VISIT…

LANZAROTE Caliente.COM

Ore Dressing

By

ROBERT H. RICHARDS, S.B.

Professor of Mining Engineering and Metallurgy at the Massachusetts Institute of Technology, Boston, Mass., U. S. A.

FIRST EDITION

IN TWO VOLUMES

VOL. I

New York and London

THE ENGINEERING AND MINING JOURNAL

1903.

THE NEW YORK
PUBLIC LIBRARY
304465
ASTOR, LENOX AND
TILDEN FOUNDATIONS.
R 1904 L

Copyright, 1903
by
THE ENGINEERING AND MINING JOURNAL

To
Alexander Agassiz
president of the
Calumet & Hecla Mining Company
this book is
gratefully dedicated

PREFACE.

In the use and design of machinery in all lines, America has, in the last few years, taken a leading place among the nations; that used in ore dressing is no exception to this rule. The existing authorities on this subject treat chiefly of European practice, and since the time of their publication, new researches have been made, revising and throwing light upon the laws governing separation. On all these accounts, therefore, the present seems an opportune time for the appearance of a work on ore dressing.

The aim of the author has been to present to the reader the modern American practice, referring for comparison to the European; and to so expound the principles of the art, as at present understood, as to make advances easy in the future. In making the book he has had in mind the student, the teacher, the expert, the mill man and the manufacturer.

The ground covered by the book includes the mechanical preparation of useful minerals other than coal. The cleaning of coal calls for a distinct and specialized treatment requiring on the part of the author added travel, experiment, study and correspondence, so much so that, although the underlying principles of treating coal are largely the same as those of other minerals, the added time required would have postponed the appearance of the book much beyond the date which to both author and publisher already seems extremely tardy. Hydraulicking, although a branch of mineral dressing, is omitted because it is well treated in the work by A. J. Bowie. Gold milling has been less dwelt upon for two reasons: (1) the excellent works of Lock, Louis, Rickard and Rose, taken together, have placed in the hands of the reader a very complete treatment of the subject; (2) an exhaustive treatment of amalgamation appears to belong more to metallurgy than to ore dressing.

The dividing line between metallurgy and ore dressing is that between chemical and mechanical treatment, the smelter dealing with chemical reactions and the mill man only with physical phenomena. There are several reasons, however, why it is difficult to exclude amalgamation from a book on ore dressing, although the formation of the amalgam alloys may be claimed by the metallurgist. First, the amalgamated plate and the treatment of amalgam are the only subjects in the gold mill whose place in a book on ore dressing can be doubted, but it would not be wise to describe all the other parts of the gold mill and refer the reader to metallurgy for the plate amalgamation; second, the amalgamating pan is the only doubtful object in a "combination" silver mill. The argument for putting it in is the same as that in regard to the amalgamated plate above mentioned. The Washoe process is but briefly referred to because it is generally classed as a metallurgical process.

The sources from which the information has been derived are: personal visits to the mills, correspondence with the mill men and the manufacturers of mill machinery, the laboratory and the literature. The author wishes especially to express his gratitude to mill owners and managers and to the manufacturers of machinery for the warm interest they have taken in making contributions to the book. He would have made but a sorry showing without their help. The laboratory has been freely used for testing and revising the laws of separation, and, thereby, two settling ratios are believed to have been established, namely the free settling and the hindered settling ratios; a third, the agitation ratio,

has also been investigated to some extent; the laws of jigging have been revised; the behavior of slimes in *spitzkasten* and on the slime table have been studied. The literature from 1870 to date has been systematically reviewed.

The arrangement of the book is based on the natural division of the subject into: (*a*) severing or breaking the ores; (*b*) separating the valuable minerals from the waste. Each of these great groups also subdivides itself into preliminary, final, and auxiliary treatment. For example, where Blake breaker and rolls are used, the former is the preliminary crusher and the latter the final; and where trommels and jigs are used, the former are the preliminary and the latter the final separators. The term, auxiliary, is added for the machines used to recrush and concentrate middlings. Since hand picking yields smelting ore for shipment, this scheme places it among the final separators—a later point than is usual with other authors.

The student can intelligently study the theory of machines only after their construction and operation are understood. Therefore, wherever possible, the discussion of theory is given later than the description.

Criticism may be made upon the machines described in the chapter on fine grinders because so many of them are not used in ore dressing. The answer the author would give is that it is impossible to say at what moment any one of these machines may be needed in ore dressing, and that there is no book upon grinding to which the reader can be referred.

The efficiency of the various milling processes is very imperfectly indicated, for lack of reliable data the publication of which is authorized.

A system of numbering both mills and machines has been adopted for the convenience of the reader and the saving of space. For example, all jigs doing the same work in a mill are given the same number. Where jig No. 2 in Mill 44 is mentioned, this specifies to the reader all the jigs in that mill that are treating the product from the first spigot of the hydraulic classifier, and the reader can always inform himself as to the identity of both the mill and the jig by reference to Chapter XX. The numbers given to machines are according to a uniform system, and vary in many cases from those actually used by the mills. "Mill 44, No. 2 jig, four of them," means that there are four No. 2 jigs in parallel in the portion of the mill under consideration. In order that the reader may readily identify any mill referred to by number, a table has been placed just preceding Chapter I., which gives the name and location of each mill, together with the kind of ore treated and the capacity.

All dimensions of tanks, tubes, boxes or other hollow vessels are invariably inside measures unless otherwise stated. All slopes are measured from the horizontal. A ton everywhere indicates the short ton—2,000 pounds. All meshes of sieves are meshes to the linear inch. The dimensions of machines are generally given in feet and inches because these are best understood by American mill men. The metric system has been adopted for the holes in screens because it is well adapted to them, and mill men are already more or less familiar with the use of millimeters for this purpose. The metric units have been used in the discussion of hydraulic classifiers because of the great ease and speed with which linear measures can be transformed into volumes and weights, a facility most needed in this line of investigation. Data for computing from one system to the other, together with other useful information, are given in the appendix.

The name breaker has been adopted rather than crusher for the coarse crushers—for example, the Blake and Gates breakers—because the word crusher has a more generic meaning, and it may also be used for the fine crushing machines. The word classifier has been adopted for all the apparatus that separate grains in hydraulic currents without recourse to other mechanism, although there is

an inherent difficulty in the use of this word. Rittinger, the great leader and expounder of ore dressing, adopted *"classiren"* to signify sizing by sieves, and *"sortiren"* to signify separation by hydraulic current, but in America we have adopted the unfortunate combination of "sorting" to define the work of the "classifier"; that is to say, our name of the operation agrees with Rittinger while our name of the apparatus conflicts. The word classifier has been accepted in this work because it is universally adopted in the mills of the United States with few exceptions, namely in those of the Lake Superior copper district, where the word "separator" is used. The adoption of Anglicised foreign words has been avoided in nearly all cases, but three exceptions are made: the words *trommel, spitzkasten* and *spitzlutte* have become so universally used in the United States, particularly in the West (and they are found in French as well as in English books), that they are used in this work.

Bibliography relating to the subject of each chapter is given at the end of the chapter, the references being numbered consecutively. Wherever in the text it is desired to refer to the bibliography, a small elevated number is inserted, which corresponds to the proper number in the bibliography. The names of text-books and periodicals from which quotations are made, are given in alphabetical order at the beginning of the book, together with the abbreviations adopted.

The preparation of such a book as this is a very different problem from that of one on smelting. In the latter case the description of any one first class smelter would give lines approximately of all, from which others would differ somewhat according to the price and acidity of ores and the opinions of the managers. In the case of ore dressing, two mills of totally different construction may be treating the same minerals in different localities, but if either mill was substituted for the other it might make a complete failure. This is owing to the different modes of occurrence of the minerals, which require the mill to be especially adapted to the characters of the minerals in each case. For example, the mill used to separate galena, blende and gangue in Leadville, Colorado, would fail in Joplin, Missouri, and that in Joplin would fail in Leadville, while each is well suited to its own district.

Although eight years have elapsed since the author made his systematic visit to the mills, he has, as far as possible, kept in touch with practice by means of frequent correspondence. He has preferred to spend more time, and so make the book satisfactory, both to himself and to the reader, rather than to hurry matters and produce only an indifferent book. He has made every effort to have all data reliable, but knows that errors are likely to occur in collecting from so many sources; that in many of the mills there has been more or less change which he has not noted; that some mills have been destroyed and rebuilt; others have been superseded by the building of a new mill. Nevertheless, he believes that the conclusions drawn are reliable.

The appearance of the Wilfley table, while a most fortunate event for the cause of ore dressing, has been most unfortunate for the preparation of this book. It could not have happened at a more inopportune moment, for in the summer of 1895 the author visited nearly 100 mills, obtaining careful data from them; on returning home the data was written out in systematic form, mailed to the mill managers for their criticism and correction, and, when it had all been returned and placed on file for the preparation of the book, the first Wilfley table appeared. From that day to this it has been finding its way into the mills of almost all descriptions. Where it has been possible the author has put in the mill changes and has so indicated in the text. The appearance of the Wilfley table is an event of such importance that the book should either have been put on the market in 1896, before the first Wilfley table appeared, or have waited until 1905, when the adaptation of the mills to the newcomer would be complete.

The art of ore dressing is constantly developing, and there are many questions that require investigation. In order that future publication may present the best information, the author will be glad to receive criticisms of the present volume and suggestions for future publication. For example, mill data along almost any line will be welcomed, but particularly in the direction of efficiency of crushing and of concentration; adjustments to meet special conditions; the elements of wear, life and attendance, which contribute so largely to estimates of cost.

The author wishes again to refer to the help he has received. He is indebted to the owners and managers of the more than ninety mills which are referred to in the text, first, for the permission to examine and take notes upon their mills, and later for the careful revision of his mill notes by them; he is also indebted to the manufacturers of mining machinery of the United States who have furnished him with the latest practical information upon milling machinery. They are not mentioned here on account of their number, but their names appear in the text. Finally, he desires to thank many members of the mining profession for help which has been freely and cordially given. The number is too great for individual mention, but he is especially indebted to the following, who have lent their aid, either by critical examination of the manuscript or in making investigations upon the principles of ore dressing:

A. Agassiz, of the Calumet & Hecla Mining Company; Ms. of Steam Stamps. Earle C. Bacon, of the Farrel Foundry & Machine Company; Ms. of Breakers. M. P. Boss; Ms. of Amalgamating Pans. F. W. Bradley, of the Bunker Hill & Sullivan Mining Company; samples of sized and sorted mill products. H. E. Clifford, of the Massachusetts Institute of Technology; Ms. of Principles of Screen Sizing. Louis Derr, of the Massachusetts Institute of Technology; Ms. of Magnetic Separation. W. G. Dodd, of the Union Iron Works; Ms. of Amalgamating Pans. R. M. Edwards, of the Tamarack Mining Company; Ms. of Steam Stamps. P. W. Gates, of the Gates Iron Works; Ms. of Breakers, Rolls and Tremain Stamp. C. W. Goodale, of the Boston & Montana Mining Company; samples of sized and sorted mill products. S. I. Hallett, of the Smuggler Mining Company; Ms. on Rolls; making of jig tests; samples of sized and sorted mill products. J. E. Hardman; Ms. of Gravity Stamps and Amalgamation. H. C. Holtoff, of the Edward P. Allis Company; Ms. of Steam Stamps and of Amalgamating Pans. W. S. Hutchinson; Ms. of Gravity Stamps, Amalgamation and Classifiers. G. M. Hyams, of the Bigelow group; Ms. of Steam Stamps. Louis Janin, Jr.; Ms. of Amalgamation. E. D. Leavitt, Jr., of the Calumet & Hecla Mining Company; Ms. of Steam Stamps. H. S. Munroe, of Columbia University; Ms. of Screens. C. Q. Payne; Ms. of Magnetic Separation. Dwight Porter, of the Massachusetts Institute of Technology; Ms. of Launders. Edwin Reynolds, of the Edward P. Allis Company; Ms. of Steam Stamps and of Amalgamating Pans. Risdon Iron Works; Ms. of Amalgamating Pans. Max Rotter, of Fraser & Chalmers; Ms. of Breakers and of Amalgamating Pans. J. Sondericker, of the Massachusetts Institute of Technology; Ms. of Theory of Crushing and of Rolls. Arthur Thatcher, of the Central Lead Company; making of jig tests; samples of sized and sorted mill products. Henry A. Vezin; Ms. of Rolls.

The author has been efficiently assisted in the preparation of the book by Messrs. C. D. Demond, W. S. Hutchinson, C. E. Locke, J. B. Seager, R. H. Sweetser and W. A. Tucker, whose services he wishes especially to commend.

R. H. R.

Massachusetts Institute of Technology, Boston, Mass., August, 1903.

TABLE OF CONTENTS.

PAGES

PREFACE v

TABLE OF CONTENTS IX

LIST OF ILLUSTRATIONS XIII

LIST OF BOOKS AND PERIODICALS XIX

TABLE I.—KEY TO MILL NUMBERS XXV

CHAPTER I.—GENERAL PRINCIPLES 1-5
Comparison of ore dressing and smelting, 1. Physical properties of minerals, 2.

PART I.—BREAKING, CRUSHING AND COMMINUTING.

CHAPTER II.—PRELIMINARY CRUSHING 9-61
Blasting in the mine, 9. Calcining for friability, 9. Hand breaking, 9. Steam and drop hammers, 12. Rock breakers of the Blake type, 13. Jaw breakers with equal motion on coarse and fine lumps, 25. Breakers of the Dodge type, 28. Comparisons, 33. Spindle or gyrating breakers, 36. General considerations of breakers and comparisons, 47. Bibliography, 55.

CHAPTER III.—ROLLS 62-112
Principle and classification, 62. Sizes fed, 63. Detailed description and discussion of individual parts, 63. Width, 83. Diameter, 83. Speed, 86. Space and angle of nip, 89. Speed and angle of nip, 94. Friction, 95. Power, 97. Sizing tests, 98. Capacity, 100. Graded crushing, 103. Cost, 104. Edison's special forms of rolls, 104. Bibliography, 109.

CHAPTER IV.—STEAM, PNEUMATIC AND SPRING STAMPS 113-143
Classification of stamps, 113. Principle of steam stamps, 113. Foundations, mortar beds and sills and girders, 114. Frame, 118. Mortar, 119. Die, ring, staves and shoes, 120. Driving mechanism, 122. Shaft, pulley and guides, 128. Water, 129. Capacity, 130. Power, 131. Cost, 134. Comparison with other crushers, 134. Tremain steam stamp, 136. Pneumatic and spring stamps, 139. Bibliography, 142.

CHAPTER V.—GRAVITY STAMPS 144-230
Principle, 144. Foundation, 145. Mortar block, 145. Frames, 152. Guides, 155. Forms of frames, 156. Iron frames, 158. Mortars, 161. Screens, 167. Screen frames, 176. Chuck block and inside plates, 177. Dies, 179. Shoes, 181. Boss, 185. Stem, 187. Tappet, 188. Stamp proportions, 189. Cam shaft, 190. Cams, 191. Details of driving mechanism, 197. Setting up, 200. Resetting tappets and putting on shoes, 201. Clean up, 201. Power, 204. Cost, 205. Feeding, 207. Mercury fed, 208. Area of discharge, 209. Screen holes and sizing tests, 210. Height of discharge, 212. Number and height of drop, 215. Weight, 218. Water, 221. Advantages and disadvantages, 222. Bibliography, 223.

CHAPTER VI.—PULVERIZERS OTHER THAN GRAVITY STAMPS 231-299
Purpose, 231. Classification, 231. Arrastra, 237. Amalgamating pans, 239. Clean up pan, 250. Buhrstone, 252. Rock emery, 253. Cummings, 255. Cone, 255. Sample grinder, 256. Heberli, 257. Bogardus, 259. Ball, 260. Dodge, 262. Tustin's, 262. Clean up barrels, 264. Alsing, 266. Frisbee-Lucop, 267. Griffin centrifugal, 268. Edge runners, 269. Bryan, 271. Langley's, 274. Schranz, 274. Kinkead, 276. Huntington, 276. Narod, 282. Griffin roller, 282. Carr, 284. Sturtevant, 286. Cyclone, 288. Whelpley and Storer, 289. Vapart, 289. Bibliography, 289.

CHAPTER VII.—LAWS OF CRUSHING 300-316
Compressive strength of stone, 300. Extent of crushing desired, 303. Work required for crushing, 304. Comparisons of various machines, 313. Bibliography, 315.

PART II.—SEPARATING, CONCENTRATING OR WASHING.

PAGES

CHAPTER VIII.—PRELIMINARY WASHERS 319-335
Trough washers, 319. Log washers, 320. Wash trommels, 329. Washing pans, 333. Hydraulic giants, 333. Bibliography, 334.

CHAPTER IX.—SIZING SCREENS 336-365
Stationary screens, 336. Riddles, 341. Vibrating grizzlies, 345. Trommels, 346. Dimensions and operation, 347. Construction and details, 350. Material for screens, 354. Driving mechanism, 356. Power, 357. Water, 358. Capacity, 359. Cost, 360. Non-cylindrical trommels, 361. Concentric trommels, 362. Systems of arrangement, 364. Comparison of trommels and riddles, 364. Bibliography, 365.

CHAPTER X.—PRINCIPLES OF SCREEN SIZING 366-386
Sieve scale, 366. Percentage of opening, 369. Thickness of plate or wire, 371. Difficulties of screening, 372. Mathematical discussion of action of trommels, 373. Tests of mill work, 381. Bibliography, 384.

CHAPTER XI.—CLASSIFIERS 387-463
Definition and classification, 387. Principle of action, 387. Spigots, 388. Purpose, 389. Trough or shallow pocket hydraulic classifiers, 389. Deep pocket hydraulic classifiers, 409. Tubular hydraulic classifiers, 421. Box classifiers, 432. Surface current box classifiers, 433. Whole current box classifiers, 443. Distributing tanks, 449. Unwatering boxes, 450. Settling tanks, 450. Clarifying reservoirs, 460. Quality of work of classifiers, 461. Bibliography, 463.

CHAPTER XII.—LAWS OF CLASSIFYING BY FREE SETTLING IN WATER 464-479
Definitions and general principles, 464. Sorting tube investigation, 465. Tubular classifier investigation, 469. Rittinger's formula, 471. Wagoner's formula, 472. Investigations on fine grains, 473. Graphical representation, 475. Bibliography, 475.

CHAPTER XIII.—HAND PICKING 480-493
Introduction and general considerations, 480. In the mine, 481. In the rock house, 482. In the mill, 485. Cost, 487. Picking tables, 488. Bibliography, 492.

CHAPTER XIV.—JIGS 494-609
Principle, purpose and definitions, 494. Movable sieve hand jigs, 495. Continuous movable sieve power jigs, 499. Intermittent, 506. Fixed sieve jigs, 507. Harz, 507. Collom, 510. Modifications of Collom, 515. Various other jigs, 517. *Heberwasche*, 520. Frames, tanks, etc., 522. Plunger, 529. Connecting rods, 530. Eccentric, 531. Shaft, 532. Accelerated mechanisms, 533. Water, 537. Sieve frames, 538. Screens, 540. Feeding, 548. Drop between sieves, 549. Height of tailboard, 550. Method of running jigs, 551. Size of sieve hole, 573. Bottom bed, 573. Skimming, 576. Automatic discharges, 577. Disposal of concentrates, 586. Removal of tailings, 587. Number of sieve compartments, 588. Width of sieves, 591. Length, 592. Number of strokes, 592. Amount of throw, 594. Water, 598. Capacity, 599. Power, 602. Life, 604. Cost, 604. Labor, 604. Limits of sizes jigged, 604. Bibliography, 609.

CHAPTER XV.—LAWS OF JIGGING 610-643
Hindered settling, 610. Tubular classifier tests, 610. Pulsion jig tests, 623. Munroe's tests, 626. Suction, 627. Hoppe's tests, 630. Tests on mixed sizes, 630. Conclusions, 631. Investigations in the mills, 632. Bibliography, 639.

CHAPTER XVI.—FINE SAND AND SLIME CONCENTRATORS 644-729
Classification, 644. Frue vanner, 645. Modifications, 651. End shake vanners, 652. Comparisons, 655. Gyrating vanners, 657. Operation of vanners, 657. Capacity, 662. Power and cost, 663. Vanner testing, 664. Principle of vanner separation, 665. Side bump tables with plane surfaces, 667. Wilfley and other side jerk tables with riffled surfaces, 670. End bump tables, 680. Miscellaneous machines, 682. Slime tables, 686. Operation, 692. Belt film tables, 697. Canvas and other intermittent surface tables, 700. Building tables or buddles, 704. Experiments on film sizing, 707. Riffles, 720. Kieves, 726. Bibliography, 727.

CHAPTER XVII.—AMALGAMATION 730-789
Properties of mercury, 730. Amalgams, 730. Outside amalgamated plates, 731. Materials, 747. Treatment, 750. Proportions of gold and silver in different amalgams, 762. Distribution of amalgam, 764. Absorption of amalgam, 765. Effect of temperature, 766. Mercury wells and riffles containing mercury, 768. Mercury traps, 771. Amalgamators, 775. Cleaning amalgam, 780. Retorting, 781. Melting, 784. Care and purification of mercury, 785. Losses, 786. Bibliography, 787.

PAGES

CHAPTER XVIII.—MISCELLANEOUS PROCESSES OF SEPARATION.....790-839
Applicability of magnetic separation, 790. Design of electromagnets, 790. Classification of magnetic separators, 796. Magnetic separators using drums, 797. Magnetic separators with conveying belts, 804. Magnetic separators with ore falling in front of magnets, 812. Roasting for magnetism, 813. Pneumatic concentration, 815. Concentrators using a continuous blast of air, 816. Concentrators which project the particles through air, 818. Air jigs, 820. Advantages and disadvantages of air over water, 825. Separation by centrifugal force, 827. Roasting for porosity, 828. Heating for decrepitation, 829. Disintegration followed by screening or settling, 830. Weathering, 830. Adhesion, 831. Bibliography, 832.

PART III.—ACCESSORY APPARATUS.

CHAPTER XIX.—ACCESSORY APPARATUS.....842-885
Bins and receiving floors, 842. Samplers, 843. Automatic feeders, 853. Distributors, 857. Water regulators, 858. Conveyors, 859. Elevators, 862. Sand wheels, 864. Pumps, 868. Launders, 872. Unwaterers and driers, 879. Miscellaneous apparatus, 882. Bibliography, 884.

PART IV.—MILL PROCESSES AND MANAGEMENT.

CHAPTER XX.—SUMMARY OF PRINCIPLES AND OUTLINES OF MILLS.....889-1084
Summary of principles, 889. Combinations of principles of separation, 891. Simple jigging mills using hand jigs, 892. Plants using log washers or other similar washing devices with or without jigs, 895. Simple jigging mills using power jigs, 900. Complex jigging mills with breakers, rolls, screens, classifiers, jigs and tables or vanners, dressing blende or pyrite, 906. Complex jigging mills concentrating galena, with or without pyrite, from limestone and quartz in Southwestern Missouri, 916. Complex jigging mills concentrating the various silver and lead minerals in Colorado and Utah, 925. Complex jigging mills dressing ores of silver and lead in Idaho and in Europe, 936. Complex jigging mills dressing argentiferous copper sulphides in Montana, 973. Steam stamp mills concentrating copper sulphides in Montana, 984. Complex jigging mills dressing native copper at Lake Superior, using steam stamps, classifiers, jigs and tables, 990. Mills using fine crushing and riffle tables of the Wilfley type, 1004. Plants working for gold by hydraulicking or dredging, 1006. Gold mills with gravity stamps and vanners but with no amalgamated plates, 1014. Gold mills with gravity stamps and amalgamated plates but no vanners, 1017. Gold mills with gravity stamps, amalgamated plates and vanners, 1018. Gold mills using gravity stamps, amalgamated plates and vanners, and canvas or blanket tables, 1029. Gold mill with gravity stamps and canvas tables, 1038. The arrastra, 1039. Silver mills wet or dry, 1039. Silver combination mills combining gold mills and wet silver mills or Washoe process, 1039. Gold combination mills combining complex jigging mills and gold mills, 1046. Mills using magnetism as the chief or only means of separating the valuable minerals from the waste, 1053. Magnetic combination mills, 1060. Mills not previously classified, 1069. Bibliography, 1084.

CHAPTER XXI.—GENERAL IDEAS ON MILLING.....1085-1186
Location of mills and mill site, 1085. Plant, 1087. Construction of buildings, 1088. Power, 1089. Power transmission, 1093. Design of machines, 1096. Lubrication and care of journals, 1097. Heating, 1098. Ventilation, 1099. Lighting, 1100. Labor, 1101. Water, 1102. Arrangement of machines, 1107. Storing and shipping concentrates, 1112. Disposal of tailings, 1113. Care of mills, 1114. Percentage of extraction, 1115. Limit of concentration, 1118. Tendency and future, 1119. Treatment of middlings, 1121. Accounts and reports, 1122. Cost of erecting mills, 1124. Cost of milling and also of mining, 1126. Testing, 1136. Tools and methods, 1137. Testing for a process, general methods, 1161. Regular mill testing of the machines, 1168. Bibliography, 1173.

APPENDIX.....1187-1197
Equivalents of weights and measures, 1187. Atomic weights, 1188. Specific gravities of minerals and common metals, 1188. Weight of broken ore, 1190. Table for converting slope in degrees to slope in inches, 1191. Gauges for wire and plate, 1194. Value of meshes in screen sizes, 1196. Miner's inch measure, 1197. Hydraulic tables, 1197. Bibliography, 1197.

INDEX.....1199

LIST OF ILLUSTRATIONS.

FIGURES.		PAGES
1 to 4.	Hand Sledges	10
5 to 10.	Blake Breakers, made by the Farrel Foundry and Machine Co.	14 to 18
11.	Section of the Blake Challenge Breaker	19
12.	Monarch (Blake Type) Breaker, made by T. A. Blake	20
13.	Section of a 9x13-inch Blake Breaker of the Lever Pattern	22
14.	New Buchanan Breaker	25
15.	Plan of Forster Breaker	28
16.	Section of the Blake Multiple-Jaw Breaker	29
17 and 18.	The Dodge Breaker	29 and 30
19.	Section of Krom's Standard Rock Breaker	31
20.	Section of the Schranz Breaker	32
21.	Sturtevant Breaker	32
22.	Movements on the Blake Breaker made by the Farrel Foundry and Machine Co	34
23.	Movements on the Dodge Breaker made by the Parke and Lacy Co	34
24.	Hopper on Dodge Breaker	34
25 and 26.	Comet Breaker	40 to 43
27 to 33.	Gates Breaker	37 and 39
34.	Section of the McCully Breaker	43
35.	Action of the Gates Breaker	52
36.	Principle of Rolls	62
37.	Krom's Method of Attaching Roll Shells	66
38.	Arrangement of Emery Block	70
39.	Rolls with Lever and Weight	73
40.	Section of Roger's Rolls	75
41.	Method of Applying Scrapers	75
42 to 47.	Designs of Rolls	75 and 77
48*a* to 48*e*.	Fraser & Chalmers' Finger-geared Rolls	78
49*a* to 49*d*.	"High Grade," "Economic" and "Sectional" Rolls	79 to 81
50.	Kroms Belted Rolls	82
51.	The Allis Reliance Crushing Rolls	82
52*a* and 52*b*.	Vezin's 20x12-inch Rolls made by the Colorado Iron Works.	84 and 85
53 to 59.	Angle of Nip (of Rolls)	89 and 94
60 to 62*b*.	Edison's Giant Rolls	105
63.	Method of driving Edison's No. 3 Rolls	106
64*a* and 64*b*.	Edison's Three-high Rolls	107
65.	Ball Steam Stamp	114
66*a* to 66*c*.	Leavitt Steam Stamp	115
67.	Allis Steam Stamp	116
68.	Union Iron Works Steam Stamp	117
69.	Mortar Bed of Fraser & Chalmers Stamp	119
70.	Mortar Bed of Leavitt Stamp	119
71.	Spring Timber in Mill 43	119
72.	Section of Top of Housing (in Stamps)	119
73*a* and 73*b*.	Steam Stamp Shoe	122
74.	Ball Steam Stamp Cylinder	124
75.	Leavitt Steam Stamp Cylinder	124
76.	Valve Motion for Leavitt Stamp	124
77.	Section of Valves for Allis Stamp	125
78.	Section of Cylinder and Piston of Allis Stamp	126
79.	Dash Pot for Leavitt Stamp	126
80.	Stamp Shaft and Shoe of the Allis Stamp	128
81 to 87.	Indicator Cards and Velocity Cards of Steam Stamps	130 to 133
88*a* and 88*b*.	Tremain Stamp	137
89*a* and 89*b*.	Phœnix Atmospheric Stamp	140
90 to 91*b*.	Gravity Stamps	144 to 147
92.	North Star Stamp Mill	149
93.	Section of Mortar Block	149

FIGURES		PAGES
94.	Concrete Mortar Block at the Banner Mine	149
95*a* and 95*b*.	Hall Stamp Mill used in the Dahlonega District, Georgia	150 and 151
96.	A Gilpin County (Colorado) Stamp Mill	152
97.	Plain Wooden Guides	154
98.	Sectional Guides of Wood and Cast Iron	154
99.	Acme Guide	154
100*a* and 100*b*.	Fargo Guides	154
101.	Allis Guide	155
102 to 109.	Wooden Frames	157 and 159
110.	Iron Stamp Frame	160
111*a* to 111*c*.	Homestake Mortar	160
112*a* to 112*c*.	North Star Mortar	161 and 162
113*a* to 113*c*.	Oldham Mortar	162
114*a* and 114*b*.	Newton Mortar	163
115.	Double Discharge Mortar	163
116*a* and 116*b*.	Sectional Mortar	163
117 to 120.	Punched Screens	167 and 168
121.	Front of Mortar, showing Screen in Place	176
122 and 123.	Chuck Blocks	178
124 and 125.	Dies	179
126.	Shoe	180
127.	Worn Shoe and Die	184
128 and 129.	Boss	185 and 186
130.	Staves on Shoe Shank	186
131.	Stamp Stem	188
132.	Section of Tappet	188
133.	Cam Shaft for Ten Stamps	190
134 and 135.	Bearings	191
136*a* and 136*b*.	Cam	191
137 to 139.	Tools for Cams	193
140 and 141.	Blanton Cams and Cam Shafts	193 and 194
142.	Lateral Thrust	195
143 and 144.	Right and Left Hand Cams	195
145.	Cam Curve	195
146.	Driving Mechanism at Mill 77	198
147.	Jets for Mortar	200
148.	Utica Cam Stick	200
149 and 150.	Grips	200
151.	Two Stamp Mill	210
152 and 153.	Stay Battery and Overflow Battery	214
154 and 155.	Orders of Drop	214
156 and 157.	Stamp Cards	217
158.	Section of Arrastra at Mill 81	238
159*a* to 162.	Amalgamating Pans	240 to 247
163 and 164.	Clean Up Pans	251
165 and 166.	Buhrstone Mill	252 and 253
167 and 168.	Rock Emery Mill	254
169*a* and 169*b*.	Cone Mill	256
170.	Sample Grinder	256
171*a* and 171*b*.	Heberli Mill, made by Fraser & Chalmers	258
172*a* and 172*b*.	Grüson Ball Mill	261
173*a* and 173*b*.	Tustin's Rotary Pulverizing Mill	263
174.	Clean Up Barrel	264
175.	Cross Section through Center of Frisbee Lucop Mill	267
176.	Griffin Centrifugal Stamp Mill, with Front Case and Screen Removed	268
177.	Section of Chili Mill	270
178.	Perspective View of Bryan Mill, with the Screens and Part of Casing Removed	272
179*a* and 179*b*.	Schranz Mill	275
180.	Half Elevation and Half Section of Kinkead Mill	277
181*a* and 181b.	Huntington Mill	279
182.	Sectional View of 30-inch Griffin Mill Arranged for Dry Pulverizing	283
183*a* and 183*b*.	Stedman Disintegrator	285
184.	Half Section and Half Elevation of the Sturtevant Mill	287
185 and 186.	Diagrams of Divided Cube	304

FIGURES		PAGES
187.	Diagram of Sizing Tests of the Products of Tustin Mill and of Stamps	309
188.	Diagram of Crushing Tests	310
189.	Diagram of Distance Between Rolls for Various Angles	311
190.	Log Washer Blades Used at Mill 25	321
191*a* to 192*c*.	Longdale Log Washer	322 and 323
193 to 196.	McLanahan's Log Washers	324 to 326
197.	Haskell's Log with Blades Attached	327
198.	Ball's "Revolving Knife Buddle"	328
199 to 202.	Wash Trommels	330 to 332
203.	Monitor Hydraulic Giant	333
204.	Haskell's Jet Washer	334
205.	Grizzly or Bar Screen	336
206.	Method of Supporting Grizzlies	337
207.	Grizzly Bars at Mill 44	337
208.	A Method of Supporting Round Grizzly Bars	338
209 to 212.	Cross Sections of Special Grizzly Bars	338
213.	Elevation of Grizzly Made of Inverted Rails	338
214.	Cross Section through a Double Bank of Edison Screens	341
215.	Columbian Pulsating Screen with Cover Raised	343
216.	Coxe Gyrating Screen	344
217.	Vibrating Grizzly at Mill 42	346
218.	A Series of Trommels Driven by Toothed Gears	348
219.	Sheet Iron Trommel Housing	348
220.	A Trommel without Internal Shaft	351
221.	Detail of Shaft and Spider for a Trommel	352
222.	Attachment of Trommel Screen	355
223.	Detail of a Hoop Tightener for a Trommel	355
224.	Schmidt Spiral Screen	363
225 to 228.	Plans and Side Elevations of Trommels	365
229.	Elongated Punched Screen Holes	370
230 and 231.	Centrifugal Force (in Trommels)	375
232.	Angle of Helical Path of Particle of Ore over Trommel	375
233.	Flanged Thimbles in Spigot Pipe in Mill 28	388
234*a* to 234*d*.	Richards-Coggin Hydraulic Classifier	391
235*a* to 235*c*.	Evans Hydraulic Classifier	394
236*a* to 236*c*.	Anaconda Hydraulic Classifier	395
237*a* and 237*b*.	Tamarack Classifier	397
238*a* to 238*c*.	Dalton Classifier	398
239*a* to 239*c*.	Yeatman Classifier	399
240*a* to 240*c*.	No. 1 Hydraulic Classifier at Mill 22	399
241*a* to 242*c*.	No. 1 and No. 2 Hydraulic Classifiers in Mill 17	400
243.	Section of the Ferraris Classifier	400
244*a* to 244*h*.	Richards Hydraulic Classifiers	402 to 407
245*a* and 245*b*.	Browne Hydrometric Conical Sizer	408
246.	Section of No. 1 Hydraulic Classifier in Mill 18	411
247*a* to 247*c*.	No. 2 Hydraulic Classifier in Mill 85	411
248*a* to 248*c*.	A Hydraulic Classifier from Linkenbach	412
249*a* to 249*c*.	No. 1 Hydraulic Classifier in Mill 21	413
250.	Section of No. 1 Hydraulic Classifier in Mill 87	413
251*a* to 251*c*.	No. 1 Hydraulic Classifier in Mill 24	414
252*a* to 253*c*.	No. 1 and No. 3 Hydraulic Classifiers in Mill 88	415
254*a* to 254*c*.	A Hydraulic Classifier from Linkenbach	417
255*a* and 255*b*.	The Carkeek Classifier	417
256*a* to 256*c*.	G. G. Gates Hydraulic Classifier	418
257*a* to 257*c*.	No. 1 Hydraulic Classifier in Mill 86	419
258*a* to 258*c*.	No. 1 Hydraulic Classifier in Mill 30	420
259.	Longitudinal Section of No. 1 Hydraulic Classifier in Mill 20	421
260*a* to 261*b*.	Rittinger *Spitzlutten*	422 and 423
262*a* and 262*b*.	Meinecke *Spitzlutte*	425
263.	Section of the Boss Classifier	426
264.	Double Cone Classifier	426
265.	Plan of No. 1 Hydraulic Classifier in Mill 19	427
266*a* and 266*b*.	Charleton Classifier	428
267*a* to 268*b*.	Richards Tubular Classifiers	428
269*a* and 269*b*.	Meinecke Classifier	430 and 431
270 to 273.	Currents in *Spitzkasten*	435 and 436
274*a* to 278*b*.	Rittinger's *Spitzkasten* Apparatus	438 and 439

FIGURES		PAGES
279.	Arrangement of Collecting Launders for Spigots	443
280.	Sketch of Erskine Ramsey Sludge Tank	446
281*a* and 281*b*.	Büttgenbach's Separator	447
282 to 284	Diagrams of Settling Tanks	452
285*a* and 285*b*.	Baffle Board Settling Tank	459
286.	Sorting Tube	467
287.	Curves of Free Settling Grains on Logarithmic Paper	468
288.	Tubular Classifier	470
289.	Actual and Computed Curves of Fall	473
290.	Graphical Representation of Free Settling	475
291 to 294.	Rock Houses	483 and 484
295 to 297.	Picking Tables	488 to 491
298*a* to 300*d*.	Hand Jigs	495 to 497
301*a* and 301*b*.	Movable Sieve Jig at Przibram	500
302*a* to 302*d*.	Bradford Eccentric Jig	501
303*a* to 303*d*.	Jig and Rakes at Mill 4	502
304.	Section of Conkling Movable Sieve Jig	503
305*a* to 305*e*.	Hancock Jig	505
306*a* to 306*i*.	4-compartment Double Harz Jig at Mill 37	508 to 513
307.	Section of Two-Sieve Harz Jig of Mill 37	513
308*a* to 309.	Collom Jig	514 and 515
310*a* and 310*b*.	Dudley Spring at Mill 13	516
311.	Evans Jig Mechanism	516
312*a* to 312*d*.	The Parsons and Fisher Jig	516
313.	Longitudinal Vertical Section of McLanahan's Jig and Tank	518
314.	End View of the Baum Jig	519
315*a* to 315*c*.	The Siphon Separator (*Heberwäsche*)	521
316 to 321.	Development of Modern Jig	523
322.	Spigot at Mill 13	528
323*a* and 323*b*.	Eccentric and Connecting Rod in Mill 30	531
324.	Double Jig with One Shaft	531
325*a* to 328.	Accelerated Mechanism for Jigs	533 to 536
329.	Bar for Supporting Jigging Sieve	539
330.	Section of the Ferraris Intermediate Jig	539
331.	Cast Iron Sieve at Mill 16	545
332 and 333.	Height of Tailboard	550
334 to 335*c*.	Gate and Dam Discharges	577 and 580
336.	Heberli Discharge	581
337.	Longitudinal Section of Jig at Clausthal	581
338*a* and 338*b*.	Osterspey Discharge	582
339.	Atmospheric Discharge	583
340.	Pipe Discharge in Mill 28	583
341*a* to 342*b*.	Stay Boxes for Jigs	585
343.	Copper Boxes of Mill 48	586
344.	Unwatering Screen in Mill 27	588
345.	Tubular Classifier	611
346 to 357.	Separation of Quartz from Various Minerals by Tubular Classifier and Sieves	611 to 622
358.	Graphical Representation of Hindered Settling	623
359.	Reversible Free Fall Tube	623
360.	Pulsion Jig	623
361 and 362.	Separation of Quartz from Galena and from Sphalerite by Pulsion Jig and Sieves	624 and 625
363.	Falling Spheres	626
364.	Interstitial Fall	626
365.	Imaginary Tubes of Interstitial Fall	626
366.	Movable Sieve Jig	627
367.	Interstitial Ratio	630
368.	Jig Indicator	632
369 to 380.	Indicator Cards of Jigs	633 to 637
381.	Frue Vanner	649
382 and 383.	Vanner Belts	647
384*a* and 384*b*.	Union Vanner	651
385.	Triumph Vanner	652
386.	Embrey Vanner	654
387.	Feeder for Woodbury Vanner	655
388 and 389.	Indicator Cards of Vanners	657

FIGURES		PAGES
390.	Plot of Sizing Tests to Determine an Agitation Ratio for Vanners	666
391.	Bilharz Table	669
392a to 393.	Wilfley Table	671 to 673
394.	Hallett Table	675
395a and 395b.	Cammett Table	677
396a and 396b.	Bartlett Table	678
397.	Diagram of Behavior of Feed on Wilfley Table	678
398.	Mechanical Batea	685
399a and 399b.	Three-Deck Slime Table at Mill 37	686 and 687
400a and 400b.	Linkenbach Slime Table	690
401a to 402.	Canvas Plant, Distributor and Launders at Mill 78	699
403a and 403b.	Convex Buddle	705
404a and 404b.	Rectangular Buddle	706
405 to 411.	Finish Angles of Quartz and Galena	708 to 714
412.	Average Velocities of Currents on a Sizing Surface	716
413.	Height of Wave on a Sizing Surface	717
414a to 417.	Riffles	721 and 722
418.	Cradle or Rocker with Part of Side Cut Away	722
419 to 422.	Riffles	724 and 725
423.	Kieve	726
424.	Section of the Oldham Mill	732
425a and 425b.	Plates at Mill 64	734
426.	Stirrups at Mill 86	735
427.	Newer Apron and Sluices at Mill 57	736
428.	Fastener at Mill 67	735
429.	First Plates of Mill 67	740
430.	Arrangement of Plates at the Cross Mill, Gunnison County, Colorado	741
431a and 431b.	Plates in the Gover Mill	742
432.	Clayton's Scheme of Drops	742
433 and 434.	Shape of Wave on Plate	747
435.	Plan of Silver Plating Vat	755
436.	Scraper	758
437 to 440.	Mercury Wells	769 and 770
441 and 442.	Riffles Containing Mercury	770 and 772
443 to 445.	Mercury Traps	773 and 774
446a and 446b.	Atwood Amalgamator	775
447a to 447c.	Eureka Rubber	776
448.	Section of the Laszlo Amalgamator	776
449.	Section of Settler	778
450.	Sketch of Pans and Settlers in Mill 83	778
451.	Section of Agitator	779
452.	Section of Cylindrical Retort and Furnace	782
453.	Pot Retort	782
454 to 456.	Magnetic Lines around Magnets	791
457.	Curves of Permeability of Different Kinds of Iron	793
458.	Electromagnet Used for Leakage Experiments	793
459.	Ball-Norton Electromagnetic Separator	797
460.	Section of the Heberli Dry Magnetic Separator	799
461a to 462b.	Payne Magnetic Separators	800 and 801
463a and 463b.	Wenstrom Magnetic Separator	802
464.	Buchanan Magnetic Separator	803
465.	Section of the Dellvik-Gröndal Magnetic Separator	804
466a to 468c.	Wetherill Magnetic Separators	805 to 808
469.	Principle of the Conkling Dry Magnetic Separator	809
470a to 470c.	Heberli Wet Separator	811
471a to 472b.	Edison's Separators	811 and 812
473.	Edison's Dusting Chamber	816
474.	Section of the Hochstedt Apparatus	817
475.	Section of Mumford and Moodie's Separator	818
476a and 476b.	Pape-Henneberg Separator	819
477a and 477b.	Hooper Pneumatic Concentrator	821
478a to 478c.	Krom's Pneumatic Jig	823 and 824
479.	Centrifugal Separator	827
480 to 484.	Samplers	845 and 847
485.	Sizes and Weights of Ore for Sampling	851
486 to 491.	Ore Feeders	853 to 856

FIGURES		PAGES
492 and 493.	Distributors	856 and 858
494 to 497.	Rollers for Rubber Belts	859
498.	Calumet and Hecla Sand Wheel	867
499 to 501.	Sand Pumps	868 and 871
502 to 508	Launders	873 and 876
509.	Johnson's Mechanical Sand Shoveller	879
510*a* and 510*b*.	Edison Drier	881
511.	Mill 10	901
512*a* to 512*d*.	Mill 22	918 and 919
513*a* and 513*b*.	Mill 25	923
514.	Mill 27	928 and 929
515*a* and 515*b*.	Mill 34	948 and 949
516*a* to 516*g*.	Mill 37	952 to 958
517*a* and 517*b*.	Mill at Laurenburg	962
518*a* and 518*b*.	Ore Dressing Works at Clausthal	965
519*a* and 519*b*.	Mill 40	980 and 981
520.	Mill 48	1002
521*a* and 521*b*.	Bucyrus Gold Dredge	1010 and 1011
522*a* and 522*b*.	Mill 84	1042 and 1043
523*a* and 523*b*.	Mill 92	1063
524*a* to 524*e*.	Mill 94	1070 to 1073
525.	Section of a Basin Washer	1076
526.	Silberau Mill at Ems	1087
527*a* and 527*b*.	Himmelfahrt Mill	1087
528.	Idler	1094
529.	Edison's Oiling Device	1098
530 and 531.	Vezin's Dust-proofing Device	1099
532.	Testing Screens	1137
533 to 543.	Plots of Sizing Tests	1139 to 1144
544 to 546.	Classifiers for Testing	1145 and 1146
547*a* to 547*d*.	Vezin's Testing Jig	1150
548 and 549.	Vanning Shovels	1151
550.	Vanning Plaque	1152
551.	Gold Miners' Pan	1152
552.	Batea	1152
553*a* to 553*d*.	Jerking Table for Testing	1153
554*a* to 555*c*.	Rectangular Slime Tables for Testing	1154 and 1155
556 to 558*d*.	Amalgamating Apparatus for Testing	1157 and 1158
559*a* and 559*d*.	Film Gauge	1159
560.	Hand Sampler for Slime Tables	1172

LIST OF BOOKS AND PERIODICALS REFERRED TO IN THIS BOOK.

Books.

Aaron, C. H. "Leaching Gold and Silver Ores." Leary, San Francisco, California, 1881.

Adams, W. J. "Hints on Amalgamation and the General Care of Gold Mills." Modern Machinery Publishing Company, Chicago, Illinois, 1899.

Bilharz, O. "Die Mechanische Aufbereitung von Erzen und Mineralischer Kohle, in Ihrer Anwendung auf Typische Vorkommen." Arthur Felix, Leipzig. Vol. I., 1896; Vol. II., 1898.

Bowie, A. J., Jr. "A Practical Treatise on Hydraulic Mining in California." D. Van Nostrand, New York, 1885.

Callon, J. "Lectures on Mining Delivered at the School of Mines, Paris." Translated by C. LeN. Foster and W. Galloway. Dulau & Company, London; Dunod, Paris. Vol. I., 1876; Vol. II., 1881; Vol. III., 1886.

Charleton, A. G. "Charleton's Cost Sheet Forms. For the Use of Mining Companies." Howard & Jones, London, 1884.

Charleton, A. G. "Tin: Describing the Chief Methods of Mining, Dressing and Smelting It Abroad." E. & F. N. Spon, London and New York, 1884.

Clark, D. K. "A Manual of Rules, Tables, and Data for Mechanical Engineers." Blackie & Son, London, 1891.

Collins, H. F. "The Metallurgy of Lead and Silver." Charles Griffin & Company, London. Part I., 1899; Part II., 1900.

Dana, E. S. "A System of Mineralogy. Descriptive Mineralogy." John Wiley & Sons, New York, 1898.

Davies, D. C. "A Treatise on Earthy and Other Minerals and Mining." Crosby Lockwood & Son, London, 1888.

Davies, D. C. "A Treatise on Metalliferous Minerals and Mining." Crosby Lockwood & Company, London, 1886.

Davies, E. H. "Machinery for Metalliferous Mines." Crosby Lockwood & Son, London, 1894. There is a later enlarged edition, 1902.

Dubuat, M. "Principes d'Hydraulique et de Pyrodynamique." Firmin Didot, Paris. Vol. I. and II., 1816.

Dummler, K. "Handbuch der Ziegel Fabrikation," Part II. Knapp, Halle-an-der-Saale, Germany, 1899.

Egleston, T. "The Metallurgy of Silver, Gold and Mercury in the United States." John Wiley & Sons, New York. Vol. I., Silver, 1887. Vol. II., Gold and Mercury, 1890.

Eissler, M. "The Metallurgy of Gold." Crosby Lockwood & Son, London, 1896. There is a later enlarged edition, 1900.

Eissler, M. "The Metallurgy of Silver." Crosby Lockwood & Son, London, 1891.

Evans, G. H. "Notes on Hydraulic Mining." McNutt, Kahn & Company, San Francisco, California, 1898.

Ferrand, Paul. "L'Or à Minas Geraes (Brésil)." Ouro Preto, Vol. II., 1894.

Foster, C. LeN. "A Text-Book of Ore and Stone Mining." J. P. Lippincott Company, Philadelphia, 1894.

Furman, H. Van F. "A Manual of Practical Assaying." John Wiley & Sons, New York, 1899.

Gaetzschmann, M. F. "Aufbereitung." Arthur Felix, Leipzig. Vol I., 1864; Vol. II., 1872.

Goupillière, Haton de la. "Cours D'Exploitation des Mines." Dunod, Paris. Tome II., 1885. There is a later enlarged edition, 1897.

Hatch, F. H. and Chalmers, J. A. "The Gold Mines of the Rand." The Macmillan Company, London, 1895.

Hering, Carl. "Table of Equivalents of Units of Measurement." W. J. Johnston, New York, 1888.

Hering, R. and Trautwine, J. C., Jr. "A General Formula for the Uniform Flow of Water in Rivers and Other Channels." (Translated from the German with additions.) J. Wiley & Sons, New York, 1889.

Hofman, H. O. "The Metallurgy of Lead and the Desilverization of Base Bullion." The Scientific Publishing Company, New York and London, 1899.

Hunt, R. "British Mining." Crosby Lockwood & Company, London, 1884.

Hurst, Geo. H. "Painters' Colours, Oils and Varnishes." Charles Griffin & Company, Limited, London, 1896.
Kent, William. "The Mechanical Engineer's Pocket-Book." John Wiley & Sons, New York, 1895.
King, Clarence. "United States Geological Exploration of the Fortieth Parallel." Government Printing Office, Washington. Vol. III., 1870.
Kirschner, L. "Grundriss der Erzaufbereitung." Franc Deuticke, Leipzig and Vienna. Part I., 1898; Part II., 1899.
Kunhardt, W. B. "The Practice of Ore Dressing in Europe." John Wiley & Sons, New York, 1893.
Lamprecht, R. "Die Kohlen-Aufbereitung." Arthur Felix, Leipzig, 1888.
Landolt and Bornstein. "Physikalische Chemische Tabellen." Springer, Berlin, 1894.
Linkenbach, C. "Die Aufbereitung der Erze." Julius Springer, Berlin, 1887.
Lock, A. G. "Gold: Its Occurrence and Extraction." E. & F. N. Spon, London and New York, 1882.
Lock, C. G. W. "Gold Milling, Principles and Practice." E. & F. N. Spon, London, 1901.
Longridge, C. C. "Hydraulic Mining." Mining Journal, London. Part I., 1899; Part II., 1900; Part III., 1902.
Louis, H. "A Handbook of Gold Milling." The Macmillan Company, New York, 1894. There is a later edition, 1899.
Luquer, L. M. "Minerals in Rock Sections." Van Nostrand, New York, 1898.
McDermott, W. and Duffield, P. W. "Losses in Gold Amalgamation." Fraser & Chalmers, Chicago, 1890.
McDonald, B. "Skeleton Mining Report." American Developing and Mining Company, Butte, 1894.
Neubert, E. W. and Bilharz, O., in "Freibergs Berg. u. Hüttenwesen." Cratz, Freiberg, 1883 (1st edition), 1893 (2nd edition).
Peters, E. D., Jr. "Modern Copper Smelting." The Scientific Publishing Company, New York, 1895.
Phillips, J. A. "Elements of Metallurgy." New Edition by J. A. Phillips and H. Bauerman. Charles Griffin & Company, London, 1887.
Rickard, T. A. "The Stamp Milling of Gold Ores." The Scientific Publishing Company, New York, 1897.
Rittinger, P. R. Von. "Lehrbuch der Aufbereitungskunde." Von Ernst & Korn, Berlin, 1867.
Rittinger, P. R. Von. "Erster Nachtrag zum Lehrbuch der Aufbereitungskunde." Von Ernst & Korn, Berlin, 1870.
Rittinger, P. R. Von. "Zweiter Nachtrag zum Lehrbuch der Aufbereitungskunde." Von Ernst & Korn, Berlin, 1873.
Rose, T. K. "The Metallurgy of Gold." Charles Griffin & Company, London, 1894. There is a later enlarged edition, 1902.
Schnabel, C. "Handbuch der Metallhüttenkunde." Julius Springer, Berlin, Vol. I., 1894; Vol. II., 1896. Translation by Henry Louis. The Macmillan Company, London, 1898.
Smith, Oberlin. "Press Working of Metals." John Wiley & Sons, New York, 1896.
Sparre, J. von. "Zur Theorie der Separation." Ad. Spaarmann, Oberhausen, Germany, 1869.
Stahl, A. W. "Transmission of Power by Wire Ropes." Van Nostrand, New York, 1893.
Stetefeldt, C. A. "The Lixiviation of Silver Ores with Hyposulphite Solutions." The Author, 1895.
Terry, G. "Pigments, Paint and Painting." E. & F. N. Spon, London, 1893.
Thompson, S. P. "Lectures on the Electromagnet." The W. J. Johnston Company, Limited, New York, 1891.
Trautwine, J. C., Jr. "The Civil Engineer's Pocket-Book." John Wiley & Sons, New York, 1895.
Ulzer, F. and Fraenkel, A. "Introduction to Chemical-Technical Analysis." Translated by H. Fleck. P. Blakiston's Son & Company, Philadelphia, 1898.
Unwin, W. C. "Development and Transmission of Power." Longmans, Green & Company, London, 1894.
Wedding, H. "Ausführliches Handbuch der Eisenhüttenkunde." Friedrich Vieweg und Sohn, Braunschweig, Germany. Vol. I., 1891-6; Vol. II., 1897-1900.
Weisbach, P. J. "Manual of the Mechanics of Engineering and of the Construction of Machines." John Wiley & Sons, New York, Vol. II., 1877.
Wiley, H. W. "Principles and Practice of Agricultural Analysis," (monthly parts). Chemical Publishing Company, Easton, Pennsylvania. Vol. I., 1894; Vol. II., 1895; Vol. III., 1897.
Zirkler, H. in "Das Berg.-und Hüttenwesen des Oberharzes." Ferdinand Enke, Stuttgart, Germany, 1895.

Periodicals.

Ala. Geol. Survey=Geological Survey of Alabama. Irregularly. Montgomery, Alabama. State publication.

Ala. Ind. & Sci. Soc.=Alabama Industrial and Scientific Society. Annually. Tuscaloosa, Alabama.

Am. Assoc. Adv. Sci.=Proceedings of the American Association for the Advancement of Science. Annually. By the Secretary.

Am. Chem. Soc.=Journal of the American Chemical Society. Monthly. New York.

Am. Eng. & R. R. Jour.=American Engineering and Railroad Journal. Monthly. New York.

Am. Inst. Min. Eng.=Transactions of the American Institute of Mining Engineers. Annually. New York.

Am. Jour. Science=American Journal of Science. Monthly. New Haven, Connecticut.

Am. Mfr.=American Manufacturer and Iron World. Weekly. Pittsburg, Pennsylvania. Pittsburg National Iron and Steel Publishing Company.

Am. Soc. Civ. Eng.=Transactions of the American Society of Civil Engineers. Monthly; semi-annually from Vol. XXXV. New York.

Am. Soc. Mech. Eng.=American Society of Mechanical Engineers. Semi-annually. New York.

Ann. des Mines=Annales des Mines. Monthly. Paris. Ch. Dunod.

Ann. f. Gewerbe u. Bauwesen=Annalen für Gewerbe und Bauwesen. Semi-monthly. Berlin. Glaser.

Ass. Eng. Soc.=Journal of the Association of Engineering Societies. Monthly. Philadelphia, Pennsylvania.

Austr. Inst. Min. Eng.=Transactions of the Australasian Institute of Mining Engineers. Annually. Melbourne, Australia.

Austr. Min. Standard=Australian Mining Standard, Electrical Record and Financial Review. Weekly. Melbourne, Australia. Critchley Parker.

Berg. u. Hütt. Jahrb.=Berg- und Hüttenmännisches Jahrbuch. Quarterly. Vienna. Manz.

Berg. u. HüttenWesen des Oberharzes. This is really not a periodical. See Zirkler, H., in preceding list of books.

Berg. u. Hütt. Zeit.=Berg- und Hüttenmännische Zeitung. Weekly. Leipzig. A. Felix.

Bull. Soc. d'Encourag.=Bulletin de la Société d'Encouragement pour l'Industrie Nationale. Monthly. Paris.

Bull. Soc. Ind. Min.=Bulletin de la Société de l'Industrie Minerale. Quarterly. St. Etienne, France.

Cal. Bull.=California Mining Bureau, State Bulletin. Irregularly. Sacramento, California. State publication.

Cal. Rep.=California Mining Bureau, Annual Report of the State Mineralogist. Annually; after 1892, biennially. Sacramento, California. State Publication.

Can. Min. Inst.=Journal of the Federated Canadian Mining Institute. Vols. I-III., (1896-1898); Journal of the Canadian Mining Institute, Vol. I., (1898), to date. Annually. Ottawa, Canada.

Can. Min. Rev.=Canadian Mining Review. Monthly. Ottawa, Canada.

Cassier's Mag.=Cassier's Magazine. Monthly. London, Toronto, Bombay, Melbourne and Johannesburg. The Louis Cassier Company, Limited.

Charcoal Iron Workers=Journal of the United States Association of Charcoal Iron Workers. Bimonthly. Philadelphia, Pennsylvania.

Chem. & Met. Soc. S. Africa=Proceedings of the Chemical and Metallurgical Society of South Africa, (one volume 1894-1897); Proceedings Monthly Meeting, Jan. 15, 1898; Journal of the Chemical and Metallurgical Society of South Africa. Monthly; beginning 1898. Johannesburg.

Chem. Soc. Trans. London=Journal of the Chemical Society (of London), Transactions. Monthly. London.

Clay Worker=The Clay Worker. Monthly. Indianapolis, Indiana. T. A. Randall & Company.

Coll. Eng.=Colliery Engineer. Monthly. After Oct. 1897=Mines and Minerals. Scranton, Pennsylvania.

Coll. Guard.=The Colliery Guardian and Journal of the Coal and Iron Trades. Weekly. London.

Col. Sci. Soc.=Colorado Scientific Society. Irregularly. Denver, Colorado.

Comptes-Rendus Soc. Ind. Min.=Comptes-Rendus Mensuels des Réunions Société de l'Industrie Minérale. Monthly. St. Etienne, France.

Deut. Töpf. u. Ziegl. Zeit.=Deutsche Töpfer und Ziegler-Zeitung. Semi-weekly. Halle-an-der-Saale, Germany. Knapp.

Dingler's Polyt. Jour.=Dingler's Polytechnisches Journal. Semi-monthly. Stuttgart, Germany.
Electrical Rev.=Electrical Review. Weekly. London.
Engineering=Engineering. Weekly. London.
Eng. Mag.=The Engineering Magazine. Monthly. New York.
Eng. News=Engineering News and American Railway Journal. Weekly. New York.
Eng. & Min. Jour.=Engineering and Mining Journal. Weekly. New York.
Fed. Inst. Min. Eng.=Transactions of the Federated Institution of Mining Engineers. Irregularly. Newcastle-upon-Tyne, England.
Franklin Inst.=The Journal of the Franklin Institute. Monthly. Philadelphia. T. Rand.
Freiberger Jahrb.=Jahrbuch für das Berg- und Hüttenwesen im Königreiche Sachsen. Annually. Freiberg, Saxony. Craz & Gerlach (Joh. Stettner).
Freibergs Berg. u. Hüttenwesen. This is not a periodical. See Neubert, E. W., in preceding list of books.
Genie Civil=Le Genie Civil et la Société des Ingenieurs Civils de France. Weekly, Paris.
Gen. Min. Assoc. Quebec=Journal of the General Mining Association of the Province of Quebec. Irregularly. Ottawa, Canada.
Industrial Rev.=Industrial Review. London.
Inst. Civ. Eng.=Institution of Civil Engineers. Irregularly. London. Weale.
Inst. Mech. Eng.=Institution of Mechanical Engineers. Quarterly. London.
Inst. Min. Eng.=Institution of Mining Engineers. Monthly. Newcastle-upon-Tyne, England.
Inst. Min. & Met.=Institution of Mining and Metallurgy. Annually. London.
Iron=Iron. Weekly. London. From July, 1893, united with "Industries and Iron."
Iron Age=Iron Age. Weekly. New York. David Williams Company.
Iron & Coal Trades Rev.=Iron and Coal Trades Review. Weekly. London.
Iron & Steel Inst.=Journal of the Iron and Steel Institute. Semi-annually. London and New York. E. & F. N. Spon.
Jahrb. Geol. Reichsanstalt=Kaiserlich-Koenigliche Geologische Reichsanstalt, Jahrbuch. Annually. Vienna.
Judges Rep. on Centennial Exposition=United States Centennial Commission. International Exhibition, 1876. Reports and Awards. Nine volumes. Washington.
Kamtener Zeit.=
L. Superior Min. Inst.=Proceedings of the Lake Superior Mining Institute. Annually. By the Secretary.
McClure's Mag.=McClure's Magazine. Monthly. New York.
Mech. Mag.=Mechanics Magazine and Journal of Science, Arts and Manufacturers. Weekly. London.
Memoirs Nat. Acad. Sciences=Memoirs of the National Academy of Sciences. Irregularly. Washington.
Min. Ass. & Inst. Cornwall=Mining Association and Institute of Cornwall. Irregularly. Camborne, Cornwall.
Min. Bull.=Mining Bulletin. Bi-monthly. Pennsylvania State College.
Mines & Minerals=Mines and Minerals. Monthly. Scranton, Pennsylvania. See Colliery Engineer.
Min. Ind.=The Mineral Industry. Annually. New York. Engineering & Mining Journal Company.
Min. Ind. & Review=
Min. Jour.=Mining Journal. Weekly. London.
Min. Res. of U. S.=Mineral Resources of the United States. Annually. Washington. United States Geological Survey.
Min. Soc. N. Scotia=Journal of the Mining Society of Nova Scotia. Annually. Halifax, Nova Scotia.
Min. & Sci. Press=Mining and Scientific Press. Weekly. San Francisco, California. J. F. Halloran.
Mittheil. kglch. tech. Versuchanstalten Berlin=Mittheilungen aus dem königlichen technischen Hochschule zu Berlin. Annually. Berlin. Technischen Hochschule. Springer.
Mittheil. mech.-tech. Lab. tech. Hochschule München=Mittheilungen aus dem mechanisch-technischen Laboratorium der königlichen technischen Hochschule München. Annually. Munich. Technische Hochschule. Ackermann.
N. Carolina Geol. Survey Bull.=North Carolina Geological Survey Bulletin. Irregularly. State Publication.
N. E. Coast Inst. Eng. & Shipbuilders=Northeast Coast Institution of Engineers and Ship-builders. Annually. Newcastle-upon-Tyne, England.
New Zealand Inst. Min. Eng.=New Zealand Institute of Mining Engineers.

North Eng. Inst. Min. & Mech. Eng.=North of England Institute of Mining and Mechanical Engineers. Annually. Newcastle-upon-Tyne, England.
Oest. Zeit.=Oesterreichische Zeitschrift für Berg- und Hüttenwesen. Weekly. Vienna. G. J. Manz'schen.
Ontario Rep.=Report of the Bureau of Mines, Ontario. Annually. Toronto, Canada.
Pract.. Mech. Jour.=The Practical Mechanic's Journal. Record of the Great Exhibition, 1862. London.
Prod. Gold & Silver in U. S.=Report on the Production of the Precious Metals in the United States. Annually. Washington. Director of the Mint.
Raymond's Rep.=Commissioner of Mining Statistics, Annual Report. Annually. Washington.
Rep. Min. Insp. of N. Y.=Report of the Mining Inspector of New York.
Rev. des Mines=Revue Universelle des Mines, de la Métallurgie, des Travaux Publics, des Sciences et des Arts Appliqués a l'Industrie. Monthly. Paris. C. Borrani.
Rev. Industrielle=Revue Industrielle. Weekly. Paris.
Royal Inst. Great Britain=Proceedings of the Royal Institution of Great Britain. Annually. London.
S. Afric. Assoc. Eng. & Architects=Proceedings of the South African Association of Engineers and Architects. Annually. Johannesburg.
S. Afr. Min. Jour.=South African Mining Journal and Financial News. Weekly. Johannesburg. J. Stuart.
Sch. Mines Quart.=School of Mines Quarterly. Quarterly. New York. Columbia College.
Sci. American=Scientific American. Weekly. New York. Munn.
Sci. American Sup.=Scientific American Supplement. Weekly. New York. Munn.
Second Geol. Survey Pa.=Second Geological Survey of Pennsylvania. Irregularly. Harrisburg, Pennsylvania.
Soc. Arts Jour. London=Journal of the Society of Arts. Weekly. London. George Bell & Sons.
Soc. Chem. Ind. Jour.=Journal of the Society of Chemical Industry. Semi-monthly. London. Watson Smith.
Stahl u. Eisen=Stahl und Eisen. Monthly. Düsseldorf, Germany. A. Bagel.
Tech. Soc. Pac. Coast=Transactions (and Proceedings) of the Technical Society of the Pacific Coast. Irregularly; after Vol. X., annually. San Francisco, California.
Tenth U. S. Census=Tenth Census of the United States (1880). Washington. United States Government.
Tests at Watertown Arsenal=Report of the Tests of Metals and other Materials for Industrial Purposes made with the United States Testing Machine at Watertown Arsenal, Massachusetts. Annually. Washington. United States Government.
The Engineer=The Engineer. Weekly. London.
Thon-Ind. Zeit.=Thonindustrie Zeitung. Weekly. Berlin. Cramer.
U. S. Geol. Survey Bull.=United States Geological Survey Bulletin. Irregularly. Washington.
U. S. Geol. Survey, Min. Resources=United States Geological Survey, Mineral Resources of the United States. Annually. Washington.
Ver. Bef. Gewerbefleisses=Verhandlungen des Vereins zur Beförderung des Gewerbefleisses. Annually. Berlin. S. Simion.
Zeit. angewandte Chemie=Zeitschrift für angewandte Chemie. Semi-monthly. Berlin. F. Fischer.
Zeit. Berg- Hütt- u. Salinen-wesen.=Zeitschrift für das Berg- Hütten- und Salinen-wesen im Preussichen Staate. Bi-monthly. Berlin. William Ernst u. Sohn.
Zeit. Elektrochemie=Zeitschrift für Elektrochemie. Weekly. Halle-an-der-Saale, Germany. Wilhelm Knapp.
Zeit. Oest. Ing. Ver.=Zeitschrift des Oesterreichischen Ingenieur und Architekten Vereines. Weekly. Vienna.
Zeit. Ver. Deut. Ing.=Zeitschrift des Vereines Deutscher Ingenieure. Weekly. Berlin.

TABLE I.

KEY TO MILL NUMBERS

Mill No.	Name.	Location.	Economic Minerals.	Gangue.	Capacity per 24 Hours. Tons.
1.	Genesee-Vanderbilt Mining Company.	Guston, Colorado.	Gold and silver bearing pyrite, galena, blende and a little polybasite.	Quartz, porphyry, barite and clay.	
2.	Granby Hand Jig.	Granby, Missouri.	Blende, calamine and galena in coarse crystallization.	Quartz, flint, calcite and dolomite.	8 (*a*)
3.	Hell upon Earth.	Joplin, Missouri.	Blende and galena in coarse crystallization.	Limestone and flint.	50 (*b*)
4.	Henninger's Limonite Washer.	Trexler Town, Pennsylvania.	Limonite		
5.	Limonite Washer.	Longdale, Virginia.	Limonite, of concretionary structure.	Clay and shale with sandstone and pebbles.	800
6.	Peace River Phosphate Company	Hull, Florida.	Phosphate.	Sand.	
7.	Land Pebble Phosphate Company.	Pebble, Florida.	Phosphate.	Hard blue clay.	
8.	Dunnellon Phosphate Company.	Dunellon, Florida.	Phosphate.	Sand, clay, etc.	400 (*c*)
9.	Henry Faust.	Galena, Kansas.	(*d*)	(*d*)	60–100 (*c*)
10.	I Know Mining Company.	Joplin, Missouri.	Blende and galena.	Flint and limestone.	100–120 (*c*)
11.	Alma Emmons Sludge Mill.	Galena, Kansas.	Unfinished blende ore.	Flint and limestone.	60 (*c*)
12.	Friedensville Zinc Company.	Friedensville, Pennsylvania.	Blende.	Limestone, quartz.	120–135 (*c*)
13.	Eustis Mining Company.	Eustis, P. Q., Canada.	Pyrite, chalcopyrite, arsenopyrite, enargite.	Quartz and mica schist.	(*e*)
14.	Nichols Chemical Company.	Capelton, P. Q., Canada.	Pyrite, chalcopyrite, and arsenopyrite.	Quartz and mica schist.	Variable.
15.	Kohinoor Mill, Empire Zinc Company.	Joplin, Missouri.	Blende.	Flint.	34 (*c*)
16. and 17.	Granby Mining and Smelting Company.	Granby, Missouri.	Blende, calamine, smithsonite, galena, cerrusite, pyromorphite and other oxidation products.	Flint and quartz; some dolomite and calcite.	60 (*c*)
18.	Minnie and A. Y. Mill.	Leadville, Colorado.	Argentiferous galena, pyrite, blende.	Quartz.	95
19.	Moyer Mill.	Leadville, Colorado.	Argentiferous galena, pyrite, blende.	Quartz.	200
20.	Old Jordan and Galena Mining Company.	Bingham, Utah.	Class I.: pyrite. Class II.: pyrite, galena, and blende.	Quartz, and decomposed porphyry.	175
21.	Silver Age Mill.	Idaho Springs, Colorado.	Pyrite, galena, gray copper, chalcopyrite and blende; carrying gold and silver.	Quartz and feldspar.	40–50
22.	Central Lead Company.	Flat River, St. Francois County, Missouri.	Galena, a little pyrite.	Limestone.	175

Mill No.	Name.	Location.	Economic Minerals.	Gangue.	Capacity per 24 Hours. Tons.
23.	Flat River Lead Company.	Flat River, Missouri.	Galena, a little pyrite.	Dolomite.	100
24	Mine la Motte.	Mine la Motte, Missouri.	Galena, a little pyrite.	Limestone with silica.	100 (*f*)
25.	St. Joseph Lead Company.	Bonne Terre, Missouri.	Galena, a little pyrite.	Dolomite.	900
26.	Bullion Beck and Champion Mining Company.	Eureka, Utah.	Galena, cerrusite, malachite, azurite, silver (as sulphide, chloride, arsenite and arseniate), gold, arsenite and arseniate of copper.	Quartz, limestone.	200
27.	Revenue Tunnel Mines Company.	Mt. Sneffles, Ouray, Colorado.	Argentiferous galena, tetrahedrite, pyrite, blende, chalcopyrite.	Quartz and porphyry.	120
28.	Smuggler Mining Company.	Aspen, Colorado.	Native silver, argentiferous galena, pyrite, argentiferous barite, blende and smithsonite.	Blue limestone and quartz.	100 (*c*)
29.	Ute and Ulay Mill.	Lake City, Colorado.	Pyrite, blende, chalcopyrite, tetrahedrite, and argentiferous galena.	Quartz.	350
30.	Bunker Hill and Sullivan Mining and Concentrating Company.	Kellogg, Idaho.	Argentiferous galena, pyrite.	Quartzite and siderite.	530
31.	Gem Mill of the Milwaukee Mining Company.	Gem, Idaho.	Argentiferous galena and blende.	Quartz.	200
32.	Helena and Frisco Mining Company.	Gem, Idaho.	I. Cerrusite and pyromorphite. II. Argentiferous galena, pyrite, chalcopyrite and blende.	I. Quartz and iron oxide. II. Quartz.	600
33.	Last Chance Mill.	Wardner, Idaho.	Argentiferous galena.	Quartz.	75
34.	Morning Mining Company.	Mullan, Idaho.	Argentiferous galena, pyrite and blende.	Siderite with some quartz.	300
35.	Union Mill of the Standard Mining Company.	Wallace, Idaho.	Argentiferous galena, pyrite and blende.	Slate and quartz.	250–300
36.	Stem Winder Mill.	Kellogg, Idaho.	Argentiferous galena.	Quartz.	75
37.	Buffalo Hump Mining Company, Tiger and Poorman Branch.	Burke, Idaho.	Argentiferous galena and blende.	Quartz.	550
38.	Boston and Montana Consolidated Copper and Silver Mining Company.	Great Falls, Montana.	Chalcopyrite, pyrite, enargite, and bornite.	Quartz and decomposed feldspar.	(*g*)
39.	Butte and Boston Mining Company.	Butte, Montana.	Bornite, chalcopyrite, enargite, pyrite, blende with some silver minerals.	Quartz and decomposed feldspar.	500
40.	Colorado Smelting and Mining Company.	Butte, Montana.	Pyrite, blende, bornite, enargite, chalcopyrite, chalcocite, tetrahedrite and tennantite.	Quartz, decomposed granite, and barite.	(*h*)
41.	Parrot Silver and Copper Mining Company.	Butte, Montana.	Chalcocite, bornite, chalcopyrite, enargite and blende.	Quartz and decomposed feldspar.	300–350
42.	Anaconda Copper Mining Company.	Carroll, Montana.	Chalcocite, chalcopyrite, pyrite, enargite, blende.	Quartz and decomposed feldspar.	2500–2700

Mill No.	Name.	Location.	Economic Minerals.	Gangue.	Capacity per 24 Hours. Tons.
43.	Butte Reduction Works.	Butte, Montana.	Chalcocite, bornite, chalcopyrite, pyrite, blende.	Quartz and decomposed feldspar.	150
44.	Calumet and Hecla Mining Company.	Calumet, Michigan.	Native copper, native silver.	Rhyolite conglomerate with calcite, epidote and martite.	2640 (*i*)
45.	Franklin Mining Company.	Hancock, Michigan.	Native copper, native silver.	Soft amygdaloid rock.	450
46.	Osceola Consolidated Mining Company.	Houghton County, Michigan.	Native copper.	Amygdaloid, calcite, prehnite, magnetite.	1260
47.	Quincy Mining Company.	Hancock, Michigan.	Native copper.	Amygdaloid.	1700—1900
48.	Tamarack Mining Company.	Houghton County, Michigan.	Same as Mill 44.	Same as Mill 44.	1500
49.	New Smuggler Concentrator.	Aspen, Colorado.	Same as Mill 28.	Same as Mill 28.	125
50.	A Bartlett Mill.	Arizona.	Galena, chalcopyrite, blende.	Hornblende and quartz.	20 (*k*)
51.	(*l*)	Yreka, California.	Native gold.	Gravel.	(*m*)
52.	Kia Ora Gold Dredging Company.	Oroville, California.	Native gold.	Gravel.	(*n*)
53.	Hector Mining Company.	Telluride, Colorado.	Pyrite, chalcopyrite, tetrahedrite, galena and free gold.	White and blue quartz.	90
54.	Hornsilver Mining Company.	Frisco, Utah.	Native silver, argentite, cerargyrite, and cerrusite.	Quartz, calcite and siderite.	100
55.	Pandora Mill of Smuggler-Union Mining Company.	Telluride, Colorado.	Pyrite, chalcopyrite, galena, sphalerite, several arsenical silver minerals, occasionally native gold and silver.	Quartz, rhodocrosite, calcite and barite.	130 (*o*)
56.	Franklin Mining Company.	Placerville, California.	Native gold.	Conglomerate, with black sand.	60
57.	North Star Mining Company.	Grass Valley, California.	Free gold, auriferous pyrites.	Quartz.	64
58.	Maryland Mining Company.	Grass Valley, California.	Free gold, auriferous pyrites.	Quartz and slate.	80
59.	Empire Mill.	Grass Valley, California.	Native gold, auriferous pyrites.	Quartz and slate.	60
60.	W. Y. O. D. Mill	Grass Valley, California.	Native gold, auriferous pyrites.	Quartz and slate.	34
61.	Taylor Mine of Idlewild Gold Mining Company.	Greenwood, California.	Native gold, auriferous pyrites.	Quartz and slate.	115–128
62.	Grand Victory Mining Company.	Placerville, California.	Native gold, auriferous pyrites.	Quartz and trap-like rock.	100–150
63.	Bay State Mining Company.	Cosumnes River, California.	Native gold and auriferous pyrite.	Quartz in slate.	20
64.	Wildman Gold Mining Company.	Sutter Creek, California.	Native gold and auriferous pyrite.	Quartz, or quartz in slate.	93 (*p*)

Digitized by Google

Mill No.	Name.	Location.	Economic Minerals.	Gangue.	Capacity per 24 Hours. Tons.
65.	Madison Mill of the Utica Company.	Angel's Camp, Calaveras County, California.	Native gold and auriferous pyrite.	Soft slate with quartz.	135 (q)
66.	Homestake Mining Company.	Lead City, South Dakota.	Native gold and auriferous pyrite and arsenopyrite.	Quartz in mica schist.	400
67.	West Waverly Gold Mining Company, Limited.	Waverly, Nova Scotia.	Native gold and arsenopyrite, galena, pyrite, chalcopyrite, sphalerite.	Quartz.	50–65
68.	Montana Mining Company, Limited.	Marysville, Montana.	Native gold, tetrahedrite, pyrite, chalcopyrite, blende, galena, arsenical polybasite, argentite.	Quartz, slate, granite, calcite, manganese oxide.	105
69.	American Developing and Mining Company.	Gibbonsville, Idaho.	Auriferous pyrites, argentiferous chalcopyrite.	Slate, quartz, calcite, hematite.	97–112
70.	Newton Gold Mill.	Idaho Springs, Colorado.	Auriferous pyrites and native gold.	Quartz	.....
71.	Kennedy Mining and Milling Company.	Jackson, Amador County, California.	Native gold and auriferous pyrites.	Quartz and slate.	96 (r)
72.	Keystone Consolidated Mining Company.	Amador City, California.	Native gold and auriferous pyrite.	Quartz in slate, or quartz.	120
73.	Utica Mill of the Utica Company.	Angel's Camp, Calaveras County, California.	Native gold and auriferous pyrites.	Quartz in slate	210 (s)
74.	Stickles Mill of the Utica Company.	Angel's Camp, Calaveras County, California.	(t)	(t)	210
75.	Zeile Mining Company.	Jackson, Amador County, California.	Native gold and auriferous pyrites.	Quartz, with slate and talcose slate.	150
76.	Gentle Annie Mill.	Placerville, California.	Native gold and auriferous pyrites.	Quartz in slate.	15–25
77.	Hidden Treasure Mill.	Black Hawk, Gilpin County, Colorado.	Gold and silver-bearing minerals (pyrite, chalcopyrite, blende, tetrahedrite, arsenopyrite, galena.)	Quartz and feldspathic material, calcite, siderite.	85
78.	Gates Canvas Plant of Kennedy Mining and Milling Company.	Jackson, Amador County, California.	(u)	(u)	100
79.	Keystone Consolidated Mining Company.	Amador City, California.	(v)	(v)	119
80.	Utica-Stickles Canvas Plant.	Angel's Camp, Calaveras County, California.	(w)	(w)	410
81.	Stephen Lavagnino's Arrastras.	Angel's Camp, California.	(x)	(x)	18–20
82.	Montana Mining Company, Limited.	Marysville, Montana.	Like Mill 68.	Like Mill 68.	110
83.	Eureka Hill Mining Company.	Eureka, Tintic District, Utah.	Native silver, cerargyrite, galena, cerrusite, anglesite, malachite, azurite, chrysocolla, arsenite and arseniate of copper.	Quartz, calcite, siderite and rhodocrosite.	120
84.	Mammoth Mining Company.	Mammoth, Tintic District, Utah.	Native silver, cerargyrite, argentiferous barite, malachite, arsenite and arseniate of copper.	Quartz and calcite.	100
85.	Newton Jigging Mill.	Idaho Springs, Colorado.	Like Mill 70.	Like Mill 70.	

Mill No.	Name.	Location.	Economic Minerals.	Gangue.	Capacity per 24 Hours. Tons.
86.	Rocky Mountain Mill.	Black Hawk, Gilpin County, Colorado.	Gold and silver bearing pyrite, chalcopyrite, blende, and galena.	Quartz and disintegrated granite.	75
87.	North Star on Sultan Mill, Silverton Mining Company.	Silverton, Colorado.	Native gold, pyrite, chalcopyrite, galena, tetrahedrite, bornite, stibnite.	Quartz, calcite, rhodochrosite and barite.	125
88.	Victoria Mill.	Silverton, Colorado.	Galena, chalcopyrite, pyrite and tetrahedrite.	Quartz and "porphyry" (quartz andesite).	75
89.	Hartzell Concentrating Company.	Alburtis, Pennsylvania.	Magnetite.	Siliceous with no phosphorus or sulphur.	125 (*c*)
90.	New Jersey Iron Mining Company.	Port Oram, New Jersey.	Magnetite.	Quartz with some apatite.	
91.	Edison Magnetic Concentrating Plant, New Jersey and Pennsylvania Concentrating Company.	Edison, New Jersey.	Magnetite.	Feldspar with a little quartz and apatite.	4000 (*y*)
92.	Wetherill Magnetic Concentrating Plant, Sterling Iron and Zinc Company.	Franklin Furnace, New Jersey.	Franklinite, willemite, fowlerite, zincite, tephroite.	Quartz, calcite, garnet, mica, graphite.	200 (*s*)
93.	Wythe Lead and Zinc Mine Company.	Austinville, Virginia.	Limonite, smithsonite, willemite, cerrusite.	Dolomite and quartz.	80 (*c*)
94.	Leadville Gold and Silver Extraction Company.	Leadville, Colorado.	Native gold and cerrusite.	Gray porphyry with kaolin.	75

(*a*) Probably in 10 hours. (*b*) In 9 hours. (*c*) In 10 hours. (*d*) Similar to, but richer than in Mill 10. (*e*) Rock house, 60 tons in 10 hours; mill, 50 tons in 10 hours. (*f*) In 22 hours. (*g*) Capacity of each roll section, 300 tons in 24 hours; of steam stamp section, 250 tons in 24 hours. (*h*) 275 to 300 tons per 24 hours for the section treating ore from the company mine, and 125 to 150 for the section treating custom ores. (*i*) For each of the two mills. (*k*) In 11 hours. (*l*) A gold dredging plant. (*m*) Theoretical, 2,000 cubic yards in 24 hours; actual 1,600 or less. (*n*) Theoretical, 2,500 cubic yards per 24 hours; average, less than half this amount. (*o*) Since increased to 200. (*p*) Since enlarged to 145 tons. (*q*) Since changed to about 200 tons. (*r*) Since enlarged to about 135 tons. (*s*) Since changed to 300 tons. (*t*) Similar to Mill 73. (*u*) The mill treats the tailings of Mill 71. (*v*) The mill treats the tailings of Mill 72. (*w*) The mill treats the tailings of Mills 73 and 74. (*x*) Material is tailings from Mill 80. (*y*) In 20 hours. (*z*) A second mill erected by this company has a capacity of 1,400 tons in 20 hours.

CHAPTER I.

GENERAL PRINCIPLES.

§ 1. The preparation of ores for the smelter by mechanical means, whereby the valuable minerals are concentrated into smaller bulk and weight by the separation of some of the waste, or whereby two valuable minerals are separated from each other, is called Ore Dressing (Aufbereitung, Ger.; Préparation Mechanique, Fr.). Several other names are also in common use in the English language, namely, "concentration of ores," "washing of ores," and "reduction of ores." The latter phrase is not to be commended, as it really belongs to metallurgy, and its use in ore dressing produces a confusion of ideas.

The advantages gained by concentrating the valuable minerals into a smaller bulk are: first, that the cheaper mechanical method of rejecting the waste material is substituted for the more expensive chemical method of the smelting furnace; and secondly, the rejected waste material is not shipped, and this saves freight. In the case of non-metalliferous ores, such as graphite, emery and precious stones, the mechanical method is the only one available.

The advantage gained by separating two valuable minerals from each other lies in the fact that the mineral of less prominence is advanced from being of no value or even a positive detriment, to being a standard ore, salable to smelting works; while the mineral of more prominence has advanced in selling value from being a poorer grade of ore to being a better one, and commands a higher price in consequence.

To illustrate the advantage of smelting a concentrated ore over direct smelting, let us assume an ore containing 8% of lead; cost of mining, $2 per ton; concentrating, $0.60 per ton; smelting, $9 per ton for mine ore and $8 per ton for concentrates, (in some cases concentrates are smelted without charge, particularly where they contain much iron); freight charges, $1.50 per ton; 100 tons of ore concentrated into 10 tons; loss of metal 15% in concentrating, 10% in smelting mine ore and 8% in smelting concentrates. Then the account for treatment by direct smelting will stand:

Cr.	Mining 100 tons ore at $2.00 per ton	$200.00
	Freight on 100 tons ore at $1.50 per ton	150.00
	Smelting 100 tons ore at $9.00 per ton	900.00
		$1,250.00
Dr.	Return from 14,400 pounds lead at 3½ cents per pound	$504.00
	Balance of loss	$746.00

The account for treatment by concentrating and smelting will stand:

Cr.	Mining 100 tons ore at $2.00 per ton	$200.00
	Concentrating 100 tons ore at $0.60 per ton	60.00
	Freight on 10 tons concentrates at $1.50 per ton	15.00
	Smelting 10 tons concentrates at $8.00 per ton	80.00
		$355.00
Dr.	Return from 12,512 pounds lead at 3½ cents per pound	437.92
	Balance of profit	$82.92

If there was no freight to be paid in either case, there would still be a loss of $596 on 100 tons of ore by direct smelting, while the combined processes would yield a profit of $97.92.

§ 2. Ore dressing makes use of the physical properties of minerals and rocks; and the difference in behavior between the valuable and waste minerals affords methods for the separation of the former from the latter. Physical properties of interest in ore dressing are:

Hardness.
Tenacity and brittleness.
Structure and fracture.
Aggregation.
Color and luster.
Specific gravity and settling power.
Adhesion.
Greasiness.
Magnetism.
Change in condition by heat from non-magnetic to magnetic.
Change in mechanical condition by heat from dense to porous.
Decrepitation by heat.

Some facts about these physical characters are given in the following pages. The properties that have most effect upon crushing will be taken up first.

HARDNESS.—Minerals differ greatly in their hardness, ranging from the hardness of the diamond to the softness of talc, their ability to scratch one another being considered the measure of hardness. The table of hardness adopted by Dana in his "Mineralogy" is as follows:

10 Diamond	8 Topaz	6 Feldspar	4 Fluorite	2 Gypsum
9 Sapphire	7 Quartz	5 Apatite	3 Calcite	1 Talc

Each mineral in the list can scratch all those below it. Hardness affects the wear of crushing machines—the harder the mineral the greater the wear. It does not necessarily affect the tendency of the mineral to produce fine slimes in crushing.

TENACITY AND BRITTLENESS.—Some minerals, such as horn silver, native copper, mica, talc and gypsum, are very tough, though they may at the same time be soft, and this makes them difficult to break. Some forms of hornblende and feldspar exhibit extraordinary toughness, although they are not very hard; other minerals are brittle and break up with comparative ease, as, for example, some varieties of quartz. A hard, brittle mineral will slime much more than one which is soft and tough.

STRUCTURE AND FRACTURE.—The structure of a mineral tends to modify the shape of the particles resulting from crushing. Cleavable minerals may break into cubical blocks, as galena; into elongated fragments, as galena, feldspar, calcite and sphalerite; into needle-like or thread-like shapes, as asbestos; or into flat scales, as galena, mica, graphite and talc. Granular minerals will drop naturally into separate rounded grains when broken up, as magnetite, garnet and some varieties of galena. Minerals with massive structure, free from any special tendency to break in one more than in another direction, may have earthy fracture, as hematite; or conchoidal (oyster shell-like), as pyrite crystal, quartz crystal and obsidian. The shapes of these grains have an important bearing upon their power to settle in water or in air.

MINERAL AGGREGATION.—The valuable minerals may occur in pure masses, as in the banded vein structure and in pockets or vugs. They may also be in large crystals mixed with the waste minerals. Both these conditions are favorable for complete separation. On the other hand they may occur much intermingled with the waste minerals: either in granular structure, that is to say, rounded grains or small, compact crystals; or of an acicular structure, in long needle-like crystals, the valuable and waste minerals penetrating each other in all directions, to the eye a hopeless tangle; or, finally, of laminated structure, in thin layers alternately of good and worthless mineral. All of the latter structures add difficulty to the problem of ore dressing.

The physical properties that have most to do with separation will be considered next.

COLOR AND LUSTER.—These qualities are of the greatest value in hand picking. Slight differences in color or in luster—for instance, the brass yellow of chalcopyrite, the pale yellow of pyrite, the white of arsenopyrite, the vitreous luster of quartz, the resinous of sphalerite, the adamantine of diamond and cerussite, the dull of chalk and the pearly of talc—furnish valuable aids in hand picking.

SPECIFIC GRAVITY.—The difference in specific gravity of minerals affords one of the surest means of separating them from each other. Specific gravity may be defined as the ratio of the weights of equal volumes of substances. For convenience, distilled water at 60° F. is usually taken as the standard of comparison. One cubic centimeter of quartz weighs 2.653 grams, while one cubic centimeter of water weighs 1 gram. One volume of quartz, therefore, weighs 2.653 times as much as one volume of water at 60° F. In like manner one volume of copper is found to be 8.8 times as heavy as one volume of water. The specific gravity of quartz is, therefore, said to be 2.653, while that of copper is 8.8.

We can go still further and compare the copper with the quartz, with the above figures as a basis, and divide 8.8 by 2.653, which gives 3.317, from which we conclude that one volume of copper is 3.317 times as heavy as one volume of quartz.

Liquids also vary in specific gravity. Ocean water is denser than fresh water; Great Salt Lake water is denser than ocean water. Unless some adverse condition is introduced, the denser the water the better will it serve for the separation of minerals.

A table of specific gravities of minerals taken from Dana's "System of Mineralogy," 1892, is given in the appendix, comprising minerals which are more or less apt to be present in the ore deposits of this country. A few artificial products are also included for convenience. Against many of the minerals two figures are given—thus, the specific gravity of quartz is said to be from 2.653 to 2.660, which shows that its specific gravity is not absolutely constant, but varies from one figure to the other.

As already stated, the differences in specific gravity of the minerals furnish

the most valuable means for their separation, and this property may be employed in two different ways, namely, as affecting settling power, or as affecting momentum.

Settling Power of the Particles in Air, Water, or Other Media.—In general it may be said that of two particles of the same size and shape, the heavier will settle faster than the lighter, and of two particles of different specific gravities and the same settling velocity, that with the higher specific gravity will be of smaller diameter than the other. The ratio between these two diameters will have an approximately constant value under similar conditions, and these are called settling ratios.

Momentum.—When a particle is given a high velocity in a horizontal direction, the path it follows is called its trajectory. Of two particles of the same size and shape, the heavier will have the longer trajectory, and of two particles with different gravities but the same trajectory, that with the higher gravity will be of smaller diameter than the other.

ADHESION has its place in plate amalgamation. When clean particles of gold are coated with mercury and brought into contact with an amalgamated copper plate, the gold adheres to the plate, while the quartz particles with which the gold was associated do not adhere. The gold is thereby separated from the quartz. If the mercury is clean the capillarity is concave or positive, like that of water, and the gold adheres strongly; if the mercury is sick or foul, the capillarity is convex or negative, and the gold is lost. It is purely a matter of capillarity and, therefore, belongs among the physical properties of the minerals.

Diamonds adhere to a greasy surface, while quartz does not, effecting thereby an economical separation.

GREASINESS.—This is the term used to express the tendency of minerals to float on the surface of water as if they were greasy. It is caused by the aversion of the surface of the particle to become wetted. The particle may carry an air bubble down with it, which later floats it to the surface, or its dry surface may prevent its sinking at all, the particle floating at the base of a little dimple or depression on the surface of the water. This causes much trouble in ore dressing. All minerals exhibit the tendency, but with some species it is very marked; for instance, in native copper, native gold, cassiterite, sphalerite, graphite, and some of the silver minerals. This property may be regarded rather as a difficulty to overcome than as a help, for the reason that it cannot be depended upon—at one moment a given grain will float, at another it will sink. An approach toward a useful effect may be gained by forcing large quantities of air in fine bubbles to the bottom of the sand in a water tank. The floating scum, when caught by gently dipping transverse gates, often gives a higher assay than any product in a mill.

MAGNETISM.—The attraction to the magnet is quite strong in some minerals and metals, notably magnetite, some forms of pyrrhotite, cast iron, wrought iron, steel, nickel and cobalt. Other minerals, such as franklinite, chromite, serpentine, black blende, garnet, etc., have very weak magnetism. Still others, such as quartz, calcite, gypsum, feldspar, etc., exhibit no attraction at all. By using properly constructed magnets this property may be made of great value, not only separating the magnetic from the non-magnetic, but those that are more magnetic from those that are less so.

CHANGE OF MAGNETISM BY HEAT.—Certain minerals, especially those of iron, when heated, lose oxygen, carbonic acid or sulphur, and are changed from being non-magnetic or only slightly magnetic to strongly magnetic. The magnet may then be employed for separating them from non-magnetic minerals.

CHANGE OF POROSITY BY HEAT.—Certain minerals, for example, pyrite, if heated gradually sufficiently high and for a sufficient time, part with some

volatile ingredient, for example sulphur, and by becoming porous they change to a lower specific gravity, and can then be separated from minerals whose specific gravity was equal to theirs before the heating took place.

DECREPITATION.—Some minerals, when laid upon a hot plate, decrepitate or fly to pieces through the unequal expansion which overcomes the cohesion of the molecules. Calcite, fluorite and barite are examples of this. A mineral which decrepitates may be separated from one which does not, by decrepitating and sifting; the latter mineral will be found on the sieve, while that which was finely decrepitated will have gone through.

THE USE OF SUPPLEMENTARY PRINCIPLES.—A process usually consists of two or more successive steps, in which the later is supplementary to the earlier. Thus, sorting in classifiers is followed by sizing on slime tables; and sizing by screens is followed by sorting on jigs. In each case the first step prepares the ore for the second, and the second supplements and completes the work which the first step was incapable of performing alone. Neither step is complete without the other.

The use of *graded crushing* and *graded separation* to diminish the amount of slimes produced is quite frequently resorted to with brittle minerals.

§ 3. Ore dressing is divided into two parts, severing and separating:

1. Severing or Detaching.—The valuable minerals as they occur in the rock, are attached to waste minerals, and to sever the one from the other, the various steps of breaking, crushing and comminuting are used.

2. Separating.—After the crushing has severed the valuable minerals from the waste, the two are still mixed together; and the true separation, which puts the good ore into the store bin and sends the waste to the dump, must then take place.

PART I.

BREAKING, CRUSHING, COMMINUTING.

PART I.

BREAKING, CRUSHING, COMMINUTING.

The valuable minerals occur associated with and attached to waste rock, and before any separation can take place the one mineral must be severed, detached or unlocked from the other, and this is done by one or more of the following means: blasting in the mine; calcining by fire; steam hammers; drop hammers; hand hammers; rock breakers; crushing rolls; steam stamps; gravity stamps; and the various fine grinders. The several operations and machines will be taken up somewhat in the order of sizes of rock which they treat, those which treat larger lumps being, as a rule, considered earlier.

Crushing machines may be divided into three great groups, namely: those which break by pressure; those which break by a blow; and those which break by abrading or grinding. These principles are discussed in Chapter VII.

CHAPTER II.

PRELIMINARY CRUSHING.

Preliminary crushing is done by: blasting in the mine; calcining for friability, with or without quenching; by sledging, spalling and cobbing hammers; steam hammers and drop hammers; rock breakers; special forms of rolls; log washers and wash trommels.

§ 4. Blasting in the Mine.—Though strictly speaking this operation lies outside the realm of ore dressing, it may be made to help or to hinder the concentration which follows, according to the manner in which it is conducted. For example, high-power explosives break the rock much smaller than those of low power, and lessen the work of the hammer and rock breaker very materially. On the other hand, if the valuable minerals are brittle, a high explosive may cause too large an amount of fines, leading to subsequent loss in the mill. The occurrence of the ore in the vein is often in a pay streak of limited width, and when this happens the bore holes may be put in barren adjacent rock. With this precaution, the pulverizing effect of the high-power explosives may extend to barren rock only, and the advantage of breaking small be obtained from its use, without the disadvantage of pulverizing the ore. In deposits where the above precaution cannot be taken, and, as a result, an undue quantity of fines is being formed, a lower power explosive may be resorted to as a cure for the evil.

§ 5. Calcining for Friability, with or without Quenching by Water.—When an ore is heated by fire the minerals are cracked and fissured in all directions by the unequal expansion, rendering them very friable, and if they are dropped into water when hot the effect is increased. This operation increases the capacity of the crushing machines which follow, but at the same time it increases the tendency to slime, and also the tendency of sulphides and other minerals to decompose in such a way as to affect the subsequent treatment, either favorably or unfavorably. An instance is recorded in which calcined quartz yielded 15% more slimes than raw quartz, when crushed by stamps.[29]

At Ammeberg, Sweden, in the works of the Vieille Montagne Co., coarse ore is "softened" by heating in kilns, in order to lessen wear on the crushing machinery. Quenching with water was tried, but the blende decrepitated to such an extent as to cause serious loss in slimes, and it was, therefore, given up.[55] At Allevard, France, spathic iron ore is "softened" by calcining, so that schist and quartz can be separated much more easily than without calcining.[74] At Altenberg, Saxony, tin ore is sometimes made friable by heap roasting, with fagots, chips and roots for fuel.[3] At some of the corundum mines in North Carolina, the large blocks of hornblende, feldspar and gneiss are prepared for the rock breakers by building a fire on them, and then suddenly throwing on water.[57]

Breaking by Hammers, with or without Hand Picking.

§ 6. Hammers are used for breaking the lumps that are too large for the machine breakers; or to aid hand picking, by which clean ore is set aside for the smelter, and clean waste for the dump. Hammers of several kinds are used: sledges, spalling hammers, cobbing hammers, steam hammers, and drop hammers.

HAND SLEDGES.—These are two-hand hammers and are used in all mining regions for sledging, ragging or breaking the larger rocks to bring them to a size which will enter the jaws of the machine breaker. Where the valuable mineral cleaves from the waste rock in compact, rich fragments of sufficient size, hand picking accompanies this work.

Two chief types of hammers appear to find favor: those with beveled edges are shown in Fig. 1; those with sharp edges are shown in Fig. 2. One hammer

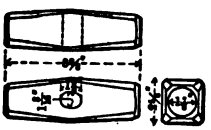

FIG. 1.

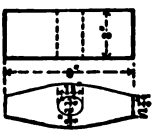

FIG. 2.

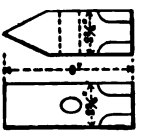

FIG. 3.

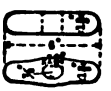

FIG. 4.

with a sharp pean running at right angles to the handle is shown in Fig. 3. The advantage of two faces on a hammer is that it can be used twice as long before it has to be re-faced. The claim for the sharp-edged face is that a skillful operator can cleave the rock with the edges and thus effect a more perfect separation of the valuable mineral from the waste. To maintain the edges, these hammers have to be faced up more often than those with beveled edges. The sharp pean, set at right angles to the handle, such as is used in Mill 28, (see Fig. 3), has the advantage that cleavage strokes of great accuracy can be made with it. Some managers claim that the skill of the workman is all important, and that the shape of the hammer, whether square faced or beveled, is a matter of indifference. Others, maintaining the virtues of the square face,

TABLE 2.—SLEDGES USED IN THE MILLS.

Mill No.	Locality.	Face.	Weight. Pounds.	Length of handle. Inches.	Shown in Fig.
13	Eustis, P. Q.	Sharp edges.	12 to 16	28	2
28	Aspen, Colo.	Sharp edges and sharp pean.	12	32	3
30	Cœur d'Alêne, Idaho	Beveled edges.	12	34	1
40	Butte, Mont.	Beveled edges.	10 for soft rock. 16 " hard "	36	1
48	Lake Superior, Mich.	Sharp edges.	12½	34	2
	Silverton, Colo.*	Beveled edges.	10	30	1

* 12,000 feet above sea level

dissent from the latter proposition, while they agree to the former. Table 2 gives some sizes and forms of sledges, and the localities in which they are used.

It is noteworthy that the lightest sledge recorded (10 pounds), is used in the light air of a very high altitude—12,000 feet above sea level. It will be noticed that Mill 40 uses a lighter hammer for soft rock and a heavier one for hard rock.

In regard to the length of handle, the mill practice as found, ranges from 28 to 36 inches gross length. As a general principle, the longer the handle the greater the speed of the blow, but beyond 36 inches the heavy sledges become unwieldy.

In most of the mills where sledges are used, they serve only to facilitate hand picking (see Chapter XIII.), the principal part of the breaking being done by machine; but in Mills 2 and 14 all of the breaking is done by hand. In Mill 77 such ore as needs to be broken before being fed to the stamps, is broken by sledges. The machine breaker, in this case, however, would be used if there

were sufficient height.* In Mill 25, ore is broken by sledges small enough to feed to the 9×15-inch Blake breakers.

§ 7. SPALLING HAMMERS.—These are two-hand hammers, but are much lighter than sledges; and the operation of spalling is the breaking of moderate sized lumps down to a uniform size, with swift, light blows; for example, bringing pyrite down to a suitable size for kiln roasting, with the minimum production of fines. The spalling hammers used at Mill 13 (Fig. 4) are of two sizes, which weigh 2 and 3 pounds respectively, each of which has a 27-inch handle. The larger hammer is of 1⅜-inch, the smaller of 1¼-inch square steel, expanded at the eye for strength. Each is 6 inches long and the faces are rounded almost to a hemisphere, and with them 5-inch cubes are broken to 2 inches in size. What appears to be the best form of handle for a spalling hammer is much smaller in the middle than at the ends. It is 30 to 36 inches long, about 1½ inches thick at the hand end, about 1 inch thick at the hammer end, but shaved down to ¾ inch for a distance of 10 inches, beginning 6 inches from the hammer. Such a handle has withstood five months of constant use by a careful man, while the average life of an ordinary handle is scarcely four days.[26] In addition to increasing the life of the handle, the flexibility saves the shock to the workman's hands.

The capacity of a man for spalling is given by the authorities as follows:

	Pounds per hour.	Material.	Size of product.
Linkenbach.	1,450	Ordinary sulphide ore.	6 inches.
Peters.....	1,400	" " "	2½ "
Rittinger...	250 to 625 (2½ to 6¼ cubic feet).	Average ore.	2½ "

§ 8. COBBING HAMMERS.—These are small one-hand hammers, and the object of cobbing is to cleave and to hand pick the good ore from the refuse. The cobber generally sits down to his work. A good form of cobbing hammer has at one end a sharp wedge-shaped pean placed either parallel to or at right angles with the handle; and at the other end, a flat face with sharp edges; and weighs from 2 to 4 pounds. The flat face is used for the harder strokes, the sharp pean for the finer work. The sharp-edged pean at right angles to the handle has the advantage that one can strike a truer blow, and cleave the good ore from the refuse more perfectly. The pean parallel to the handle has the advantage that the fragments fly to right and left instead of toward and away from the operator. No cobbing hammers were found in use in the mills visited by the author. Various sizes of hammers, quoted from different authors, are indicated in Table 3.

TABLE 3.—HAMMERS QUOTED FROM AUTHORS.

	Sledging.		Spalling.		Cobbing.	
	Weight. Pounds.	Handle length. Inches.	Weight. Pounds.	Handle length. Inches.	Weight. Pounds.	Handle length. Inches.
Foster.....	10 to 12	.....	4 or 5	.....	.....	.....
Gastschmann.....	8 to 12†	.....	3 to 4. 5 to 8 for toughest rock	.....	1½ to 2 for soft rock. 3 to 4 for hard rock.	10 to 12
Baton de la Goupilliere.	.....	.....	3½ to 4½	About 43	2.2 to 2.6	.....
Linkenbach.....	8	36	.....	.....	About 3.5	About 12
Louis.....	.....	.....	3	30	.....	.....
Peters.....	.....	.....	2¾	.....	.....	.....
Rittinger.....	8	.....	3 to 4	30 to 36	2 to 4	.....

† Sometimes as light as 6 pounds.

*Since the above was written it has been found possible to introduce machine breakers, and they are now used.

§ 9. STEAM HAMMERS of large size were formerly used in the Lake Superior region, at Mine 44. These hammers weighed a ton or more and were lifted and forced downward by steam cylinder and piston, in the same manner as large forging hammers. For convenience, the anvil was placed on a level with the floor to make easy the placing of rock masses and the removal of the fragments. The use of higher power explosives in the mine, and of larger rock breakers in the rock houses has done away with this machine.

A small steam hammer, made by William Sellers & Co., is used in the rock house of Mine 47 for cleaning mass copper from adhering rock. The cylinder is 10 inches in diameter, with stroke 18 inches long. The steam pressure is 60 pounds per square inch; the number of strokes is 144 per minute, more or less, and it consumes about eight horse power. The weight of the striking part is 400 pounds. The anvil weighs about 3,000 pounds. The shoe is made of gray cast iron, which lasts 90 days and is more durable than chilled cast iron. Three men working with this hammer, can dress one ton of mass copper per hour. It yields:

Clean copper (about 75% copper) to smelter.
Rich copper rock (7 to 10% copper) to the stamps.

DROP HAMMERS, operated on the principle of a pile driver, are used to a considerable extent in the Lake Superior district for breaking large lumps and cleaning mass copper preparatory to smelting. They are used in the rock houses of Mines 46, 47 and 48. The hammer is lifted between guides by a rope, an overhead sheave and a winding drum. When at the top, the drum is released and the hammer falls, unwinding the rope as it goes down. The hammer has a shoe in the form of a truncated cone. The die is supported upon heavy foundations to withstand the shock, and is placed on a level with the floor for convenience in bringing masses of rock and removing the resulting fragments. The shoe and die are replaceable when worn out. Details of the drop hammers in the mills are given in Table 4.

TABLE 4.—DROP HAMMERS.

Mill No.	Entire Hammer.			Shoe Alone.				Drop. Feet.
	Length. Feet.	Diameter. Inches.	Weight. Pounds.	Height. Inches.	Top Diam. Inches.	Bottom Diam Inches.	Weight (about). Pounds.	
46	7	12	2,000	12	12	8	250	6
47	.....	.....	3,000	.....	.....	.....	.....	6 to 20
48	7	12	2,000	12	12	8	250	6

§ 10. ADVANTAGES OF HAND BREAKING.—Breaking by hand is more expensive than by machines if any considerable quantity of work is being done; but if the enterprise is temporary or on a small scale, or if the valuable mineral is of high value, or cleaves in compact, clean lumps, hand work may be the cheaper.

Hand breaking makes much less fines than breaking by machine; and with certain classes of ores, for example preparing pyrite for making sulphuric acid, this has at times been considered a sufficient gain to offset the advantage of the cheaper machine work. Hand breaking has the important additional advantage of intelligence—it severs the different minerals from each other in a manner most favorable for making clean products by hand picking. This fact is utilized in Mills 13, 17, 46, 47 and 48, although they use machines for the principal part of their breaking.

The relative proportion of fines was shown by a test of 2,220 tons of average copper ore, half of which was broken by hand, and half by a breaker set at 64

mm. opening, everything smaller than 6 mm. having been first screened out.[26] The proportions of coarse to fine made by the operations were as follows:

	By hand.	By breaker.
Through 64 mm. on 6 mm.	90.69 per cent.	82.68 per cent.
Through 6 mm.	9.31 " "	17.32 " "

showing that the breaker produced nearly twice as much fines as the hammer.

The advantage of the intelligence that is coupled with hand breaking, over the mere mechanical breaking done by machines, is shown by a test where 49% of clean products was picked out in connection with the former, while only 17% was picked out in connection with the latter.[60]

The question as to whether hand or machine breaking is preferable in any given case must be decided, of course, by the net profit.

ROCK BREAKERS.

§ 11. These machines, as a rule, constitute the first step in systematic crushing for mill work. They all act upon the principle of approaching and receding jaws which crush the rock. They are fed with ore of mixed sizes up to the maximum diameter that the mouth or receiving opening can take, and they break it to a uniform maximum size, which latter is determined by the distance apart of the jaws at the throat or discharge opening. Since the large size and irregularity of the feed rock generally precludes automatic feeding, they are fed by hand or by shovel, in many cases by chute sloping from the bottom of a bin, the attendant easily pulling forward the ore in the chute by a rake or hoe.

There are two chief classes of machines:

I. The jaw breakers, which are intermittent machines.

II. The spindle or gyrating breakers, which are continuous machines.

I.—Jaw Breakers.

The jaw breakers are divided into three types according to the movement of the jaw:

(*a*) Those which are pivoted above so as to give the greatest movement on the smallest lump.

(*b*) Those which have an equal movement on all sizes.

(*c*) Those which are pivoted below and have the greatest movement on the largest lump.

(*a*) JAW BREAKERS WITH GREATEST MOVEMENT ON SMALLEST LUMP.

§ 12. The Blake Breaker, as finally adopted by its inventor, Mr. Eli Whitney Blake, was the first successful jaw breaker, and it has held its place as the standard machine ever since. The original form, patented June 15, 1858, gave the greatest movement at the mouth. "The inventor quickly saw that for rapid crushing of rock the conditions of movement of jaw should be reversed, —that the lower part of the crushing face should have the greatest movement."[60] The standard form which is in the catalogues of all the manufacturers, has the greatest movement on the smallest lump.

The Blake breaker (see Figs. 5, 6 and 7) is made up of the parts described as follows: The frame 1 (Fig. 7) is made of strong cast iron or cast steel, strongly ribbed, and amply thick to resist great stresses and shocks. Below and forming parts of the same casting, are the four legs 0 (Fig. 5) with feet having bolt holes for holding down the machine. Upon the top of the frame are the boxes for the swing jaw shaft 35, and the eccentric shaft 36. At the rear is a hori-

zontal web 43, for the support of the toggle wedge 10, and toggle block 8. The fixed jaw 4, is bedded with ¼ inch of zinc against the end of the frame 1. The fixed jaw plate 5 is held in its place by the two cheek plates 13, which are wedge shaped and are driven to a bearing between the fixed jaw plate and recesses in

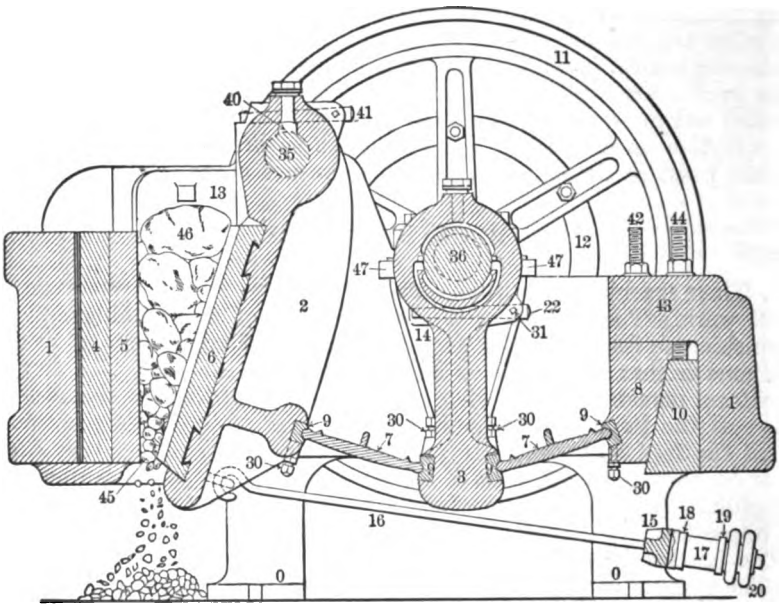

FIG. 5.—SECTION OF BLAKE BREAKER, MADE BY THE FARREL FOUNDRY AND MACHINE CO.

KEY TO FIGS. 5, 6 AND 7.

0. Legs.
1. Frame.
2. Swing jaw.
3. Pitman.
4. Fixed jaw.
5. " " plate.
6. Swing " "
7. Toggle.
8. " block.
9. " bearing.
10. Wedge.
11. Fly-wheel.
12. Pulley.
13. Cheek plate.
14. Pitman half-box.
15. Spring bar.
16. " rod.
17. Rubber spring.
18. Washer.
19. "
20. Thumb nut.
21. Hopper.
22. Key.
23. Bolt.
24. "
25. "
26. Eye bolt.
27. Lock wrench.
28. " "
29. Bolt.
30. "
31. Set screw, for key.
32. Bolt.
33. Set screw.
34. Nut.
35. Swing jaw shaft.
36. Eccentric shaft.
37. Cap for swing jaw shaft.
38. " " eccentric.
39. Key for fly-wheel.
40. Gib.
41. Key.
42. Supporting bolt.
43. Web.
44. Adjusting bolt.
45. Throat.
46. Mouth.
47. Oil tubes.
48. Recesses for cheek plates.

the frame 48. (See Fig. 7.) Chilled cast iron with longitudinal 90° corrugations appears to be the most usual material and form for the jaw plates.

The swing jaw 2, is of steel and is held to its shaft 35, by the gib 40, and key bolt 41. It is furnished with a jaw plate 6, which is held by dovetails to the jaw. At the rear of the jaw is a steel toggle bearing 9, and near the bottom is an eye for the spring rod 16.

The pitman 3, is of steel and is suspended from the eccentric shaft 36, with bearing surfaces of babbitt metal above and below which can be taken up, as they wear, by the key 22. It is made very strong to resist great tensile stress. It has two steel toggle bearings 9. The toggle block 8, supported by the bolt 42, is also furnished with a steel toggle bearing 9. All four toggle bearings are held in place by set screws, 30. The wedge 10 is elevated or depressed by the

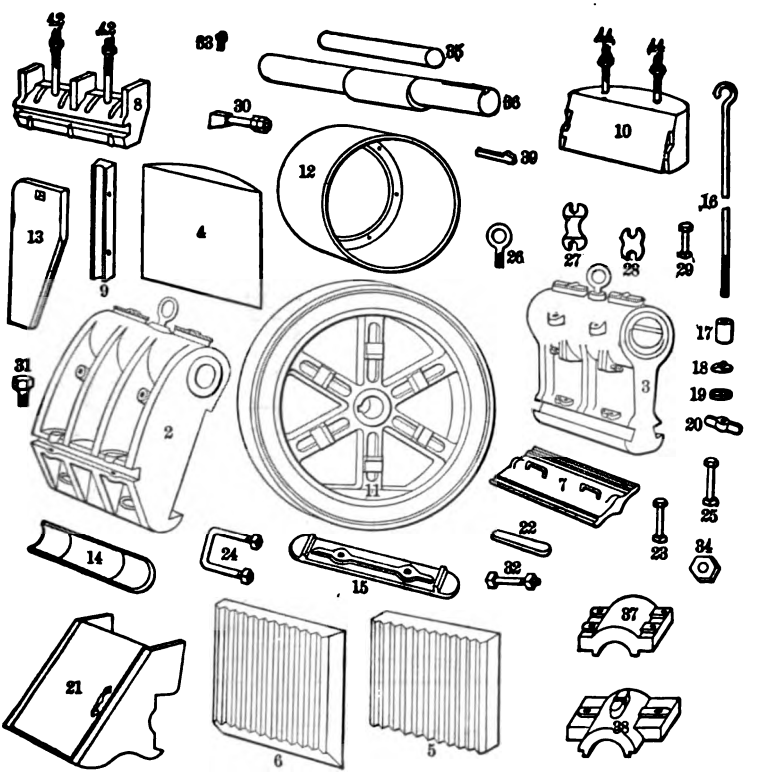

FIG. 6.—DETAILS OF THE BLAKE BREAKER, MADE BY THE FARREL FOUNDRY AND MACHINE CO.

bolt 44. The two toggles 7, are supported by the toggle block 8, the pitman 3, and swing jaw 2, respectively.

The two spring rods 16, are furnished with rubber springs 17, which are held in compression against the spring bar 15. The four toggle bearings 9, are furnished with oil tubes 47. These and all the oil holes in the boxes are kept plugged to avoid grit. The half hopper 21 (see Fig. 6), covers the boxes, key and oil holes of the swing jaw shaft and shields the pitman and toggles. The heavy fly-wheel 11 is attached to the eccentric shaft 36 by a key 39, and the pulley 12, is bolted to the fly-wheel.

The receiving space 46, is called the mouth and is measured by the width of the jaw plates, that is to say, the distance between the cheek plates; and by the gape or opening, that is to say, the distance between the tops of the jaw plates. The discharging space 45 is called the throat and is measured by the width of the jaw plates and the opening between the jaws when they are farthest apart.

§ 13. *Operation and Adjustment.*—The operation of the machine is as follows: As the eccentric lifts the pitman, it straightens out the toggles, lengthening the distance between their outer ends. This forces the swing jaw to approach the fixed jaw, crushing the rock. When the eccentric lowers the pitman, it unlines the toggles and the swing jaw is free to recede from the fixed jaw. It is forced to do so by the rubber spring and it then allows the crushed rock to slide down to a new bearing preparatory for the next nip.

The power is brought by a belt to the pulley and is consumed by the crushing of rock, for a period slightly less than one-half a revolution, because it requires an instant of time to settle the rock to a bearing against the jaws. During the

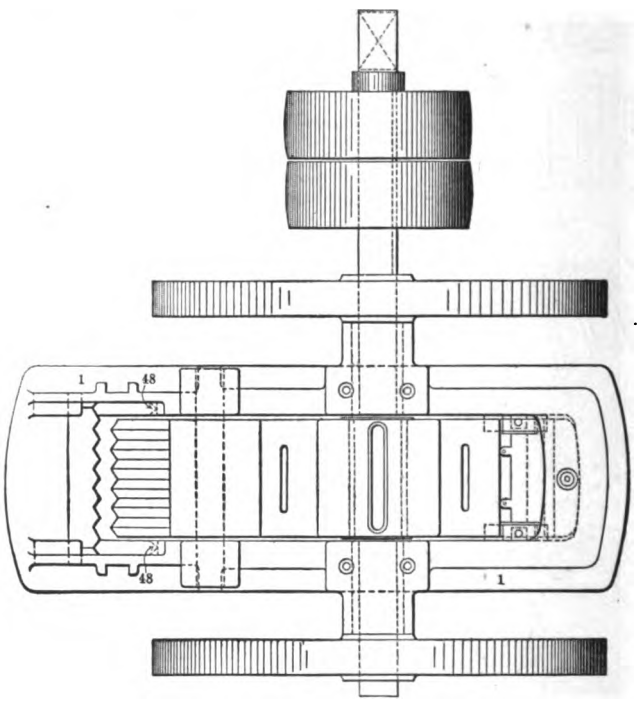

FIG. 7.—PLAN OF BLAKE BREAKER, MADE BY FRASER & CHALMERS.

other one-half revolution, the power is being accumulated in the fly-wheel. Hence its action is intermittent.

When, by the wear of the jaw plates, the space at the throat becomes too great and the crushed rock too coarse, the jaws can be brought nearer to each other by raising the wedge by means of its nut. When the wear is too great for this adjustment to be effective, longer toggles can be used, care being taken to choose them of lengths to keep the pitman vertical. Later, the jaw plates may be inverted and the whole thing repeated, and finally, new jaw plates must be provided.

§ 14. *Details of Sizes.*—Table 5 shows the details of the different sizes of Blake breaker made by the Farrel Foundry and Machine Co., some of which are illustrated in Fig. 8.

The capacities stated in the list are approximate, and are based on a rock or ore that is hard and friable, diligently fed, and that will clear itself quickly at outlet, and they vary somewhat according to the nature of material to be broken.

Hard rock that breaks with a snap breaks faster than sandstone. The capacity varies with the number of revolutions per minute, so that, where the breakers are run at 300 revolutions, the capacity will be $\frac{1}{11}$ more than that given in Table 5. The horse power required to drive breakers varies somewhat, according to the character of material and size to which it is broken, but that given in the table is a fair average, and is equivalent to:

11 to 12 tons per horse power per 24 hours, crushed to 1½ inches.
15½ to 19 tons per horse power per 24 hours, crushed to 2 inches.
18 to 22 tons per horse power per 24 hours, crushed to 2½ inches.

TABLE 5.—SIZES OF BLAKE BREAKERS, MADE BY THE FARREL FOUNDRY AND MACHINE CO. (From the Catalogue.)

Abbreviations.—H. P.=horse power; In.=inches; Ft.=feet; Rev.=revolutions.

No.	Mouth size.	Approximate capacity in tons per day of 24 hours to sizes stated.			Extreme dimensions. Length.		Breadth.		Height.		Size of pulley.	Rev. per minute.	H. P. required.	Total Weight.	Weight of heaviest piece.
	In.	Tons. In.	Tons. In.	Tons. In.	Ft.	In.	Ft.	In.	Ft.	In.	In.			Pounds.	Pounds.
1	For Laboratory Use.				1	6	1	0	1	2	5x1	275	¼	100	40
2	6x2	24 to 2	10 to 1	3½ to ½	3	2	2	6	2	3	11x4	275	2	1,200	560
3	10x4	84 " 2	60 " 1½	36 " 1	4	9	3	8	3	11	20x6½	275	5	4,660	2,700
4	10x7	120 " 2	96 " 1½	60 " 1	6	0	4	2	4	5	30x7½	275	8	8,200	4,450
5	20x6	300 " 2	200 " 1½	130 " 1	6	1	5	3	4	6	30x7½	275	15	11,200	6,500
6	20x4	120 " 1	84 " ¾	60 " ½	5	4	5	8	4	3	24x9	275	10	13,000	7,500
6½	15x9	240 " 2½	190 " 2	130 " 1½	7	0	5	3	5	3	30x9	275	12	15,000	7,500
7	16x10	290 " 2½	240 " 2	180 " 1½	7	2	5	6	5	3	30x9	275	15	16,200	9,300
8	20x10	420 " 3	360 " 2½	300 " 2	7	8	5	10	5	1	30x12	275	20	18,300	10,300
9*	24x15	600 " 3	480 " 2½	420 " 2	7	10	7	2	5	9	30x12	275	25	26,000	12,000
10*	30x13	720 " 3	660 " 2½	540 " 2	8	6	8	2	6	4	36x12	275	30	37,600	22,000
11*	30x15	960 " 4½	840 " 3½	.....	8	6	8	2	6	4	36x12	275	30	37,600	22,000
12*	36x30	1,920 " 8	1,440 " 6	1,200 " 5	9	10	8	8	6	10	36x12	275	40	50,000	26,700
13*	36x34	2,400 " 10	1,920 " 8	.....	9	10	8	8	6	10	36x12	275	40	50,000	26,700

*These sizes have two driving pulleys.

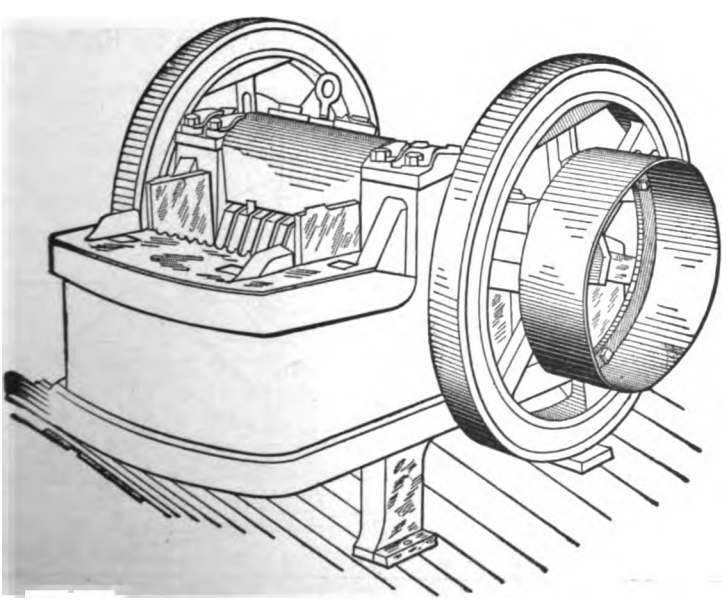

FIG. 8.—STYLE OF BLAKE NUMBERS 6½ TO 13 INCLUSIVE, TABLE 5.

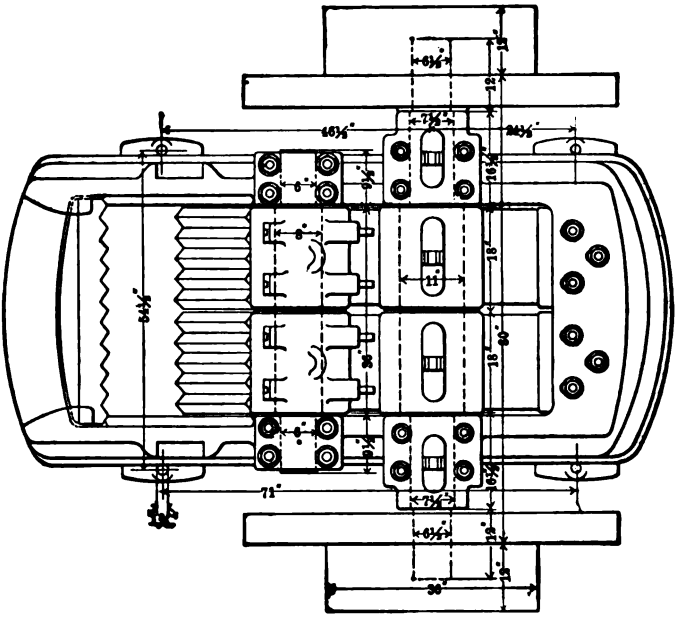

FIG. 9.—PLAN OF NO. 13 BREAKER, IN TABLE 5.

The large breaker, No. 13, with jaw opening 36×24 inches (see Figs. 9 and 10), is used by Mill 44 to crush the large lumps down to 12 inches, work which was formerly done by a steam hammer.

§ 15. *Instructions for Mounting a Blake Breaker,* taken from a number of trade catalogues, are as follows:

1. Place the frame 1 (Fig. 5) level on the floor or on the timbers, lengthwise.

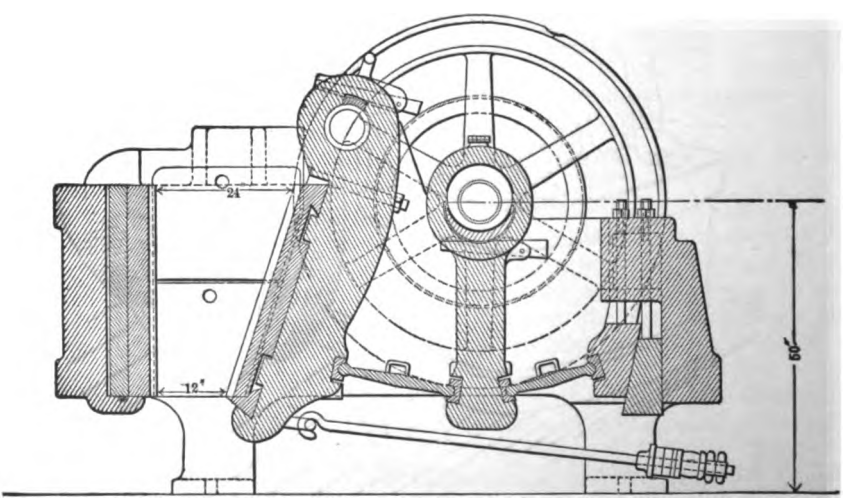

FIG. 10.—ELEVATION OF NO. 13 BREAKER, IN TABLE 5.

2. Put in swing jaw 2, tighten the caps 37 on swing jaw shaft tight enough to keep the shaft from moving, then put on the lock nuts.

3. Put in pitman 3, with large end of key nearest the toggle block 8. Let it drop on a block of wood high enough to clear bearings about six inches, then slide in the shaft 36. Notice the marks on one end of the shaft, so as to get the pulley end on the driving side.

4. Put in the lower box with thin wood packing. (This packing keeps the

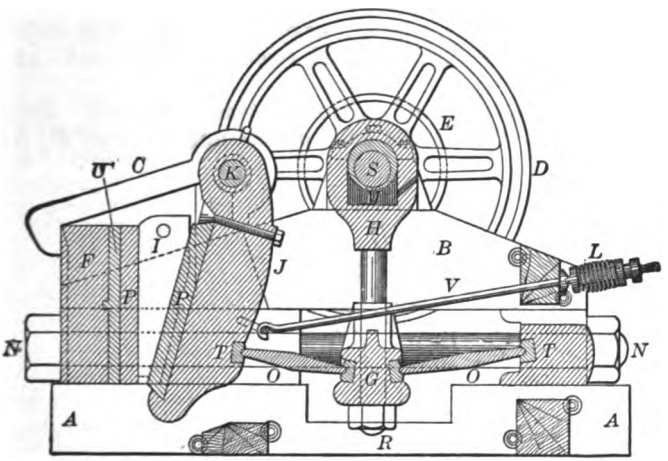

FIG. 11.—SECTION OF THE BLAKE CHALLENGE BREAKER.

A. Lower timber frame.
B. Upper " "
C. Clamps.
D. Fly-wheels.
E. Pulley.
F. Fixed jaw block.
G. Pitman toggle block.
H. Pitman half-box.
I. Cheeks.
J. Swing jaw.
K. Jaw shaft.
L. Spring.
M. Oil chamber.
N. Main tension bolts.
O. Toggles.
P. Jaw plates.
R. Pitman rod nuts.
S. Main eccentric shaft.
T. " toggle block.
U. Fixed jaw back.
V. Spring rod.

key from tightening the lower box to the shaft.) Next put in key from the back and tighten set screw.

5. Lower shaft into bearings and put on caps, having a piece of thin wood or leather under the caps, to keep them from being screwed down too tight on the shaft.

6. Put on fly-wheels according to marks on the shaft. Key them tight to clear the side of the bearings about $\frac{1}{16}$ inch, and bolt on the driving pulley to its place.

7. Put in the toggles 7, the longer in front, or between the swing jaw 2 and pitman 3. Let the wedge 10 be screwed down to the lowest point. By raising or lowering the wedge 10 with nut 44, the size of the product is changed. If this will not give the required size, change either front or back toggle, keeping the pitman 3 about upright. Put in the spring rod 16 and the rubber spring 17, compressing the rubber only tight enough to bring back the swing jaw 2.

8. Tighten the toggle block 8 with the nut 42. Oil bearings by the tubes 47, set in for the purpose. Apply power and breaker is ready for use. Keep iron plugs in the oil tubes to exclude the dust.

9. If the fixed jaw 4 should require to be cast up, use zinc, about $\frac{1}{4}$ inch thick. When the jaw plates are worn at the lower ends, they can be reversed. If the

steel toggle bearings should wear, they can also be reversed. It will then be necessary to drill oil holes on the other side for the oil tubes.

§ 16. Other Breakers of the Blake Type.—After the original patents of the Blake breaker ran out in 1878, manufacturers of mining machinery throughout the country began to seek improvements upon the original. Some of these changes are indicated in the extracts given below, from trade catalogues and from correspondence.

§ 17. *The "Blake Challenge Rock Breaker, or Sectional Cushioned Crusher"* is a new design put forward by Theodore A. Blake. It combines hard wood beams and wrought-iron bolts with the requisite cast-iron blocks. The object is to make a sectional breaker of great lightness and strength. The parts of it are indicated in Fig. 11.

The wear of the jaws is taken up by the main tension bolts *N*. Rubber cushions ⅜ inch thick are placed beneath the ends of the upper frame *B*, to relieve the

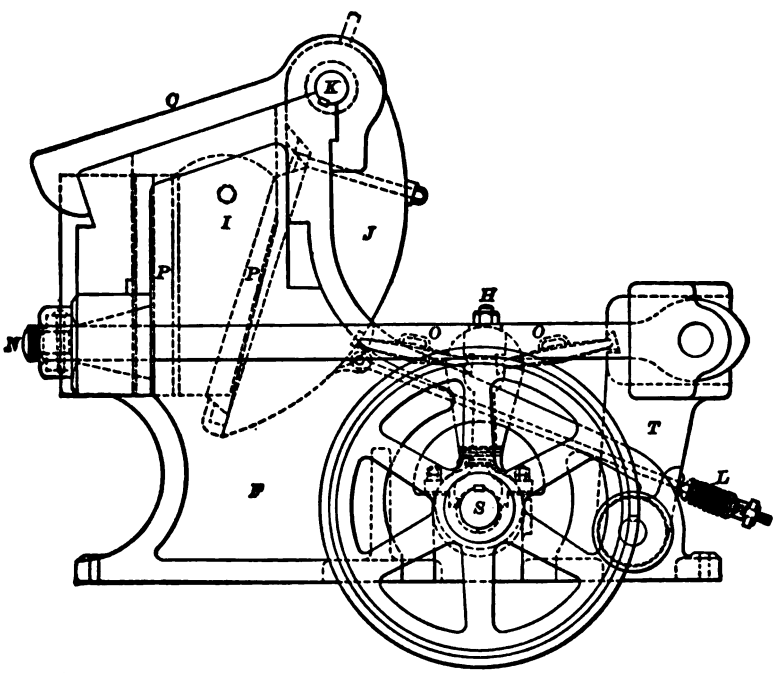

FIG. 12.—MONARCH (BLAKE TYPE) BREAKER, MADE BY THEODORE A. BLAKE.

C. Clamps.
F. Main frame.
H. Pitman.
I. Cheeks.
J. Swing jaw.
K. Swing jaw shaft.
L. Spring.
N. Tension bolt.
O. Toggles.
P. Jaw plates.
S. Main eccentric shaft.
T. Toggle block.

frame in case of undue stress. In the pitman head under the main eccentric bearing there is a chamber *M*, for oiled cotton waste for lubricating the pitman head.

§ 18. *Monarch Breaker.*—Theodore A. Blake has also made a large-sized breaker, which he calls "Monarch," with an inverted pitman, this form being

chosen in order to lighten the weight of the frame. It is illustrated in Fig. 12, and its details are given in Table 6.

TABLE 6.—SIZES OF THE MONARCH BREAKER. (From the Catalogue.)

Mouth Size. Inches.	Approximate Weight. Pounds.	Driving Pulley. Inches.	Horse Power required.
30x18	56,000	57x16	30
30x15	50,000	57x14	25
30x12	45,000	57x12	25
60x30	150,000	....	.....

At Pittsburg, Pa., a 30×18 machine running at 300 revolutions per minute and using 45 to 50 horse power, is reported to crush 16-inch cube limestone to 4-inch cube, at the rate of 30 tons per hour and at a cost of 2¾ cents per ton. The same machine on hard Vermillion hematite, crushes 600 tons per 24 hours to 3 inches at a cost of 3¼ cents per ton; on softer ores it crushes 750 tons per 24 hours.

§ 19. *S. R. Krom makes Sectional Breakers of the Blake Type* with two or four tension bolts. He uses toggles with cylindrical faces rolling upon plane surfaces to do away with the friction, thus saving wear, power, and oil. As shown in Fig. 19, the toggles are supported at each end by flattened gear teeth which occupy only 22.5% of the horizontal width of the bearing surface. To guard the machine against breaking by the feeding of a hammer head or other hard object, he uses upon the tension bolts either breaking cups of cast iron which yield by breaking or malleable washers which yield by bending, or he puts an elastic connection into his pitman by means of a car spring. For lubricating the under side of the eccentric journal, he uses a packing (Fig. 19), held in place by a spring. His jaw plates are made up of tempered steel bars running across the jaws, as in Fig. 19.

§ 20. *The Union Iron Works Breaker* has both the jaw plates keyed at the top by keys running the whole width of the jaw. The opposing grip is obtained from a dovetail in the back of the jaw plate and running across it, which is forced against the edge of a dovetail socket in the jaw.

§ 21. *A Duplex Breaker* made by the Farrel Foundry and Machine Co. serves to increase the capacity of the machine. This is, in effect, two breakers in one. Table 7 gives the sizes. The two jaws come forward alternately, each in its own compartment.

TABLE 7.—SIZES OF FARREL DUPLEX BREAKER. (From the Catalogue.)
Abbreviations.—H. P.=horse power; In.=inches; Rev.=revolutions.

No.	Mouth Size.	Capacity in Tons per Day of 24 Hours to Sizes Stated.			Size of Pulleys	Rev. per Minute.	H. P. required.	Weight.	Weight of Heaviest Piece.
	Inches.	Tons. In.	Tons. In.	Tons. In.	Inches.			Pounds.	Pounds.
15	40x6	480 to 2	288 to 1	144 to ½	30x9	300	20	21,500	12,400
16	40x10	960 to 3	720 to 2	480 to 1½	30x10	300	30	34,500	19,500

§ 22. *Brennan & Young make a breaker* which has its movable jaw divided vertically; one half advances while the other retreats. The two jaws are adjacent to each other in the same compartment. For details of this as found in the mills, see Table 9, Mill 89, breakers Nos. 1 and 2.

§ 23. *The lever pattern of Blake breaker* (see Fig. 13) is lighter and has parts more accessible than the pitman pattern for the same work. It has a large eccentric stroke causing undue wear. The power is transmitted through a belt,

a pulley, a crank 2, a connecting rod 3, a lever 4, pitman 5, and a pair of toggles 6, to the swing jaw 7.

§ 24. *The Giant Rock Breaker,* made by the Parke & Lacy Co., is of the Blake type and has a sectional cast-iron frame and four strong tension rods.

The jaw plates of this breaker, called pin plates, are made of cast steel, studded with special steel pins which are made very hard and driven into holes drilled in the plates. The cast steel wears more rapidly than the special steel pins, which therefore furnish projecting points. The take-up shell of the pitman in which the eccentric shaft works is provided with springs (see Fig. 18), and as the eccentric wears out of true the springs take up the lost motion and thereby prevent pounding, so that the machine may be run at a higher speed. The pitman is made hollow to lighten it.

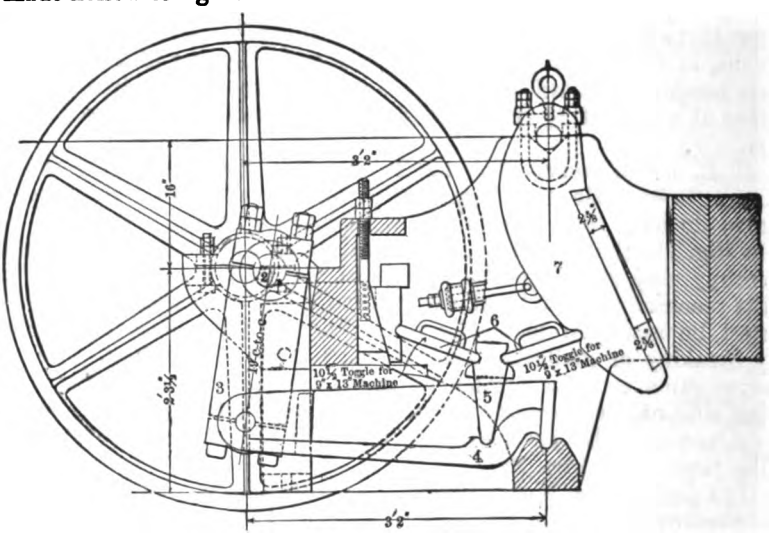

FIG. 13.—SECTION OF A 9×13-INCH BLAKE BREAKER OF THE LEVER PATTERN.

§ 25. *The Risdon Iron Works* use four or six tension rods on the cast-iron frame, making the breaker sectional. They place the wedge for adjusting the jaw opening at the bottom of the pitman, moving the toggle bearings apart or together, according as decreased or increased space between the jaws is desired. The wedge bolt is on a cast-iron plate which serves as breaking piece for the machine. A babbitted gib and spring key-bolt are used under the main shaft at the head of the pitman to take up wear and prevent pounding. The pitman is made hollow to lighten it.

§ 26. *The Joshua Hendy Machine Works* use four tension bolts with cast-iron frame, making their machines (the Hercules Rock Breaker) of the sectional pattern. They also use cast steel jaw plates.

§ 27. *In the breaker made by the Fulton Iron Works* the fixed jaw is held in place by four eye-bolts which act as the chief tension pieces of the machine. By loosening the two upper eye-bolts and slipping them to one side, the fixed jaw can be quickly revolved down to a horizontal position for repairs. The jaw plates consist of horizontal steel bars placed one above the other. A key-bolt and spring gib hold the babbitt and the under side of the eccentric at the head of the pitman to take up lost motion and prevent pounding. A spiral spring is used for opening the jaw. They also make a breaker with two heavy tension rods below and two shorter, lighter rods above, with a view to lightening the frame.

§ 28. *In a Blake breaker made by the Gates Iron Works,* the toggle block 8 (see Fig. 5) is made adjustable up and down, which affords a means of varying the angle between the toggles and consequently the amount of throw. The variation is given in Table 17.

§ 29. *A 28×30-inch Blake breaker used at the Minnesota Iron Mine* was modified so as to overcome trouble from stalling on hard ore. The angle between the toggles was flattened as much as possible and the throw of the eccentric was increased to 2 inches in order to retain a movement of 1¼ inches at the throat. The jaw plates were also made in four sections so that, as the bottom section wears faster than the others, it is only necessary to take it out, move the other three sections down one position, and put a new section in at the top.

§ 30. *Walburn & Swensen* use hammered steel for the eccentric shafts. *Friedrich Krupp Grusonwerk* of Germany has some 500 different models for chilled cast-iron jaws. The *Colorado Iron Works* use suitable oil cellars in all the boxes, to better the lubrication.

§ 31. *The Buchanan Rock Breaker* (see Fig. 14), made by the George V. Cresson Company, of New York, has its fixed jaw *B* pivoted at *P′*, which enables the adjustment of the space between the jaws to be made through the cross bar *L* and the tension bolts and lock nuts *E*. V-washers slip over the tension bolts between *L* and the frame and keep the fixed jaw firmly in place. This arrangement allows a variation in adjustment of 3 or 4 inches without changing the toggles. This breaker is built largely of steel and is made sectional for ease of transportation, and to give greater strength to the parts needing it.

In an older type of this breaker, the two jaws were both movable, one being pivoted at *L* and the other at a point about two-thirds the distance from the toggle up to *P*. The tops of the jaws *P* and *P′* were connected by two double eye-bars, the result being that the motion at *P′* was about one-half that imparted to the other jaw at the end of the toggle. The respective movements of the jaws, measured on a figure, were as shown in Table 8.

TABLE 8.—MOVEMENTS OF OLD BUCHANAN BREAKER.

	Movement of jaw B. Inches.	Movement of jaw B′. Inches.	Sum of two Movements. Inches.
At the top of jaws...	0.375	0.000	0.375
¼ from top.....	0.280	0.187	0.467
½ from top.....	0.187	0.375	0.562
At bottom.....	0.000	0.750	0.750

The defects of this breaker were that the movement was such as to cause more or less grinding which increased the wear of the jaw plates and the percentage of fines in the product. Also the eye-bars wore in a short time so that there was much lost motion.

A Buchanan breaker is used as the No. 1 breaker in Mill 90, but the author is unable to state whether it is of the old or new type.

§ 32. *Details of Blake Type of Breakers from the Mills.*—Table 9 gives the details of breakers of the Blake type used in the mills visited by the author.

It will be seen that out of 142 breakers 114 are of pitman pattern and 28 are of lever pattern, and that out of 136 breakers 116 are with solid cast-iron frame and 20 are with sectional cast-iron frame. Two columns for capacity are given. The "Actual Capacity" is the work the machine actually does during 24 hours. It is a common practice to work the breaker for only one shift or even less per day. The "Estimated Capacity" is the work it is capable of doing if worked constantly 24 hours per day. A breaker with jaw opening of about 9×15 inches appears to be much the commonest size. The column marked "Wet or Dry,"

TABLE 9.—DETAILS OF BLAKE TYPE OF BREAKERS GATHERED FROM THE MILLS VISITED.

Abbreviations.—C.=solid cast-iron frame; Cap.=capacity; Est.=estimated; griz.=grizzly; H. P.=horse power; h.= hours; In.=inches; L.=lever pattern; Min.=minute; P.=Pitman pattern; p.=per; picked=poor residue left after picking; Rev.=revolutions; S.=sectional bolted frame.

Mill No.	Breaker No.	Pattern.	No. Used.	Mouth Size. Inches.	Rev. per Min.	Feed Size.	Crushed to. In.	Actual Cap. per 24 h. per Breaker. Tons.	Est. Cap. per 24 hours. Tons.	Run.	Repairs p. year exclusive of wearing parts.	Est. H. P.
3	1	.....	1	6x8	450	Mine ore	.....	50	125	Dry	.....	...
10	1	P. C.	1	10x13	360	" "	¾	100-120	300	Wet	$100	...
12	1	L. C.	1	6x8	500	" " over 1½ in. griz.	1	.....	.....	.....	.....	...
13	1	P. C.	1	10x16	250	" " over 2 in. griz.	2	50	150	Dry	(c)	20
15	1	P. C.	1	6x10	350	" "	1	80	200	Wet	.....	...
16	1	L. C.	1	6x9	125	" "	¾	37½-40	112-120	Wet	None	4
17	1	L. C.	1	6x9	400	" " picked	½	.....	.....	.....	.....	...
18	1	P. C.	1	7x10	320	" "	1½	95	.....	.....	.....	...
19	1	P. C.	1	9x11	.....	" " picked	1½	.....	.....	.....	.....	...
20	1	P. S.	1	8x10	300	" " over 1¼ in. griz.	1½	100	200	Dry	.....	...
21	1	P. C.	1	7x10	250	" "	1	40-50	.....	Wet	.....	...
23	1	P. C.	1	9x15	.....	" "	1½	100	.....	.....	.....	...
24	1	L. C.	1	9x15	214	" "	½	109	140	Wet	$155	...
25	1	L. C.	10	9x15	180	" "	1½	90	125	Dry	$90	7
27	1	P. C.	2	9x15	250	" " picked	1½	80	150	Wet	$90	...
28	2	P. C.	1	7x12	250	" " over 1¼ in. griz.	1½	100	.....	Dry	.....	7
29	1	P. C.	2	8x10	400	" "	1½	350	.....	.....	.....	...
30	(a)	P. C.	1	9x15	340	Selected shipping ore	2½	.....	.....	Dry	.....	10
30	(b)	P. C.	1	9x15	340	Mine ore picked, over 1¼ in. griz.	2½	.....	.....	Dry	.....	25
31	1	P. C.	1	7x10	350	" " picked	1½	200	230	Wet	.....	7
32	1	P. C.	2	9x15	280	" " over 1½ in. griz.	1½	250	350	Dry	None	12
33	1	P. C.	1	7x11	224	" "	.....	75	.....	Wet	.....	...
36	1	P. C.	1	7x12	.....	" " over 1½ in. griz	.....	60	.....	Dry	.....	...
37	1	P. C.	1	9x15	.....	" "	.....	.....	.....	.....	.....	...
38	1	P. C.	2	10x20	300	" " over 1 in. griz.	1½	300	.....	Dry	.....	...
	2	P. C.	4	7x10	300	(k) On No. 1 trommel 1½ inches	1	.....	.....	.....	.....	...
39	1	P. C.	2	9x15	350	Mine ore	2½	250	.....	Wet	.....	...
	2	P. C.	2	4x10	250	(k) On No. 1 trommel, 2½ inches	1	.....	.....	Wet	.....	...
40	1	P. C.	2	9x15	275	Mine ore	2	300	400	Wet	None	...
	2	P. C.	4	7x10	275	(k) On No. 1 trommel, 20 mm	1	80	100	Wet	None	...
41	1	P. C.	1	9x15	250	Mine ore	2	300	400	Dry	Small	...
	2	P. C.	1	7x10	250	(k) On No. 1 trommel, ⅞ inch	1	.....	100	Dry	Small	...
44	1	P. C.	11	24x36	190	Mine ore, over 3½ in. griz.	12	480	.....	Dry	.....	...
	2	P. S.	11	17x24	200	(k) On No. 2 grizzly, 3½ inches	3½	.....	.....	Dry	.....	...
46	1	P. C.	2	14x22	84	Mine ore over 4 in. griz.	4	.....	.....	Dry	.....	...
46	2	P. C.	2	13x20	140	" " over 4 in. griz.	4	.....	.....	Dry	.....	...
47	1	P. C.	3	18x24	84	Mass copper rock (m)	5	.....	.....	Dry	(e)	...
	2	L. C.	6	9x15	120	From No. 1 breaker	2¾	.....	.....	Dry	.....	...
	3	P. C.	6	13x20	108	Copper rock (m)	3	.....	.....	Dry	.....	...
48	1	P. C.	4	18x24	132	Mine ore over 4 in. griz.	4	.....	.....	Dry	.....	...
	1	L.	6	8x15	216	" " over 4 in. griz.	4	.....	.....	Dry	.....	...
55	1	P. C.	1	10x15	250	" "	1½	50	130	Dry	(p)	7
57	1	P. C.	3	9x15	200	" " over 2 in. griz.	1½	15	75	Wet	(f)	14
59	1	L. C.	2	9x14	200	" " over 3 in. griz.	2	20	.....	Dry	.....	...
62	1	P. S.	3	8x12	240	" " over 1½ in. griz.	1½	24	50	Dry	(g)	15
63	1	P. C.	1	9x12	250	" " over griz.	1½	15	.....	Dry	.....	...
64	1	P. C.	1	9x12	200	" " over 1½ in. griz.	1	116	200	Dry	$90	7
65	1	P. S.	1	10x16	200	" " over 2 in. griz.	2	110	.....	Dry	.....	...
68	1	P. C.	3	9x15	250	" " over 1½ in. griz.	1½	43	.....	Dry	(r)	10
72	1	.....	1	9x16	.....	" " over 2 in. griz.	1½	100	.....	Dry	.....	...
73	1	P. S.	2	12x16	195	" " over 2 in. griz.	1½	75	.....	Dry	.....	...
74	1	P. S.	2	12x16	195	" " over 2 in. griz.	1½	75	.....	Dry	.....	...
82	1	P. C.	2	9x15	250	" " over 1½ in. griz.	1½	43	.....	Dry	(r)	10
84	2	P. C.	2	9x15	200	(n) On trommel, 1 inch	1½	under50	100	Wet	(h)	12
85	1	P. C.	1	7x9	220	Mine ore	1½	.....	.....	Wet	.....	...
86	1	P. C.	1	7x10	220	" "	1	75	.....	.....	.....	...
87	(d)	P. C.	1	8x12	252	" "	1½	.....	.....	Dry	.....	...
87	1	P. C.	1	9x15	250	" "	1½	125	.....	Dry	.....	...
88	1	P. C.	1	7x12	.....	.....	1½	75	.....	Wet	.....	...
89	1	P. C.	1	12x24	270	Mine ore	2	125	300	Dry	None	15
	2	P. C.	1	12x24	270	Product of No. 1 breaker	1	125	300	Dry	.....	...
	3	P. C.	2	9x17	270	" " No. 2 breaker	¾	68	150	Dry	.....	...
90	1	P. C.	1	9x15	200	Mine ore	1½	.....	.....	Dry	.....	...
92	1	P. C.	1	15x30	270	" " over 1½ in. griz.	4	.....	.....	Dry	.....	...
	2	P. C.	1	(q)	276	(j)	¾	.....	.....	Dry	.....	...
93	1	.....	1	9x15	.....	Mine ore	1½	60	200	Wet	.....	...

(a) For shipping ore. (b) For concentrating ore. (c) Rubber springs, cost $3.50 each, last 2-4 weeks. (d) Sampler. (e) 12 days a year. (f) Less than $30 per breaker per year. (g) Very hard ore, so that pitman sometimes breaks. (h) Babbitt for bearings. Jaw springs. (j) Product of No. 1 breaker, picked; also stuff through 1½ inch grizzly on ½ inch grizzly, picked. (k) Through No. 1 breaker. (m) Over 2¾ inch grizzly and from fall hammer. (n) Through Comet breaker, 3 inches. (p) Babbitt once in 2 years, nothing else. (q) This is a Duplex breaker with each mouth 6x20 inches. (r) Babbitt bearings annually, cost $10.

Digitized by Google

indicates whether water is or is not fed with the ore. This question is discussed later in § 56.

§ 33. *Wear of Blake Breakers.*—Table 10 has been constructed to show the

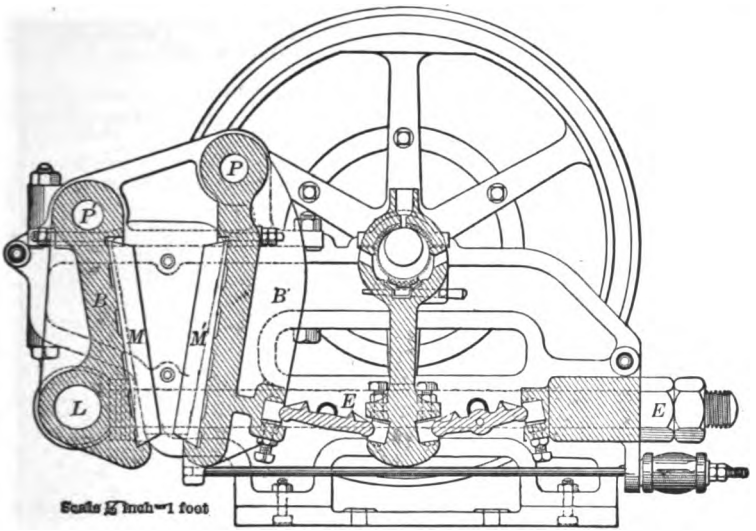

FIG. 14.—NEW BUCHANAN BREAKER.

wear of metal in Blake breakers. Four columns, gross and net wear, and gross and net cost per ton, have been computed. The gross wear is found by dividing the weight of the new piece, for example, a jaw plate, by the number of tons it crushes, called its life in tons. In computing net wear, however, the weight of the worn-out piece is subtracted from its weight when new before dividing by the life in tons crushed. The gross cost is found by dividing the cost of the piece by the number of tons it crushes before being worn out. In computing the net cost per ton, the value of the worn-out piece is substracted from its cost when new, before dividing. The cost of changing jaw plates should be included as part of the original cost in computing the cost of the plates. The reader is referred to § 53, under spindle breakers, where the importance of this item is fully demonstrated.

(*b*) JAW BREAKERS WITH EQUAL MOTION ON THE COARSE AND FINE LUMPS.

§ 34. *The Western Wheeled Scraper Co.* advertise a breaker with cast-iron frame, fixed jaw and movable jaw. In this machine, the movable jaw is mounted upon a frame running upon rollers. The frame and movable jaw are pushed forward twice each revolution of the fly-wheel a distance of about 0.4 inch, by an elliptical cam acting upon a roller tappet; the jaw is returned in the usual way by rod and rubber spring.

§ 35. *The Forster Breaker,* made by Totten & Hogg (see Fig. 15), has oscillating about a vertical pin *L,* a horizontal lever *A N,* with its long arm about seven times the length of the short one on the center line, or 4.7 times the distance from the pin *L* to the lateral edges of the jaw plates. The power is applied by the belt pulley, *D,* the eccentric *H,* and the horizontal connecting rod *G,* to the end of the lever arm *A.* This requires a ball and socket joint at *G;* and in addition the eccentric strap has a lateral motion on the eccentric. The movable jaw *N* is placed across the end of the short arm and oscillates sidewise in front of the fixed jaw plate *B.* The motion given is of the same amount and kind at

TABLE 10.—WEAR FOR BLAKE BREAKERS.

Abbreviations.—B.=brass; Ch. C. I.=chilled cast iron; Ch. F. I.=chilled franklinite iron; Ch. I.=chilled iron; Chr. S.=chrome steel; C I.=cast iron; C. M. S.=cast manganese steel; C. P.=cheek plates; C. S.=cast steel; I.=iron; J. P.=jaw plates; lb.=pound; M.=movable jaw plates; Ma. S.=machinery steel; M. C. I.=malleable cast iron; M. S.=manganese steel; S.=steel; S. C. I.=soft cast iron; S. I.=soft iron; St.=stationary jaw plate; T.=toggle; T. B.=toggle bearing; Wh. I.=white iron; W. I.=wrought iron; W. S.=wrought steel; yrs.=years.

Mill No.	Breaker No.	Wearing Part.	Material.	Total Weight. Pounds.		Costs per lb. New. Cents.	Sell per lb. Old. Cents.	Life.		Wear per ton. Pounds.		Cost per ton. Cents.	
				New.	Old.			Days.	Tons.	Gross.	Net.	Gross.	Net.
10	1	J. P.	Ch. I.	.....	.....	(a)	....	10	.....	.....	.....	.....	.....
13	1	2 J. P.	"	928	900	2¾	0.8	300	10,000	0.0928	0.0028	0.255	0.183
		2 C. P.	"	50	40	2¾	0.8	300	10,000	0.005	0.001	0.0137	0.0105
		2 T.	"	104	100	3.8	0.8	150	5,000	0.0208	0.0008	0.079	0.063
		4 T. B.	C. S.	80	72	15	....	300	10,000	0.008	0.0008	0.12	.....
15	1	J. P.	Ch. I.	.....	.....	.....	....	.....	.....	.....	.....	.....	.....
16	1	J. P.	"	.....	.....	.....	....	(b)	.....	.....	.....	.....	.....
		C. P.	"	.....	.....	.....	....	(b)	.....	.....	.....	.....	.....
17	1	J. P.	"	.....	.....	2½	....	12	.....	.....	.....	.....	.....
		C. P.	"	.....	.....	2½	....	12	.....	.....	.....	.....	.....
18	1	J. P.	"	.....	.....	.....	....	.....	.....	.....	.....	.....	.....
20	1	2 J. P.	C. M. S. (c)	200	75	.....	0.8	180	10,000	0.02	0.0125	.....	.....
		2 C. P.	C. I.	.....	.....	4	0.6	(d)	(e)	.....	.....	.....	.....
		2 T.	"	.....	.....	4	0.6	.....	.....	.....	.....	.....	.....
		4 T. B.	W. S. or I.	.....	.....	6	0.6	(f)	.....	.....	.....	.....	.....
21	1	2 J. P.	Chr. S.	280	.....	12.1	0.4	72	3,200	0.0875	.....	1.06	.....
		2 C. P.	"	90	.....	10	0.4	144	6,400	0.0140	.....	0.14	.....
24	1	2 J. P.	Ch. I.	540	470	3¼	¼	80	3,250	0.166	0.0215	0.54	0.50
		2 C. P.	C. I.	150	140	2¾	0.8	300	10,000	0.015	0.0015	0.041	0.080
		2 T.	"	110	108	2¼	¼	40	4,360	0.025	0.0004	0.057	0.051
		4 T. B.	C. S.	.....	.....	.....	....	.....	.....	.....	.....	.....	.....
25	1	2 J. P.	Ch. I.	416	332	3½	½	300	27,000	0.015	0.0024	0.054	0.047
		2 C. P.	"	76	60	3½	½	160	14,400	0.0053	0.0011	0.018	0.016
		2 T.	"	134	90	3½	½	550	49,500	0.0028	0.0009	0.0095	0.0086
		4 T. B.	"	60	32	3½	½	300	27,000	0.0032	0.0010	0.0078	0.0072
27	1	2 J. P.	Chr. S.	600	300	6	0	42	3,360	0.179	0.088	1.07	1.07
		2 C. P.	C. I.	140	110	.....	....	70	5,600	0.025	0.0054	.....	.....
		T.	"	.....	.....	.....	....	(g)	.....	.....	.....	.....	.....
		T. B.	W. I.	.....	.....	.....	....	(g)	.....	.....	.....	.....	.....
28	(h) 2	J. P.	Ch. I.	.....	.....	.....	0	.....	.....	.....	.....	.....	.....
		C. P.	"	.....	.....	.....	0	.....	.....	.....	.....	.....	.....
		T.	C. I.	.....	.....	.....	0	.....	.....	.....	.....	.....	.....
		T. B.	"	.....	.....	.....	0	.....	.....	.....	.....	.....	.....
29	(i)	2 J. P.	Ch. I.	800	.....	(j)	½	.....	.....	.....	.....	.....	.....
		C. P.	"	.....	.....	.....	....	.....	.....	.....	.....	.....	.....
30	(k)	2 J. P.	"	400	300	4	½	210	25,000	0.016	0.004	0.064	0.058
31	1	2 J. P.	C. I.	350	250	4½	¾	21	4,800	0.073	0.021	0.328	0.239
		2 C. P.	"	200	150	4½	¾	21	4,800	0.042	0.010	0.187	0.163
		T.	M. C. I.	.....	.....	.....	....	360	78,000	.....	.....	.....	.....
		T. B.	S.	.....	.....	.....	....	180	39,000	.....	.....	.....	.....
32	1	2 J. P.	Ch. I.	400	.....	4	½	14	3,500	0.114	.....	0.457	.....
		2 C. P.	C. I.	.....	.....	4	½	14	3,500	.....	.....	.....	.....
		2 T.	Ch. I.	150	(l)	4	½	21	6,000	0.025	.....	0.100	.....
		4 T. B.	M. S.	72	(l)	10	....	16	4,000	0.018	.....	0.180	.....
33	1	2 J. P.	C. I.	1,080	.....	.....	....	30	8,000	0.135	.....	.....	.....
33	2	2 J. P.	Ch. I.	270	.....	.....	....	70	.....	.....	.....	.....	.....
39	1	2 J. P.	C. S.	M. 500, St. 515	.....	.....	....	45	11,375	0.089	.....	.....	.....
39	2	2 J. P.	"	M. 180, St. 205	.....	.....	....	35	.....	.....	.....	.....	.....
40	1	2 J. P.	M. S.	840	450	9½	....	70	21,000	0.040	0.014	0.38	.....
		2 C. P.	"	166	140	10	....	90	27,000	0.006	0.001	0.061	.....
		2 T.	I.	.....	.....	.....	....	180	54,000	.....	.....	.....	.....
		4 T. B.	M. S.	84	.....	15	....	120	36,000	0.002	.....	0.025	.....
40	2	2 J. P.	"	240	130	9½	....	126	3,780	0.063	0.029	0.60	.....
		2 C. P.	"	60	50	10	....	90	2,700	0.022	0.0037	0.22	.....
		2 T.	I.	.....	.....	.....	....	180	5,400	.....	.....	.....	.....
		4 T. B.	M. S.	56	.....	.....	....	120	3,600	0.016	.....	.....	.....
41	1	2 J. P.	M. S. / Ch. I.	M. 384 / St. 428	340 / 380	12 / 4½	... / ¾	56 / 14	20,000 / 5,000	0.0406 / 0.162	0.004 / 0.018	0.487 / 0.73	..... / 0.62
		2 C. P.	Ch. I.	160	140	4½	¾	16	6,000	0.027	0.0033	0.12	0.102
		2 T.	"	112	.....	4½	¾	120	36,000	0.006	.....	0.014	.....
		4 T. B.	.....	64	.....	.....	....	120	36,000	0.0018	.....	.....	.....
41	2	2 J. P.	"	M. 132 / St. 150	115 / 135	4½	¾	30	.....	.....	.....	.....	.....
		2 C. P.	"	66	60	4½	¾	16	.....	.....	.....	.....	.....
		2 T.	"	80	.....	4½	¾	225	.....	.....	.....	.....	.....

(a) $15.20 per set. (b) For years. (c) These are pin plates with pins of tool steel which are set in ½-inch drilled holes and are spaced ½ inch apart. (d) 180 to 360 days. (e) 10,000 to 20,000 tons. (f) Several years. (g) 1 to 180 days; break and cut. (h) Used only in case of emergency. (i) For shipping ore. (j) 3½ cents at Chicago; 5.4 cents at mill. (k) For concentrating ore; used only in case of emergency. (l) Slight loss.

TABLE 10.—WEAR FOR BLAKE BREAKERS.—*Concluded.*

Mill No.	Breaker No.	Wearing Part.	Material.	Total Weight. Pounds. New.	Total Weight. Pounds. Old.	Costs per lb. New. Cents.	Sell per lb. Old. Cents.	Life. Days.	Life. Tons.	Wear per ton. Pounds. Gross.	Wear per ton. Pounds. Net.	Cost per ton. Cents. Gross.	Cost per ton. Cents. Net.
41	2	4 T. B.	S.	40	.....	.....	....	225	.....	.....	.....	.....	.....
44	1	2 J. P.	Ch. I.	.....	.....	.....	....	.....	.....	.....	.....	.....	.....
44	2	2 J. P.	"	.....	.....	.....	....	.....	.....	.....	.....	.....	.....
46	1	2 J. P.	Ch. F. I.	2,600	.....	.....	....	900	.....	.....	.....	.....	.....
46	2	2 J. P.	" "	1,900	.....	.....	....	300	.....	.....	.....	.....	.....
47	1	2 J. P.	Ch. I.	M. 2,135 St. 1,100	1,500 900	3	½	120 270	.....	.....	.....	.....	.....
		2 C. P.	"	482	300	3	½	90	.....	.....	.....	.....	.....
		2 T.	C. I.	406	.....	3	½	600	.....	.....	.....	.....	.....
47	2	2 J. P.	Ch. I.	M. 310 St. 339	220 280	3	½	90 180	.....	.....	.....	.....	.....
		2 C. P.	"	600	200	3	½	60	.....	.....	.....	.....	.....
		2 T.	C. I.	248	240	3	½	600	.....	.....	.....	.....	.....
47	3	J. P.	Ch. I.	M. 780 St. 840	600 700	3	½	120 280	.....	.....	.....	.....	.....
		2 C. P.	"	384	200	3	½	90	.....	.....	.....	.....	.....
		2 T.	C. I.	632	.....	3	½	600	.....	.....	.....	.....	.....
48	1	2 J. P.	Ch. F. I.	(m)	.....	.....	....	(n)	.....	.....	.....	.....	.....
54	1	2 J. P.	Chr. S.	750	300	6	0	M. 120 St. 90	6,000 4,500	0.143	0.086	0.857	0.857
		2 C. P.	"	130	.....	6	0	.....	.....	.....	.....	.....	.....
		2 T.	"	150	.....	6	0	.....	.....	.....	.....	.....	.....
		4 T. B.	"	.....	.....	6	0	.....	.....	.....	.....	.....	.....
57	1	2 J. P.	Ch. I.	457	300	4	1½	365	5,475	0.083	0.029	0.33	0.251
		2 C. P.	"	112	.....	5	1½	365	5,475	0.020	.....	0.102	.....
		2 T.	.....	.....	.....	.....	....	5 yrs.	.....	.....	.....	.....	.....
		4 T. B.	.....	.....	.....	.....	....	(o)	.....	.....	.....	.....	.....
59	1	2 J. P.	C. I.	570	250	4	1½	300	6,000	0.095	0.053	0.38	0.32
		2 C. P.	"	670	300	5	1½	300	6,000	0.112	0.078	0.56	0.48
62	1	2 J. P.	M. S. (p) Chr. S. Wh. I.	441	140	10 10 2½	0 0 0	60 45 30	1,440 980 720	0.306 0.450 0.612	0.209 0.307 0.418	3.06 4.50 1.53	3.06 4.50 1.53
		2 C. P.	S.	82	41	11½	0	180	4,320	0.019	0.009	0.218	0.218
		2 T.	C. S.	95	80	3½	0	365	8,760	0.011	0.002	0.038	0.038
		4 T. B.	S.	40	35	9	0	365	8,760	0.004	0.001	0.041	0.041
64	1	2 J. P.	M. S. Chr. S. Ch. I.	468	140	10 8 5	0.35 0.35 2	104 65 26	12,000 7,500 3,000	0.039 0.062 0.156	0.027 0.044 0.109	0.39 0.50 0.78	0.39 0.49 0.69
		2 C. P.	M. S. Chr. S. Ch. I.	90	72	10 8 6	0.35 0.35 2	130 78 21	15,000 9,000 2,250	0.006 0.010 0.040	0.001 0.002 0.008	0.060 0.080 0.24	0.058 0.077 0.160
		2 T.	S. I.	130	120	6	2	620	72,000	0.002	0.0001	0.011	0.0075
		4 T. B.	Ma. S.	68	48	10	0	620	72,000	0.001	0.0003	0.009	0.009
68	1	2 J. P.	Chr. S.	M. 440, St. 350	400	(q) 7	1½	180	7,800	0.101	0.076	0.912	0.835
		2 C. P.	Ch. I.	144	70	(r) 3½	½	180	7,800	0.018	0.009	0.074	0.069
		2 T.	C. S.	122	100	(s) 4½	½	180	7,800	0.016	0.003	0.094	0.087
		4 T. B.	"	60	32	(s) 4½	½	180	7,800	0.008	0.004	0.046	0.044
(t) 68	.....	.....	.....	.....	.....	.....	....	.....	.....	.....	.....	.....	.....
84	2	2 J. P.	Ch. I.	800	500	4	¾	56	2,000	0.400	0.150	1.600	1.412
		2 C. P.	"	100	40	4	¾	84	3,000	0.033	0.020	0.133	0.123
		2 T.	C. I.	100	60	3	¾	365	13,000	0.0076	0.003	0.022	0.019
		4 T. B.	W. I.	100	80	5	0	365	13,000	0.0076	0.0015	0.038	0.038
86	1	J. P.	Ch. I.	.....	.....	.....	....	(u)	.....	.....	.....	.....	.....
87	(v)	2 J. P.	"	200	160	8	½	270	.....	.....	.....	.....	.....
		2 C. P.	"	60	40	8	½	.....	.....	.....	.....	.....	.....
87	1	2 J. P.	Chr. S. Ch. I.	400	300	 8	.... ½	120 80	15,000 10,000	0.026 0.040	0.007 0.010	.... 0.32	.... 0.30
		2 C. P.	Chr. S. Ch. I.	80	60	 8	.... ½	180 120	22,500 15,000	0.004 0.005	0.001 0.001	.... 0.043	.... 0.041
		T.	S. C. I.	.....	.....	.....	....	.....	.....	.....	.....	.....	.....
		T. B.	W. I.	.....	.....	.....	....	.....	.....	.....	.....	.....	.....
88	1	J. P.	Ch. I.	.....	.....	.....	....	.....	.....	.....	.....	.....	.....
89	1	2 J. P.	Ch. C. I.	1,280	.....	2¾	½	900	112,500	0.011	.....	0.03	.....
		C. P.	" "	.....	.....	2¾	½	900	112,500	.....	.....	.....	.....
		T.	Wh. I.	.....	.....	2	½	.....	.....	.....	.....	.....	.....
		T. B.	B.	.....	.....	18	7	.....	.....	.....	.....	.....	.....
89	2	J. P.	Ch. C. I.	.....	.....	2¾	½	.....	.....	.....	.....	.....	.....
89	3	J. P.	" "	.....	.....	2¾	½	.....	.....	.....	.....	.....	.....
90	1	2 J. P.	Ch. I.	(w)	.....	5	....	.....	2,000	0.171	.....	0.8	.....
92	1	J. P.	"	.....	.....	.....	....	.....	.....	.....	.....	.....	.....
92	1	J. P.	.....	(x)	.....	.....	....	25	2,000	0.162	.....	.....	.....

(m) 2,769 to 3,609 pounds for an 18x24-inch breaker and 1,800 for an 8x15-inch. (n) 100 to 150 days. (o) 10 years. (p) Material now used. (q) Plus 2 cents freight. (r) Plus ½ cent freight. (s) Plus 1¼ cents. (t) The data for this is just the same as for Mill 68, breaker No. 1. (u) 100 to 125 days. (v) Se[illegible] 720 pounds. (x) One weighs 125, the other 200 pounds.

the top and bottom at any one vertical section of the mouth and throat, but it varies greatly in both respects between the sides and the middle of the jaws.

In Mill 67, a Forster breaker is used for dry crushing mine ore preparatory to stamping. Its mouth is 12×24 inches and it crushes to 1½ inches running at 200 revolutions per minute. Its actual stint is 40 to 60 tons per day of 10 hours,

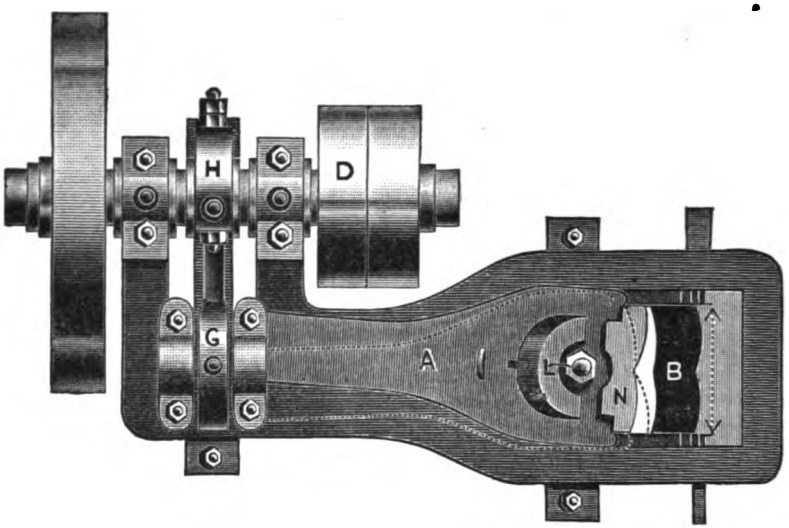

FIG. 15.—PLAN OF FORSTER BREAKER.

equal to 96 to 144 tons per 24 hours. It uses 12 indicated horse power. Its maximum capacity is, however, somewhat higher than the above figure. Mill 67 substitutes for the single jaw plates usually furnished, soft back pieces of cast iron, containing the dovetail sockets into which are slipped the dovetails of the little blocks which form the wearing surfaces. These blocks are of manganese iron and are eight in number for the movable, and ten for the stationary jaw. The wear of these blocks is shown in Table 11.

TABLE 11.—WEAR FOR FORSTER BREAKER IN MILL 67.

Abbreviations.—Lbs.=pounds; Cts.=cents.

Wearing Part.	Material.	Weight. New.	Weight. Old.	Cost, New, per Pound.	Sells, Old, per Pound.	Life.		Gross Wear per Ton Crushed.	Net Wear per Ton Crushed.	Gross Cost per Ton Crushed.	Net Cost per Ton Crushed.
		Lbs.	Lbs.	Cts.	Cts.	Days.	Tons.	Lbs.	Lbs.	Cts.	Cts.
Movable Jaw Plates.....	Manganese iron...	540	340	3	0.6	16	820	0.658	0.244	1.98	1.73
Stationary Jaw Plates.....	Manganese iron...	500	330	3	0.6	16	820	0.609	0.219	1.89	1.60

§ 36. *The Blake Multiple Jaw Breaker* (see Fig. 16) belongs to class (*b*). In this machine three pairs of jaws, *I, J, J, J,* 30 inches wide, are caused to approach one another by the toggles *O, O,* and are caused to recede from each other by rods and springs.

(*c*) JAW BREAKERS HAVING THE GREATEST MOVEMENT ON THE LARGEST LUMP, WITH THE SWING JAW PIVOTED BELOW.

§ 37. THE DODGE BREAKER, invented by M. B. Dodge, and now manufactured in an improved form by Parke & Lacy Co., is shown in Figs. 17 and 18. It

consists of a solid cast-iron frame 2, carrying boxes for the fulcrum pin 4 and

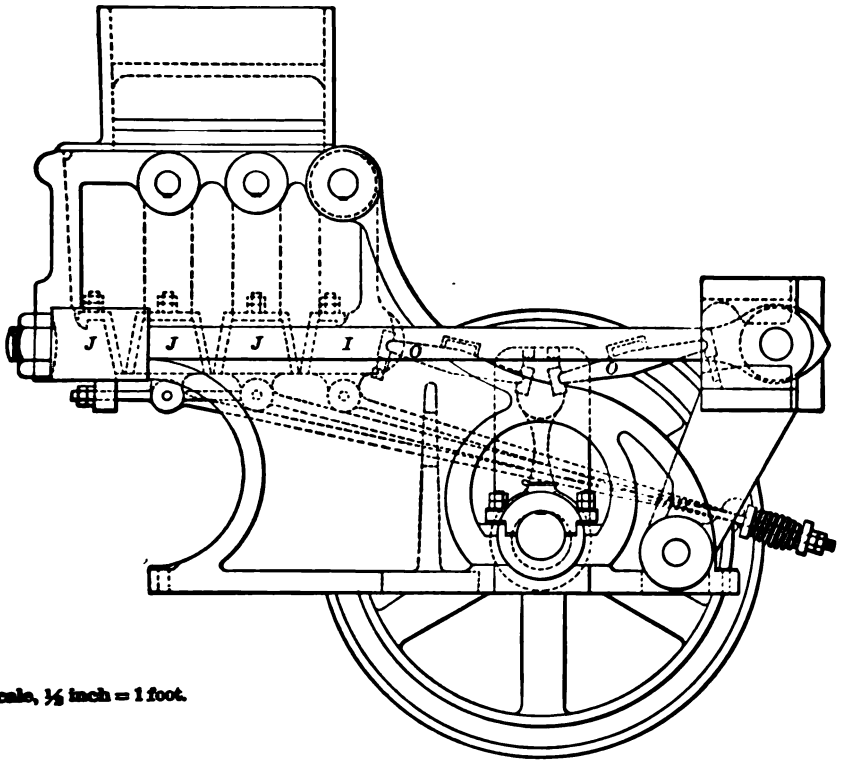

FIG. 16.—SECTION OF THE BLAKE MULTIPLE-JAW BREAKER.

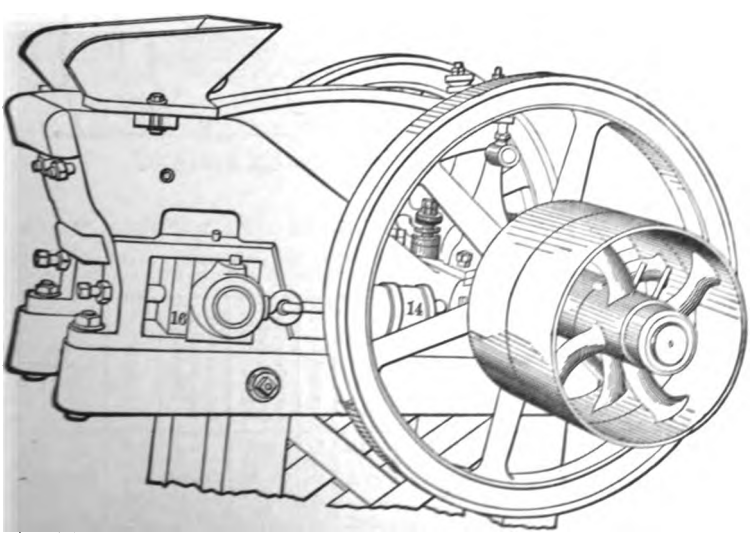

FIG. 17.—PERSPECTIVE OF THE DODGE BREAKER.

the eccentric shaft 8. Bolted to this frame is the fixed jaw plate 3. The mova-

ble jaw 1′, to which is bolted the jaw plate 3′, oscillates upon the fulcrum pin 4 and the lost motion in the pin and boxes is taken up by the springs 14. The operation depends upon the use of the powerful lever 1, of which 1″ is the long arm and 1′ is the short arm. This lever consists of a web strengthened by heavy flanges. The upward or crushing movement is imparted to the long arm of the lever by an eccentric 8, acting through a connecting rod 7 and the bearing on the head of 7. Projecting pins 7′ which are a part of 7, are connected to the long arm by connections and springs 15, thus providing for the return movement of the long arm and also to take up lost motion. The cap of the connecting rod is provided with springs to take up the wear of the eccentric. The width of opening at the throat is adjusted to take up for wear by removing plates 16 from front to back of the fulcrum boxes at the same time setting up the set screw 6. Power is applied by a belt on the pulley 10. The machine consumes power in crushing rock for a little less than half a revolution and absorbs power in the fly-wheel for the remainder. It is therefore an intermittent machine.

The sizes in which the machine is made are given in Table 12.

TABLE 12.—SIZES OF DODGE BREAKER. (From Parke & Lacy Catalogue.)

No.	Mouth Size. Inches.	Capacity per 24 Hours. Tons.	Size of Pulley. Inches.	Revolutions per minute.	Horse power Required.	Weight. Pounds.
1	6 x 6	24 to 48	12 x 5	350	3	1,200
2	7 x 8	72 to 96	16 x 6	300	5	2,200
3	8 x 12	96 to 144	24 x 8	250	7	4,600

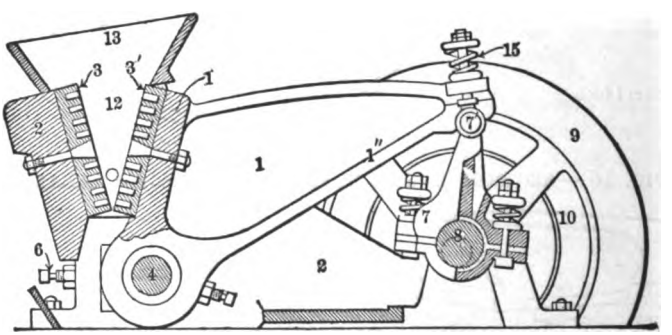

FIG. 18.—SECTION OF THE DODGE BREAKER.

TABLE 13.—DETAILS OF DODGE TYPE OF BREAKERS GATHERED FROM MILLS VISITED.

Abbreviations.—C.=solid cast-iron frame; cap.=capacity; Est.=estimated; griz.=grizzly; H. P.=horse power; h.=hours; in.=inches; L.=lever pattern; min.=minute; P.=pitman pattern; Rev.=revolutions.

Mill No.	Breaker No.	Pattern.	Number Used.	Mouth Size. Inches.	Rev. per min.	Feed Size.	Crushed to. In.	Actual cap. per breaker Per 24 Hours. Tons.	Est. maximum cap. per 24 h. Tons.	Run.	Repairs besides wearing parts.	Est. H. P.
22	1	P. (a)	2	8 x 16	366	Mine ore over 1 in. griz.	1	200	.....	Dry.	(b)	25
26	2	L.	2	11 x 15	214	(c)	¾	30-50	240	Dry.	(d)	(e) 15
28	1	L.	1	9 x 15	190	Mine ore on 1¼ in. griz.	1¼	60-70	150-170	Dry.	$50 per year.	12
53	1	L. C.	3	6 x —	260	Run of mine.	⅝	30	.....	Dry.	None.	5
90	2	(f)	1	3 x 30	240	(g)	⅝	80	192	Dry.	.....	.....

(a) Made by S. R. Krom. (b) Broken 2 jaws in 3 years; put in 2 jaw shafts; used 2 sets cast-steel stuffing box glands on jaw shaft; rod breaks every 3 months; spring breaks every 6 months. (c) Through Cornet 3½ in. on No. 1 trommel 1¼ in. (d) Trunnion blocks last 2 years; miscellaneous bolts. (e) This is the result of actual measurement. (f) Buchanan granulator; split jaw; made by Becker Foundry and Machine Co.; this breaker chokes if over-fed. (g) Through No. 1 breaker on No. 1 trommel ¾ in.

S. R. Krom makes a breaker of this class (see Fig. 19), in which the lever is replaced by pitman and toggles. The Colorado Iron Works Co. makes a modified Dodge breaker which they call the "Black Hawk."

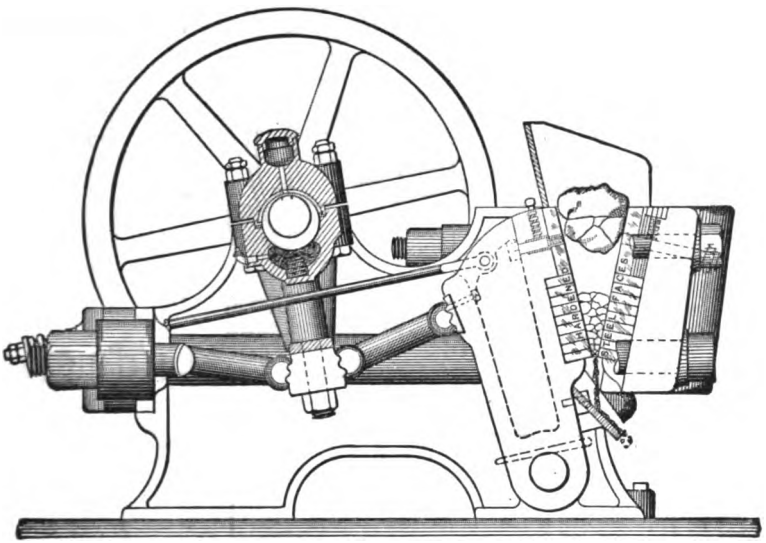

FIG. 19.—SECTION OF KROM'S STANDARD ROCK BREAKER.

§ 38. *Sizes and Wearing Parts of Dodge Breakers.*—Tables 13 and 14 show the data obtained on the Dodge type of breakers from the mills visited. The general explanations of Tables 9 and 10 (Blake type of breakers), in § 32 and § 33, also apply here.

TABLE 14.—WEAR OF DODGE BREAKERS.

Abbreviations.—Ch. I.=chilled iron; C. I.=cast iron; C. P.=cheek plates; C. S.=cast steel; F. S.=forged steel; H. S.=hammered steel; J. P.=jaw plates; lb.=pound; M. S.=manganese steel; No.=number; S.=steel; S. C.=steel casting; T.=toggles; T. B.=toggle bearings; W. S.=wrought steel.

Mill No.	Breaker No.	Wearing Part.	Material.	Total Weight. Pounds.		Cost per lb. New. Cents.	Sell per lb. Old. Cents.	Life.		Wear per Ton. Pounds.		Cost per Ton. Cents.	
				New.	Old.			Days.	Tons.	Gross.	Net.	Gross.	Net.
22	1	2 J. P.	W. S.	(a) Bar, 14 Plate, 55	10 41	6¼	0	120 360	12,000 36,000	0.0093 0.0031	0.0027 0.0008	0.058 0.019	0.058 0.019
		2 C. P.	C. I.	60	40	2½	0	(b) 120	12,000	0.005	0.001	0.0125	0.0125
		2 T.	S. C.	100	(c)	8	0	180	18,000	0.005	.....	0.044	0.044
		4 T. B.	S. C.	80	(c)	8	0	60	6,000	0.013	.....	0.106	0.106
26	2	2 J. P.	M. S. H. S. C. S.	470	82	10½ 9½ 6	0.65 0.65 0.65	75 65 35	4,500 3,900 2,100	0.104 0.121 0.224	0.086 0.099 0.185	1.09 1.14 1.34	1.08 1.13 1.31
		2 C. P.	C. S.	114	86	6	0.65	150	9,000	0.013	0.003	0.076	0.070
		T.	None.										
		T. B.	None.										
28	1	2 J. P.	M. S.	250	100	(d) 10	0	365	20,000	0.0125	0.0062	(d) 0.125	(d) 0.125
		2 C. P.	S.	60	40	(d) 10	0	210	12,500	0.0048	0.0016	(d) 0.048	(d) 0.048
		T.	None.										
		T. B.	None.										
28	1	J. P.	F. S.	.....	.....	.....	0	.....	.....	.....	.....	.....	.....
30	2	J. P.	Ch. I.	680	.....	5	.....	24	1,900	0.358	.....	1.790	.....

(a) This has 8 wrought steel bars 1×3×16 inches and a top plate of wrought steel, as shown in Fig. 19. (b) Removed more often from breaking than from wear. (c) Loses little. (d) Plus the freight.

§ 39. THE SCHRANZ BREAKER[167] is of the Dodge type and has a movable jaw with cylindrical surface, as shown in Fig. 20. It approaches and recedes from

the fixed jaw with a combined rolling and sliding motion. Maurice Bellom commends it.

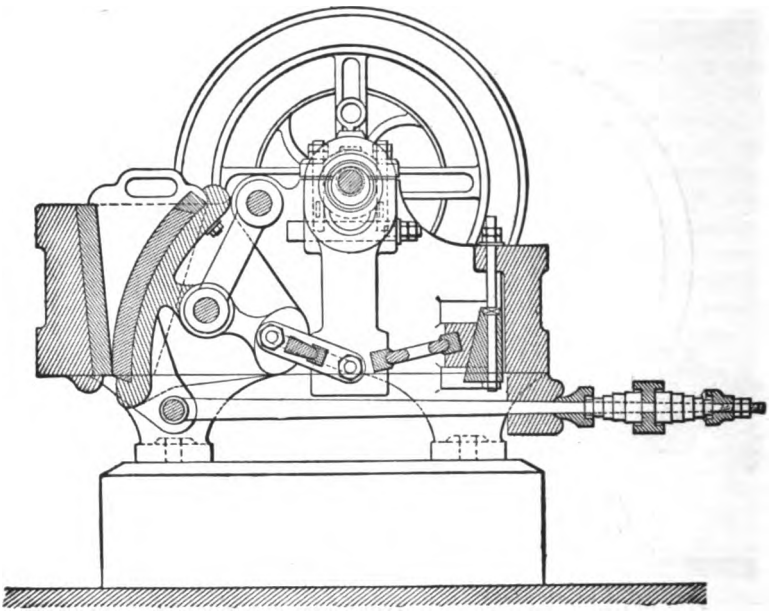

FIG. 20.—SECTION OF THE SCHRANZ BREAKER.

§ 40. STURTEVANT ROLL JAW ROCKER BREAKER AND FINE CRUSHER, made by the Sturtevant Mill Co.—This machine has a large capacity for crushing to a

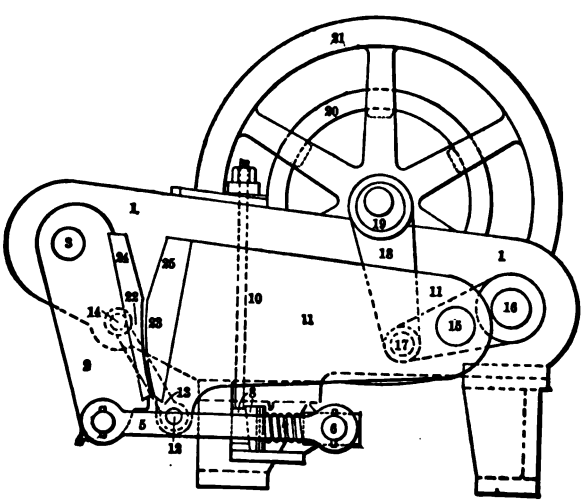

FIG. 21.—STURTEVANT BREAKER.

small size. Its description is as follows: (See Fig. 21). It has a frame 1, with a fixed jaw 2, pivoted at 3, capable of receiving slight movement at 4, through

the link 5, the pin 6, the spring 7, the opposing wedges 8, the shims 9, and the adjusting bolt 10. These connections are provided to furnish two classes of movement: (1) The spring allows the jaws to open in case a hard object gets in. (2) The adjusting bolt, wedges and shims furnish a means of taking up the wear on the jaw.

Motion is conveyed to the movable jaw through the several parts as follows: Power is furnished to the pulley 20, which is bolted to the fly-wheel 21, and drives the pitman 18 by the eccentric 19, causing a vertical oscillation to the lever 17-16, about the center 16. This in turn, through the pin 15, imparts motion to the piece 11, which is supported by the pin 12, the link 13 and the pin 14. The machine is a toggle machine and its two toggles are respectively 16-15 and 23-15. When these are lined up by the rising of 17, it causes the surface 23, which is a cylinder of radius 23-15, to roll from below upward upon the surface 22, which is also a cylinder with radius 22-16, crushing all the particles lying between these two great roll surfaces. In the meantime the two surfaces 24 and 25 approach on the Dodge principle, the greatest movement on the greatest lump, and break the large lumps, the fragments falling into the space between 22-23 as soon as the lower jaws open preparatory to the next fine crushing act.

A Quincy granite cobblestone weighing 2.563 kilos, measuring 4×5×5 inches approximately, was crushed in 6 seconds by a machine with jaws 5×10 inches at the mouth, widening to ¼×20 inches at the throat, and yielded: On 3 mesh,* 0.2%; through 3 on 4 mesh, 2.2%; through 4 on 8 mesh, 32.1%; through 8 on 16 mesh, 24.5%; through 16 on 30 mesh, 14.8%; through 30 on 60 mesh, 11.0%; through 60 on 120 mesh, 7.5%; through 120 mesh, 7.7%; total, 100.0%.

This machine is only just coming on the market so that a full table of sizes and capacities is not to be had. The following data are said to be reliable:

2×4 inches. Laboratory size.

5×10 inches. No longer made. Crushed from 40 to 70 tons per 24 hours from 4-inch cube down to ¼-inch when running at 250 revolutions per minute.

6×16 inches. Crushes from 48 to 72 tons per 24 hours of hard granite to ¼-inch, and half the product will pass through ⅛-inch hole. Speed is 250 revolutions per minute, requiring about 15 horse power. The frame is of cast iron and weighs 6 tons.

6×24 inches. Crushes 96 tons in 24 hours of granite or hard quartz to ¼ inch, running at 225 revolutions per minute. It uses 20 to 25 horse power, and weighs 12 tons.

For the crushing of samples of 20 kilos and less the author has found the smallest size very efficient.

GENERAL REMARKS UPON JAW BREAKERS.

There are two lines of thought along which discussion may be profitable:
(*a*) A comparison of the Blake type with the Dodge type of breakers.
(*b*) The necessity for simplicity of action.

§ 41. (*a*) THE COMPARISON OF THE BLAKE AND DODGE TYPE OF BREAKERS.—Much discussion has taken place over the question: Should the swing jaw be pivoted above or below? As a contribution to the discussion the author submits Tables 15, 16, 17, and 18.

* For actual sizes of these screens, see Table 258.

TABLE 15.—MOVEMENTS ON THE BLAKE BREAKER MADE BY THE FARREL FOUNDRY AND MACHINE CO. (See Fig. 22.)

Number of Breaker.	Mouth size. Inches.	Distance ab=radius. Inches.	Distance ac=radius. Inches.	Movement at c. Inches.	Movement at b. Inches.
4	7 x 10	9	28¾	¼=0.25	.078
6½	9 x 15	10½	35	5/16=0.313	.094
8	10 x 20	11¼	36¼	5/16=0.313	.097
10	13 x 30	11¾	43	5/16=0.313	.085

TABLE 16.—MOVEMENTS ON THE DODGE BREAKER MADE BY THE PARKE & LACY CO. (See Fig. 23.)

Number of Breaker.	Mouth Size. Inches.	Distance ab=radius. Inches.	Distance ac=radius. Inches.	Movement at b. Inches.	Movement at c. Inches.
1	6 x 6	8½	20½	0.389	1
2	7 x 8	6¼	15¾	0.397	1
3	8 x 12	4¾	12	0.247	⅝

TABLE 17.—MOVEMENTS ON THE BLAKE BREAKER MADE BY GATES IRON WORKS.

Mouth Size. Inches.	Movement at Mouth.* Inches.	Movement at Throat.* Inches.
4 x 10	5/16 to ¼	½ to 11/16
7 x 10	5/16 to 5/16	5/16 to 11/16
9 x 15	⅝ to 7/16	⅝ to 7/16

* This breaker has an adjustment for regulating the amount of throw. (See § 28.)

TABLE 18.—MOVEMENTS ON DODGE BREAKER MADE BY GATES IRON WORKS.

Mouth Size. Inches.	Movement at Mouth. Inches.	Movement at Throat. Inches.
4 x 6	½	⅛
6 x 8	½	⅛
8 x 12	5/16	⅛
10 x 15	7/16	⅛

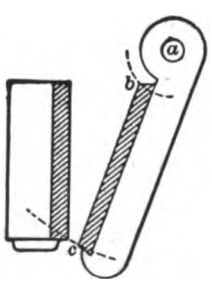

FIG. 22.

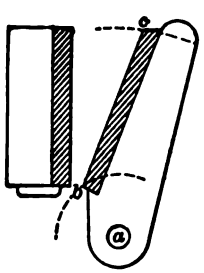

FIG. 23.

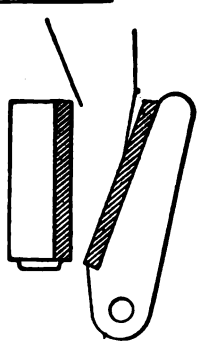

FIG. 24.—HOPPER ON DODGE BREAKER.

Mill 22 gives movement for an 8×16-inch Krom breaker as ½ inch at the mouth and ⅛ inch at the throat.

A 7×10-inch Blake and a 7×8-inch Dodge have in common a gape of 7 inches and for the purpose of computation may both be treated as if they were 7×7-inch breakers, crushing 1 seven-inch cube of sandstone at the mouth and 7 one-inch

cubes of sandstone at the throat. The breaking strength of sandstone being taken as 6,457 pounds per square inch, (see Table 170), the 7-inch cube will require 49×6,457=316,393 pounds, and the 7 one-inch cubes will require 7×6,457=45,199 pounds, respectively to crush them. The movements and speed of the two machines are taken from Tables 5, 12, 15 and 16, and are as follows:

	Blake.	Dodge.
Movement at mouth	0.078 inch.	1 inch.
Movement at throat	0.25 inch.	0.397 inch.
Revolutions per minute	275	300

Then the total movements and the total foot pounds of work per minute for each when treating 1 seven-inch cube at the mouth and 7 one-inch cubes at the throat would be as follows:

		Total Forward Movement per Minute. Feet.	Force to Crush Rock. Pounds.	Foot Pounds of Work per Minute.
Blake.	At the mouth..	0.078×275÷12= 1.79	316,393	566,343
	At the throat...	0.25 ×275÷12= 5.78	45,199	258,990
Dodge	At the mouth..	1. ×300÷12=25.00	316,393	7,909,825
	At the throat...	0.397×300÷12= 9.925	45,199	448,600

From which it appears that the Dodge breaker is working at 17.64 times the rate at the mouth that it is at the throat $\left(\frac{7,909,825}{448,600}=17.64\right)$, while the Blake is working at only 2.19 times the rate at the mouth that it is at the throat, $\left(\frac{566,343}{258,990}=2.19\right)$.

If this line of argument is correct, a machine so unevenly loaded as the Dodge cannot fail to be more expensive in use of power than one as evenly loaded as the Blake. It will doubtless be argued that this statement is not fair, because the Dodge breaks the piece long before it has gone its 1 inch. This is true, but in reply it may be stated that while it was breaking the rock, it was doing work at the above computed rate.

Again, let us assume that our 7-inch cubes actually report at the throat at the rate of 7 one-inch cubes for each crushing act and that these cubes, and no more, are crushed fine enough to drop through when the throat opens, then it will take 49 crushing acts at the throat to clear away what one crushing act does at the mouth. In other words, the capacity at the mouth is 49 times as great as that at the throat. Is it not clear then that the Blake method, which diminishes the exertion at the mouth until several revolutions are often taken to make the first break, and increases it at the throat, is more in harmony with the demands of the operation than the Dodge method which multiplies the already too great capacity of the mouth, and diminishes the already too little capacity at the throat, thereby tending to create the choking effect which is often complained of in running Dodge breakers. In Mill 26 on an 11×15-inch Dodge breaker, running at 214 revolutions per minute, fed with rock between 3 inches and 1 inch in size, set to crush to 1 inch the choking, which had given much trouble, was stopped by putting in a hopper of the form shown in Fig. 24.

This difference in crushing is apparent in listening to the two machines. The Dodge breaker snaps the lumps apart with a report like a pistol shot, while the Blake works more quietly. Another evidence of the momentary high power required by the Dodge is the massive lever arm which was developed from the fact

that the earlier Dodge breakers gave much trouble from the breaking of the lever arm.

The commonly expressed comparison between the two machines is that the Dodge gives a more even product while the Blake has a larger capacity. This however, could hardly be true with machines built with the movements quoted in Tables 15 and 16, but it is true with those quoted in Tables 17 and 18. This common conclusion may be due to the fact that the Dodge breakers are usually set to do a little finer work than the Blake breakers.

There seems little doubt that the Dodge gives a higher percentage of fines than the Blake with the same movement at the throat, especially when run at nearly full capacity. This may be accounted for by the fact that the Dodge is putting in more work at the mouth than is needed to prepare the lumps for the throat. This excess of work is making fines and the machine is acting under the conditions of choked crushing. (See § 97.) The choking or stopping of the Dodge is probably due to this excess of fines, combined with the large movement at the mouth. Each machine has its place, however, and the one to be used will depend upon the special conditions of each case.

§ 42. (*b*) THE NECESSITY FOR SIMPLICITY OF ACTION.—A breaker which mixes two kinds of action in handling its charge, will generally be found to be wasting either power or time by so doing. If, for example, a breaker crushes the coarser lumps in one part of the jaw by pressure and in another by grinding action, either the pressure is better than the grinding or the grinding better than the pressure. Whichever method proves best for that lump, it would be economy of power to treat all the lumps by that method.

A breaker may be built up of two parts which work upon different principles. In such machines the first or upper part prepares the ore for the second or lower part. It will generally be found that the first part has a vastly greater capacity than the second and, in consequence, it is either clogged with ore that it cannot discharge into the second part, wasting power thereby, or it must be underfed, and so wastes time. The Sturtevant roll jaw breaker seems to overcome this objection better than any of the others, as the portion devoted to fine crushing has a very large capacity, probably as large as that of the coarse crushing portion. The widening of the jaws at the throat is made to contribute toward this end.

II.—THE SPINDLE OR GYRATING BREAKERS.

Of these machines there are three types:

(*a*) Those which have the greatest movement on the smallest lump.
(*b*) Those which have equal movement on small and large lumps.
(*c*) Those which have the greatest movement on the largest lump.

(*a*) THE SPINDLE BREAKERS HAVING THE GREATEST MOVEMENT ON THE SMALLEST LUMP.

Examples of this type are: The Gates, the Comet and the McCully breakers.

§ 43. THE GATES BREAKER is manufactured by the Gates Iron Works, in the sizes shown in Table 19. It consists of a bottom plate 1 (see Fig. 25), a bottom shell 2, including the chute for the crushed ore, a top shell 3, supporting the dies or concaves 19, which are of chilled cast iron or steel, a three-armed spider 6, furnishing a bearing for the upper end of the spindle 25. In the very latest design the spider has but two arms. The bearing is cylindrical and the spindle tapers upward at the angle of gyration. These parts are all suitably flanged, fitted and bolted to each other as indicated in the figure. The bottom plate 1 is made to be dropped, for ease of inspection and repair. The spindle 25, with a

shoe or crushing head 18 of chilled cast iron or steel, standing upon the steel step 28 and the octagon step 24 can be raised and lowered by the lighter screw 29

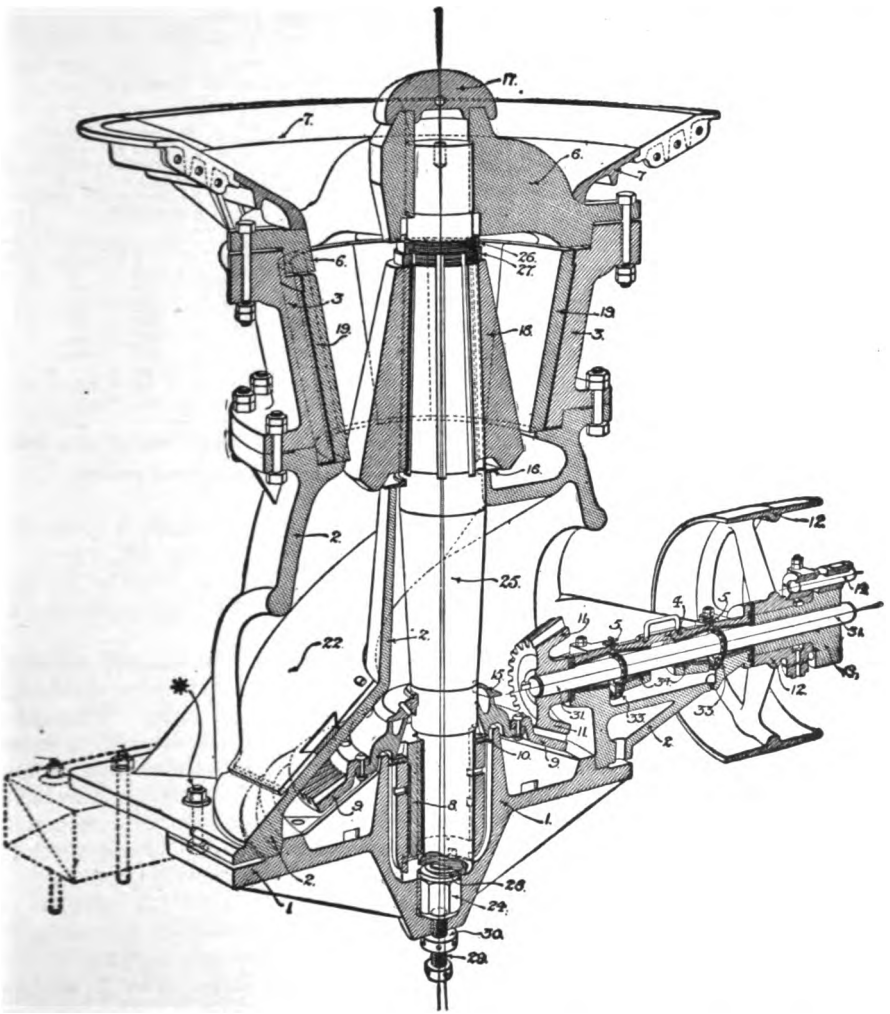

FIG. 25.—SECTIONAL PERSPECTIVE VIEW OF GATES BREAKER.

1. Bottom plate.
2. Bottom shell.
3. Top shell.
4. Bearing cap.
5. Oil cellar cap.
6. Spider.
7. Hopper.
8. Eccentric.
9. Bevel wheel.
10. Wearing ring.
11. Bevel pinion.
12. Pulley.
13. Break-pin hub.
14. Break-pin.
15. Oil bonnet.
16. Dust ring.
17. Dust cap.
18. Head.
19. Concaves.
22. Chilled wearing plates.
24. Octagon step.
25. Spindle.
26. Upper ring nut.
27. Lower ring nut.
28. Steel step.
29. Lighter screw.
30. Lighter screw jam nut.
31. Counter shaft.
33. Oiling chain.

and the jam nut 30. The lower end of this spindle is a journal and finds a bearing in the eccentric hub 8 of the bevel gear 9. The eccentric hub is made of

brass firmly attached to the gear; it is babbitted inside and out on the thick side where all the wear comes. While the interior surface of the hub is an eccentric bearing for the spindle journal, the exterior surface is a journal which is concentric with the gear and finds its bearing in the bottom plate 1.

TABLE 19.—DETAILS OF GATES BREAKER. (Taken from the Catalogue.)

Size.	Dimensions of each receiving opening. (About.) Inches.	Dimensions of three receiving openings combined. (About.) Inches.	Weight of breaker. Pounds.	Capacity per 24 hours in tons of 2,000 pounds passing 2½ inch ring according to character of rock.	Dimensions of driving pulley. Inches.		Revolutions of driving pulley per minute.	Indicated horse-power of engine recommended to drive breaker, elevator and screen.†	Price.
					Diameter.	Face.			
00	2 x 4	2 x 12	350		8	2⅝	700	1 to 1½	$100
0	4 x 10	4 x 30	3,000	48 to 96	16	6	500	4 " 5	375
1	5 x 12*	5 x 36	5,500	96 " 192	20	7	475	8 " 10	580
2	6 x 14	6 x 42	8,000	144 " 288	24	8	450	12 " 15	760
3	7 x 15	7 x 45	14,000	240 " 480	28	10	425	20 " 25	1,200
4	8 x 18	8 x 54	21,000	360 " 720	32	12	400	25 " 30	1,800
5	10 x 20	10 x 60	29,000	600 " 960	36	14	375	30 " 40	2,500
6	11 x 24	11 x 72	40,000	720 " 1,440	40	16	350	40 " 60	3,300
7½	14 x 30	14 x 90	61,000	1,200 " 3,000	44	18	350	75 " 125	5,000
8	18 x 42	18 x 126	90,000	2,400 " 3,600	48	20	350	100 " 150	7,000

* The Nos. 1 to 8 breakers are now built with only two openings in which case the size of each opening is half the combined openings, that is, 5×18, 6×21, 7×22, etc.
† This is a general figure. For fine crushing the capacity will be less and the power greater.

The beveled gear 9 is driven by the bevel pinion 11 on the shaft 31, through the break-pin hub 13 and the cast-iron break-pin 14, by the pulley 12, which has a loose fit on the hub 13. The speed ratio of these gears is usually 2½ to 1. In Mills 60 and 61, it is 2 to 1. Around the pinion 11 is a large opening for oiling and tending the machine.

To prevent dust from injuring the bearings and gears, an oil bonnet 15 and a dust ring 16, both of cast iron, gyrate with the spindle and make dust-tight joints at those two parts. In the bonnet 15 is placed an oil hole. The oil so fed fills the spaces down to the step 28, the rotation of the machine now causes an upward current in the journals of the eccentric 8 and completes the circulation by returning in the vertical tubes shown, of which there are four. A horizontal pipe (not shown) leading in at the level of the step 28 serves as a means of pumping in oil from below and also for draining. The dust cap 17 protects the upper bearing of the spindle from dust. If the oil gets thick or dirty, it may be drained out from the drain pipe, and hot water poured into the oil hole in the bonnet 15. This washes out the oil and any dirt that may have got into the bearings. This in turn is replaced by fresh oil and work proceeds as usual.

The spindle is of forged steel or preferably of wrought iron. The head is of chilled iron, with soft slats cast inside for ease of boring. The spindle is turned on a taper to fit the head, which is driven to a solid, conical fit. The lock-nut rings 26 and 27, are then screwed down to hold the head in place. The head is generally made with fine corrugations while the concaves are smooth; sometimes both are smooth.

There are twelve dies or liners 6 (Fig. 26). The space 1, behind and between them is run with zinc. One of them, 15, is called the key liner and is rectangular in section; behind it in the top shell is a groove 2, for a wedge to drive it inward for removal. After this one is removed the rest can be pried off one at a time. The ring 4 and the wedges 5 are only used when putting in new dies.

When it becomes necessary, owing to the wear, to decrease the size of the opening, the spindle 25 and head 18 are raised by the lighter screw 29, which lifts the octagon step 24 and is held by the jam nut 30. The total amount of raise possible is 2 inches on the Nos. 0 and 1 breakers; 2½ inches on Nos. 2, 3

and 4; 3 inches on Nos. 5 and 6, and 3½ inches on Nos. 7½ and 8. It is customary to have several sets of dies or concaves of different thickness. A new crusher head will be mated with a thin set of dies and when the head and dies wear beyond the limit of the lighter screw 29, the spindle is restored to its starting height, and either a thicker set of dies is put in, or the same set of dies with a narrower key die, are reset with thicker backing. This is repeated until the

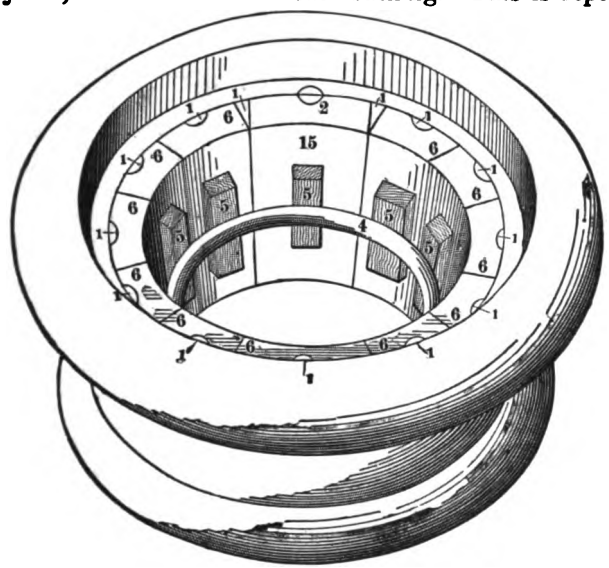

FIG. 26.—DIES OR CONCAVES FOR THE GATES BREAKER.

head is worn out. In the former case, three sets, in the latter, two sets of dies wear out a head.

Since a certain point in the top of the spindle, which is at the fulcrum, has no motion of translation, while a point in the lower end of the spindle gyrates in a circle, it follows that the axis of the spindle describes in its gyrations a very acute cone. Half the apex angle of this cone will be called the angle of gyration, and is shown in Fig. 25. This angle is about 1 : 100 or 0° 34′.

§ 44. *The action of the machine* is as follows: When the bevel wheel 9 revolves, the spindle 25 is free to gyrate or rotate in the eccentric 8. Practically it rotates until ore is fed between the crushing surfaces 18 and 19; it then gyrates. This gyrating motion causes the head 18 to approach and recede from the concaves 19; and, owing to the fact that the spindle 25 acts as a lever with its fulcrum in the spider 6, it will cause a greater movement at the lower end of 18 than at its upper end. This causes, upon the lumps of rock, which are fed into the space between 18 and 19, a crushing action by pressure which has a greater movement upon the smaller lumps than upon the larger. The fulcrum of the Gates is located at the lowest margin of the upper journal of the spindle. This rises and falls inside the box of the spider in adjusting the height of the spindle and head. It follows then that with this adjustment, the angle of gyration shown by the central vertical lines in Fig. 25 (and also the leverage) varies, requiring a little play in the upper and lower journals. The total vertical movement of the spindle is only 3½ inches in the large breakers, and 2 inches in the small, and the journals are fitted for the halfway position, making the play never over 0.02 inch, which is claimed to be no more than is customary on any machinery.

The large lump as broken, falls a little to a fresh bearing to be broken again

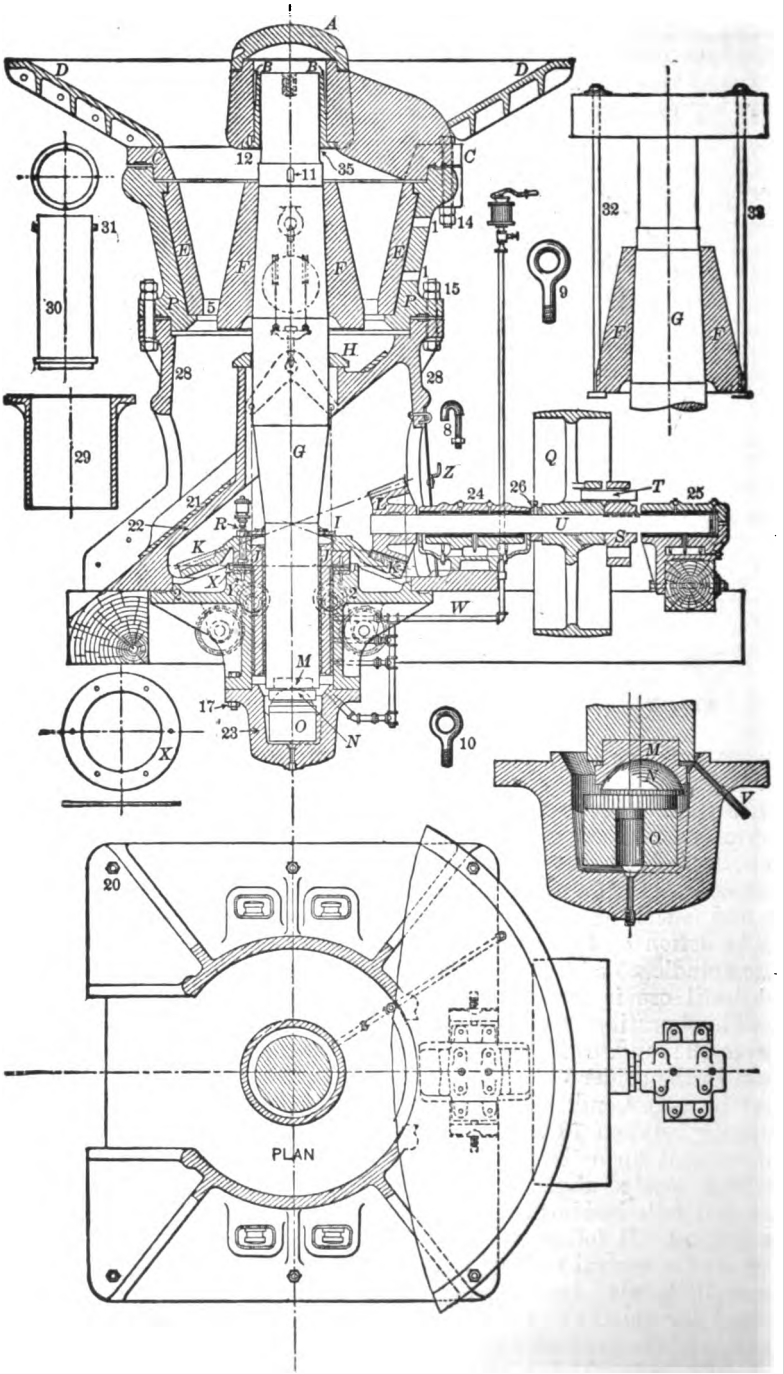

FIG. 27.—SECTION AND PLAN OF COMET BREAKER.

KEY TO FIG. 27.

A. Cap.
B. Oscillating box.
C. Tripod bearing.
D. Hopper.
E. Liners or dies.
F. Crushing head or shoe.
G. Spindle.
H. Dust cover.
I. Dust cover.
J. Hub bolted to bevel wheel.
K. Bevel wheel.
L. Bevel pinion.
M. Steel toe.
N. Loose self-adjusting button.
O. Step.
P. Liner section.
Q. Band wheel.
S. Clutch.
T. Removable breaking pins.
U. Driving shaft.
V. Drain pipe.
W. Oil feed.
X. Friction rings.
Y. Dowel pins for friction rings.
Z. Guard plate.
1. Hole in shell for forcing out liners.
2. Base plate.
5. Throat.
8. Staple for guard plate *Z*.
9. Ring bolt.
10. Ring bolt.
11. Key for head.
14. Bolts.
15. Bolts.
17. Bolts.
20. Foundation bolts.
21. Wearing plate on chute plate.
22. Chute plate.
23. Step support.
24. Cap for bevel pinion journal.
25. Outer pillow block.
26. Collar.
28. Main body or skirt.
29. Sleeve.
30. Mandril.
31. Collar.
32. Draw bolt.
33. Draw bolt.
35. Edge of box.

by the next act of compression, and this is repeated until it is broken fine enough to pass the throat of the machine, that is, between the concaves and the head at the narrowest point. The ore then passes out over the chute 22.

The Gates breaker can be designed for finer crushing with a smaller throw than the ordinary jaw breaker. This is due to the fact that the corrugations on the head are creeping backward all the time in a full fed crusher, and any tendency to pack is broken up by the constantly changing difference in the parts of the head and of the concaves which are opposite one another.

See Tables 25 and 26 for details from mills.

§ 45. THE COMET BREAKER (Fig. 27 and Table 20) is manufactured by Fraser & Chalmers, and is like the Gates in design and action. There are, however, certain differences in the detail of the construction to which reference will now be made. The chute 22 can be removed, giving free access in front to the beveled gears. The entire chute is covered with a boiler iron wearing plate 21, to be removed when worn out. The spindle *G* is turned a true cylinder above to fit the oscillating box *B* and a true cylinder below to gyrate in the hub of the gear *K*. The steel spindle toe *M* is fitted tight into the spindle and is turned concave on its under side to fit the convex side of the loose button *N*, giving perfect self-adjustment between these two parts. The button *N* is flat on the under side, as is the step *O* on its upper side. *N* is therefore, free to slide on *O*. These two surfaces will always wear flat. The bevel wheel *K* has a cast-iron hub, the inside surface of which is eccentric and acts as bearing for the lower end of the spindle. The outside acts as journal for the gear and is therefore concentric with the latter. For any point in the spindle the radius of gyration is $\frac{1}{100}$ of the distance of said point from the fulcrum. Both these surfaces are babbitted on

TABLE 20.—DETAILS OF COMET BREAKER. (Taken from Catalogue.)

Number.	Size of Each Opening.	Capacity per 24 Hours to Size of Macadam.	Height of Breaker.	Outside Dimensions of Frame Sent with Breaker.	Weight of Breaker.	Pulley Diameter and Face.	Diameter of Fly-wheel.	Revolutions of Pulley per Minute.	Horse power Required.
	Inches.	Tons.	Ft. In.	Ft. In. Ft. In.	Pounds	Inches.	Ft. In.		
A	6 x 12	96 to 192	4-10	6 - 1 x 2 - 9	5,500	24 x 8¼	3-0	400	8
B	7 x 14	144 to 240	5-5	6 -10 x 3 - 2	7,500	24 x 10½	3-0	400	12
C	8¼ x 17	336 to 576	6-6	8 - 0 x 4 - 0	14,000	30 x 10½	4-0	400	20
D	10 x 20	480 to 720	7-8	9 - 1 x 4 -10	24,000	42 x 12½	4-6	400	35
E	12 x 24	960 to 1440	9-2	10 -10 x 5 - 8	30,000	40 x 14½	5-0	400	50

the spot; the sleeve 29 serves for babbitting the outer surface, and the mandril 30, for the inner. The velocity ratio of the gears is 2:1 in Mills 26 and 84. Friction rings *X*, three in number, furnish the gear *K* with anti-friction support. The upper and under rings are of bronze and are dowelled to the gear *K* and the base 2 respectively. The middle ring is of steel and is free to revolve. On the dust collar *I*, protecting the eccentric hub *J* is a tight leather joint attached to the spindle *G*. Oil is fed to the main spindle bearing by the pipe *W*, and drained from it previous to lubricating by opening the pipe *V*. By filling the pipe *W* to the level of the tops of the bearings, perfect lubrication of the inside and outside bearings, as well as the friction rings, will be obtained. For larger machines one pint of oil four times a day will be needed; in starting a new machine, the oil should be drained every two days and the support 23 taken off and cleaned. This oil can be used again on other bearings. At *H* is another dust collar similar to *I*, but protecting the gear teeth from ore.

The clutch *S* and cast-iron clutch toes *T*, serve to put on and take off power and also as a breaking part, so that if a hammer head is fed to a breaker, the machine stops while the fly-wheel and pulley go on revolving.

The oscillating box *B* is turned true cylinder inside but is tapered upward on the outside at the exact angle of gyration of the spindle (1 in 100). The lower edge of this box 35 is the fulcrum, the position of which is constant. The set screw 12 prevents it from rotating. When the spindle is raised for adjustment, the box does not rise with it, thus keeping a constant leverage and a uniform alignment between upper and lower bearings and the spindle. In the figure the spindle is shown at its highest position.

A guard plate *Z* is put in to protect the gears on the rear side from harm. This is kept locked and opened only for oiling or repairs. The gears are of steel cast as smoothly as possible and not planed. The head *F* fits the spindle on a tapered seat and is held by a key 11. It is removed by the draw bolts 32 and 33.

The dies or concaves are put in place after cleaning, drying, warming them in cold weather, and stopping the cracks; they are then backed by running in molten

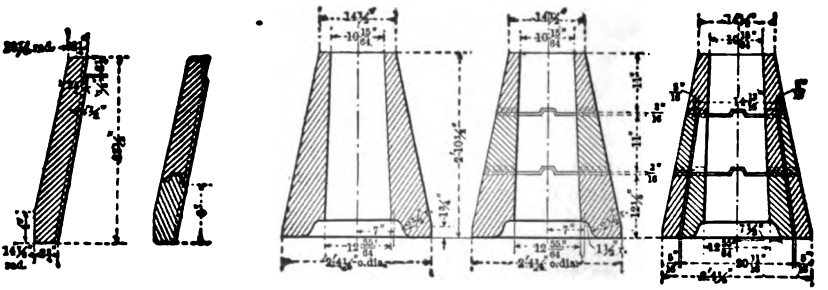

FIG. 28. SINGLE PIECE LINER FOR SIZE E. FIG. 29. SECTIONAL LINER. FIG. 30. SINGLE PIECE HEAD FOR SIZE E. FIG. 31. SECTIONAL (3-PIECE) HEAD. FIG. 32. SECTIONAL (5-PIECE) HEAD.

zinc. The warming helps the zinc to flow. Each liner is made in one piece (Fig. 28), or in two pieces (Fig. 29) on account of the greater wear at the lower end. In the latter form the upper section lasts twice as long as the lower section.

The head is also made in several forms. The ordinary is all in one piece, as shown in Fig. 30. Later, composite forms, jointed by zinc and providing for the greater wear at the tips, are shown in Figs. 31 and 32. The lower part will

perhaps wear twice as fast, and the upper part half as fast as the middle part. This plan sends less metal to the scrap heap than when the head is in one piece. 9 and 10 (Fig. 27) are ring bolts used for lifting out the various parts; 8 is the staple for fastening the plate *Z*.

§ 46. *Adjustment for Wear.—The Amount of Throw.*—In the earlier forms, the wear of the head and liners is taken up by raising the spindle by the introductions of buttons under the step piece *O*. When this has reached its limit, the liners or head have to be changed as in the Gates breaker, and the spindle lowered again to its starting point. The button adjustment was a clumsy arrangement, and in the later form (see Fig. 33) there is a ram *K* provided with a steel toe *d'*, on which stands the hemispherical button *g* and the spindle *G*. At the lower

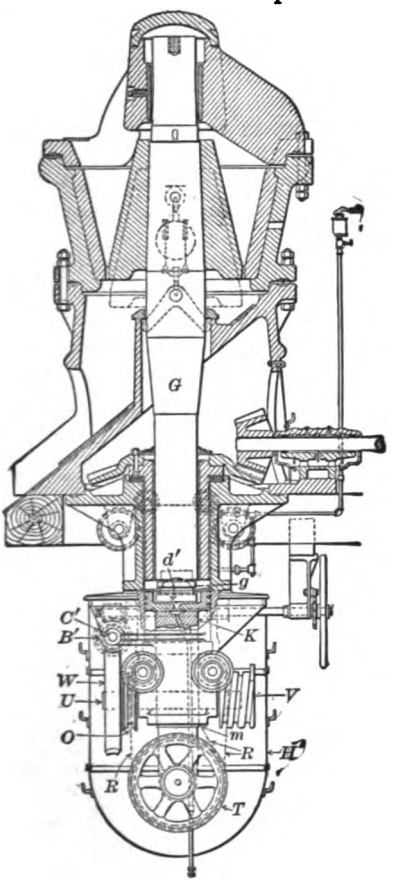

FIG. 33.—COMET BREAKER WITH NEW CHAIN ADJUSTMENT.

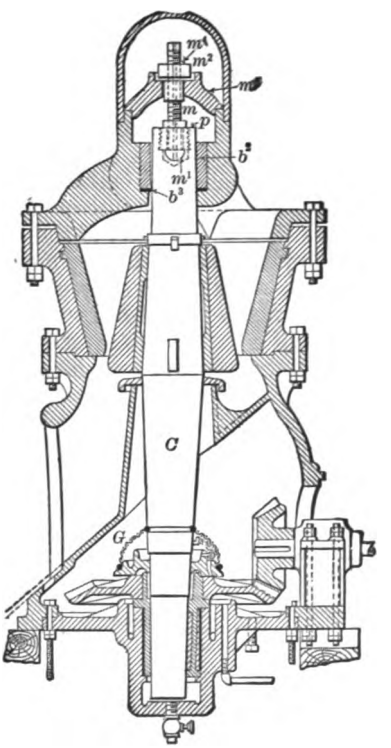

FIG. 34.—SECTION OF THE McCULLY BREAKER.

end of the ram are two supporting sheaves *T*, and running through a slot in the ram is the drum shaft *U*. A crank shaft *C'* turns the screw *B'* of the worm gear and by it the gear *W* and the grooved drum *V*, upon which the chain *R* winds. This chain passes under one sheave *T*, over the loose sheave *O*, under the other sheave *T* and up to be attached to the frame at *m*. In the largest breaker *E*, the spindle can be lifted by this mechanism 9 inches vertically. The whole is enclosed in the casing *H'*.

Some of the dimensions and the amount of movement of the Comet breaker are given in Table 21.

TABLE 21.—DIMENSIONS OF COMET BREAKER.

Size.	Vertical Distance from Fulcrum to Top of Liners or Concaves. Inches.	Vertical Distance from Fulcrum to Bottom of Liners or Concaves. Inches.	Vertical Distance from Fulcrum to Center of Eccentric Journal. Inches.	Total Movement, or Throw.		
				At Top of Liners. Inches.	At Bottom of Liners. Inches.	At Center of Eccentric Journ'l. Inches.
A	8	18	56	.16	.36	1.12
B	10	24	67	.20	.48	1.34
C	10½	27	76	.21	.54	1.52
D	13	33	92	.26	.66	1.84
E	14	38	108	.28	.76	2.16

See Tables 25 and 26 for details of Comet breakers in the mills.

§ 47. THE MCCULLY GYRATING BREAKER (Table 22 and Fig. 34) is manufactured by R. McCully. This breaker is in principle like the Gates and Comet, but it has certain differences for which advantage is claimed. They are as follows:

The spindle C is not supported on a step below but is suspended from the tripod m^3 through the adjusting nut m^2, the screw m and the ball and socket joint m^1p, consisting of a spherical ball m^1 and a screw plug p, with a hemispherical socket on the under side. The nut m^2 is held at any particular thread by a key m^4 to suit the raising or lowering of the crushing head. The top journal of the spindle is turned cylindrical while the inside of the sleeve b^2 is conical to suit the angle of gyration. The fulcrum is at b^3. The effect of this combination is that the weight of spindle and head are carried upon the tripod with greatly reduced friction, while in the Gates and Comet breakers this weight causes the sliding friction of the step below. The machine has a side manhole which enables it to be safely lubricated while running. The bearing of the large gear can be removed for repairs by lowering the bottom by bolts without taking down the machine. A flexible canvas hood G excludes the dust from the bearings below.

TABLE 22.—SIZES OF MCCULLY BREAKER. (From Catalogue.)

Size.	Weight of breaker. Pounds.	Size of each feed opening in breaker. Inches.	Size of combined feed openings. Inches.	Capacity per 24 hours in tons of 2,000 pounds to macadam or ballast size (2½ inches).	Dimensions of driving pulleys.		Revolutions of driving pulley per minute. Gears reduce this ⅓.	Size of engine in horse power for breaker, elevator and screen.
					Diameter Inches.	Face. Inches.		
1	5,500	5 x 12	5 x 36	108 to 204	20	4	500	5 to 6
2	7,900	6 x 14	6 x 42	168 " 288	24	5	475	8 " 10
3	14,000	7 x 15	7 x 45	260 " 480	28	6	450	12 " 15
4	21,000	8 x 18	8 x 54	480 " 720	32	8	425	15 " 20
5	27,500	10 x 20	10 x 60	720 " 960	36	10	400	18 " 22
6	42,000	11 x 24	11 x 72	960 " 1,440	40	12	375	25 " 30
7	64,000	14½ x 30	14½ x 90	1,440 " 3,000	44	14	375	40 " 60
8	91,000	18 x 42	18 x 126	2,400 " 3,600	48	16	375	60 " 75
9	100,000	20 x 44	20 x 132	2,880 " 4,200	52	18	370	80 " 110

An older form of the McCully breaker has no ball and socket joints but simply has two large lock nuts upon the threaded upper end of the spindle. The lower lock nut rests directly upon the sleeve b^2 (Fig. 34). This has the disadvantage that the sleeve bears only at one point at a time and there is more or less of an up and down or seesaw motion of the head.

§ 48. COMPARISON OF THE GATES AND MCCULLY BREAKERS.—A comparative test made by the Gates Iron Works on the regular Gates breaker, a Gates breaker supplied with a suspended shaft so made as to obviate any seesaw motion, and an old style McCully breaker, gave the results shown in Table 23. The conditions with regard to speed, amount of throw and leverage were the same, and the same crushing head was used for all three tests.

TABLE 23.—COMPARATIVE TESTS OF SPINDLE BREAKERS.

Style of Breaker.	Test No.	Opening at Throat. Inches.	Rock Used. Pounds.	Time Consumed. Minutes.	Net Power Used. Ampères.	Relative Work Used.
Regular Gates, No. 0	3 and 4	0.17	500	9.92	10.64	108.5
Gates No. 0, with suspended shaft	5 and 6	0.17	500	10.33	9.87	100.0
Old style McCully	7, 8 and 9	0.17	500	13.51	8.77	116.0

The rock used was hard, close-grained granite, all between 3 and 1½ inches diameter, and had a compressive strength of about 30,000 pounds per square inch. The "Net Power Used" is obtained by subtracting the power used in running empty from the total used in crushing. The "Relative Work Used in Crushing" expresses the ratio of the products of power multiplied by time. Sizing tests of the products are given in Table 24.

TABLE 24.—SIZING TESTS OF PRODUCTS FROM SPINDLE BREAKERS.

	Tests Nos. 3 and 4.		Tests Nos. 5 and 6.		Tests Nos. 7, 8 and 9.	
	Pounds.	Per Cent.	Pounds.	Per Cent.	Pounds.	Per Cent.
Over 1 inch	1.5	0.30	1.5	0.30	0.58	0.12
Through 1 on ¾-inch	50.5	10.15	59.5	11.94	23.50	4.69
Through ¾ on ½-inch	224.0	45.03	218.5	43.83	198.80	39.70
Through ½ on ¼-inch	99.5	20.00	99.0	19.86	126.70	25.30
Through ¼ on ⅛-inch	122.0	24.53	120.0	24.07	151.20	30.18
Total	497.5	100.01	498.5	100.00	500.7	99.99

This table shows that the extra work done by the old McCully breaker as shown in Table 23, has made its appearance in a finer crushed product.

(b) SPINDLE BREAKERS WITH EQUAL MOVEMENT ON LARGE AND SMALL LUMPS.

§ 49. RUTTER BREAKER.—S. R. Krom has in his catalogue a figure called the improved Rutter breaker. It places the crusher head directly upon a long eccentric running its whole length. The spindle, therefore, revolves and the crusher head gyrates upon the spindle. This is the earliest form from which the modern spindle breakers have been developed.*

(c) SPINDLE BREAKERS WHICH HAVE THE GREATEST MOVEMENT UPON THE LARGEST LUMP.

§ 50. THE LOWRY NATIONAL BREAKER, the rights of which are now owned by the Gates Iron Works, represents this class. The spindle has a pivot consisting of a ball and socket bearing placed just below the crusher head. Breaker No. 4 in Mill 89 is of this pattern. (See Table 25.)

* Rutter's Ore Mill, patented March 23, 1869. Brown's Improved Mill, March 26, 1878; reissued September 7.

§ 51. Comparison of Spindle Breakers of Class (*a*) with Those of Class (*c*).—The remarks made in comparing the Blake and Dodge types of breakers, (§ 41), apply here with equal force.

§ 52. Mill Data on Spindle Breakers.—Table 25 gives the details of the spindle breakers in the mills visited by the author. These machines are all fed dry. It is noticeable that they are all of them machines of large capacity, but are run much below their limit. In the mills using Comet breakers the new worm-gear adjustment is evidently becoming a favorite means of adjustment for taking up wear, the old Comet adjustment with buttons being used only on machines of earlier date.

TABLE 25.—DETAILS OF SPINDLE BREAKERS.

Abbreviations.—Br.=breaker; C.=comet; Cap.=capacity; Est.=estimated; G.=Gates; griz.=grizzly; H. P.=horse power; in.=inches; L.=Lowry; Max.=maximum; No.=number.

Mill No.	Breaker No.	Pattern.	No. Used.	Size.	Revolutions per Minute. Of Pulley.	Revolutions per Minute. Of Head.	Size of Feed.	Size Crush'd to. Inches.	Actual Cap. per Br. per 24 Hours. Tons.	Est. Max. Cap. per 24 Hours. (*a*) Tons.	Repairs besides wearing parts.	Est. H. P. Required.	Head Raised by
26	1	C.	1	D	320	160	Mine ore	2½	200	(*b*) 960	(*c*)	(*d*) 30	Worm gear.
30	1	G.	1	4	340	170	" over 1½-in. griz.	2½	250	960	(*e*)	20-25	.....
34	1	G.	2	3	425	212	" over 1½ in. "	1½	110	.....	.....	.....	.....
35	1	G.	1	3	500	250	" over 1-in. "	1	200	480	(*f*)	20	.....
54	1	C.	1	D	.....	.....	" over 1½-in. "	2	75	.....	.....	.....	.....
60	1	G.	1	3	.....	.....	"	2	17	.....	.....	12	Screw to 6 in.
61	1	G.	1	3	425	212	" over ½-in. "	1	125	380	(*g*)	.....	Screw to 6 in.
66	1	G.	3	6	.....	.....	"	1½	200	.....	.....	.....	Screw to 6 in.
83	1	C.	2	D	.....	.....	"	1 to 1½	60	.....	.....	.....	Shims up to 6 in.
84	1	C.	1	D	400	200	" over 1½-in. griz.	3	100	.....	(*h*)	40	Worm gear.
89	4	L.	1		.....	.....	(*i*)	¾	.....	.....	.....	.....	.....

(*a*) These are estimates by the mill managers; for capacities quoted by manufacturers, see Tables 19 and 20. (*b*) This can probably crush 1,440 tons in 24 hours. (*c*) Repairs, oil and other incidentals, $200 per year. (*d*) This is the result of actual measurement. (*e*) None except occasional babbitting. (*f*) Babbitt eccentric every 6 months. (*g*) Bevel gear and pinion gear. (*h*) Babbitting bearings. (*i*) Through No. 3 breaker on No. 1 trommel, 1 in.

Table 26 shows the wear and cost of parts in the spindle breakers and is computed in the same manner as described under the Blake breaker, § 33.

TABLE 26.—WEAR FOR SPINDLE BREAKERS.

Abbreviations.—1st G. B.=1st grade babbitt; B. P.=breaking pin; B. W. I.=best white iron; Ch. I.=chilled iron; C. H. S.=case hardened steel; C. I.=cast iron; E.=each; H.=Head; L.=Liners; M. G. B.=main gear babbitt; P.=pivots.

Mill No.	Breaker No.	Wearing part.	Material.	Total weight. Pounds. New.	Total weight. Pounds. Old.	Cost per pound. New. Cents.	Sell per pound. Old. Cents.	Life. Days.	Life. Tons.	Wear per ton. Pounds. Gross.	Wear per ton. Pounds. Net.	Cost per ton. Cents. Gross.	Cost per ton. Cents. Net.
26	1	H.	Ch. I.	3,300	2,700	6	0.65	350	50,400	0.0655	0.0119	0.381	0.346
		L.	"	1,440 / 1,760	1,340	6	0.65	120 / 150	13,000 / 24,000	0.111 / 0.073	0.0077 / 0.0175	0.665 / 0.440	0.597 / 0.408
		B. P.	C. I.	(*a*)	.....	.....	.....	.....	.....	.....	.....	.....	.....
30	1	H.	Ch. I.	.....	.....	(*b*)	½	245	90,000	.....	.....	.....	.....
		L.	"	90 E.	70 E.	.....	½	245	90,000	.....	.....	.....	.....
35	1	H.	"	800	600	5⅝	.....	140	42,000	0.019	0.005	0.107	.....
		12 L.	"	600	400	5	.....	235	67,200	0.0089	0.0080	0.045	.....
		B. P.	.....	(*c*)	.....	.....	.....	15	.....	.....	.....	.....	.....
61	1	H.	Ch. I.	880	500	7	1¾	102	12,750	0.069	0.0398	0.49	0.41
		L.	"	763	500	7	1¾	90	11,250	0.068	0.0234	0.475	0.397
		P.	C. H. S.	.....	.....	.....	.....	(*d*)	.....	.....	.....	.....	.....
		M. G. B.	1st G. B.	.....	.....	.....	.....	(*d*)	.....	.....	.....	.....	.....
66	1	H.	Ch. I.	.....	.....	.....	.....	150	.....	.....	.....	.....	.....
		L.	"	.....	.....	.....	.....	.....	.....	.....	.....	.....	.....
83	1	H.	B. W. I.	1,800	.....	7	.....	180	10,800	0.167	.....	1.167	.....
		L.	"	1,375	.....	7	.....	180	10,800	0.127	.....	0.891	.....
84	1	H.	Ch. I.	1,000	700	4	¾	180	16,000	0.0625	0.0187	0.250	0.217
		L.	"	2,000	1,400	4	¾	180	16,000	0.125	0.0375	0.500	0.434
		P.	C. I.	.....	.....	.....	.....	(*d*)	.....	.....	.....	.....	.....
		M. G. B.	.....	.....	.....	.....	.....	365	33,000	.....	.....	.....	.....
		B. P.	C. I.	6	.....	.....	.....	.....	.....	.....	.....	.....	.....

(*a*) 2 × 2 × 10 inches. (*b*) $80.00 per set. (*c*) 1⅛ × 7 inches. (*d*) Long time.

§ 53. *Routine of Managing Heads and Concaves on Spindle Breakers.*—In Mill 66, three sets of concaves of varying thickness are used. A new head is first mounted and with it the thinnest set of concaves, and the screw adjustment is used to regulate size until the head is raised to its highest, then the process is repeated with a medium set of concaves, and finally with a thick set. At the end of the third period the head is worn out and the routine is gone over again.

In Mill 83, two thicknesses of concaves only are used during the cycle and the spindle is raised by six buttons, each 1 inch thick, one at a time.

In Mill 26 a Comet D breaker wore its parts as indicated in Table 27. The cost of removing old concaves and putting in new ones was about $24.50, including zinc for backing. The cost for changing a head was about the same.

TABLE 27.—SHOWING WEAR OF PARTS IN MILL 26.

Date.	Concaves.		Head. Weight. Pounds.	Chilled iron made by	Cost per pound. Cents.	Life.	
	Thickness. Inches.	Weight. Pounds.				Days.	Tons.
May 20, 1895....	2½	1,440	.....	Fraser & Chalmers.	.....	109	12,874
May 20, 1895....	.....	.....	3,300	" "	.....	307	38,369
Sept. 15, 1895...	2¼	1,440	.....	Lake Superior Iron Works.	6	112	13,247
Jan. 5, 1896.....	3½	1,760	.....	" " " "	6	34	4,154
Feb. 8, 1896.....	3½	1,760	.....	" " " "	6	148	24,209
April 1, 1896....	.....	.....	3,300	" " " "	6	.....	.....
July 5, 1896....	3½	1,760	.....	Local foundry.	5¼	.....	.....

General Consideration about Breakers and Breaking.

§ 54. Quality of Crushing by Breakers.—Two sizing tests are given as follows:

In Mill 25, breaker No. 1, a 9×15-inch Blake, set to crush run of mine containing dolomite with disseminated galena 1½ inches in size, yielded the following sizes: On 1¼ inches, 51.2%; through 1¼ on ⅞ inch, 16.7%; through ⅞ on ⅝ inch, 7.3%; through ⅝ on ⅜ inch, 7.9%; through ⅜ on ¼ inch, 6.2%; through ¼ inch on 4 mm., 4.8%; through 4 mm. on 1 mm., 4.4%; through 1 mm. on ¼ mm., 0.4%; through ¼ mm., 1.1%; total, 100.00%.

K. Von Reytt[162] gives the following sizes as produced by a jaw breaker running at 230 revolutions and crushing lumps of Przibram ore all about 64 mm. size. Through 64 on 32 mm., 22.35%; through 32 on 22 mm., 24.12%; through 22 on 16 mm., 18.85%; through 16 on 12 mm., 4.22%; through 12 on 8 mm., 10.15%; through 8 on 6 mm., 5.03%; through 6 on 4 mm., 1.40%; through 4 on 3 mm., 1.40%; through 3 on 2 mm., 1.91%; through 2 on 1 mm., 3.60%; through 1 on ½ mm., 1.70%; through ½ on ⅓ mm., 1.94%; through ⅓ on $\frac{1}{10}$ mm., 1.23%; through $\frac{1}{10}$ mm., 2.10%; total, 100.00%.

For other sizing tests see § 48 and § 63.

Too much importance should not be given to the foregoing figures, as the percentages vary much according to circumstances; for example, whether the mine fines are sifted out or not, whether the ore is tough and brittle, or soft and granular, whether the machine is set to crush small or large, whether it is of Blake or Dodge type, whether the crushing surfaces are sharply corrugated or smooth.

As an example of this last condition we have Mill 13, where a Blake breaker (see Table 9) is used to crush pyrite for kiln roasting. New jaws with sharp corrugations make approximately 14% of fines in crushing rock to pass through a hole ½ inch in diameter, while old round and smooth plates make 30% of fines. Hence the very short life allowed for plates in that mill.

With the Gates breaker it has been found possible to do "choke" crushing (see § 97), and so crush the material finer than the opening at the throat would indicate. As a specific example, a No. 4 Gates breaker, set at 1½ inches, sent its product to a trommel with ¾-inch round holes and the oversize which was large in amount was returned and mixed with the large lumps of feed. This mixing of the large and small lumps is essential to produce the "choke" crushing. The capacity of this system is 144 to 168 tons of granite in 24 hours. The product contains less fines and fewer elongated or flattish lumps than where the breaker is set to crush to ¾ inch in the ordinary way.

§ 55. MATERIAL FOR WEARING PARTS.—A glance at Tables 10, 14 and 26 shows that chilled iron is by far the most common metal used. The detailed statement is as follows: Spindle breakers—all use chilled iron. Dodge breakers—3 use steel jaws and cheeks, 2 use chilled iron jaws and cheeks, 2 use steel jaws and iron cheeks, 3 use steel jaws (cheeks not given). Blake breakers—12 use steel jaws and cheeks, 42 use iron jaws and cheeks, 9 use steel jaws and iron cheeks, 4 use steel jaws (cheeks not stated), 48 use iron jaws (cheeks not stated).

Mills 41 and 64, in Table 10 (Blake breakers) and Mill 26, in Table 14 (Dodge breakers), show the superiority of manganese steel over chrome steel, hammered steel, cast steel and chilled iron. Mill 40 reports the same, without furnishing complete figures. Mill 62, in Table 10 (Blake breakers), shows more favorably for chilled iron as against chrome and manganese steels. The ore is very hard to crush.

Averaging up the figures of gross cost of jaw plates from Table 10, we get the averages given in Table 28.

TABLE 28.—COMPARATIVE WEAR OF METALS FOR JAW PLATES OF BLAKE BREAKERS.

	Average of	Gross cost of metal per ton.
		Cents.
Chrome steel	6	1.483 *
Cast iron (probably chilled)	2	0.354
Manganese steel	5	0.963 †
White iron	1	1.53
Chilled iron	10	0.356

* This figure is unfavorably influenced by one very high figure (Mill 62) which, when omitted, reduces the average to 0.879 cents.
† This contains one very high figure (Mill 62) which if left out would reduce the average to 0.464 cents.

The figures in Table 28 do not quite fairly represent the relative costs, for the following reasons: Mills crushing soft ores, as the Missouri limestones, are all given chilled cast-iron jaw plates, while mills with a hard, tough ore to treat use one of the steels. If the applications were reversed, it is probable that costs given for the steels would be greatly reduced, and that for chilled cast iron proportionately increased.

For jaw breakers, Gates Iron Works recommend manganese, chrome or Johnson steel for hard work; otherwise, chilled iron. Fraser & Chalmers recommend manganese and chrome steel for longest life and cheap repairs. T. A. Blake says that everything considered, chilled cast iron is most satisfactory and economical, giving better results than cast steel. For fine multiple jaw breakers, he uses best tool steel; for coarse multiple jaw breakers, chilled iron. For large breakers, Blake recommends corrugated jaws; for small, smooth or plane jaws.

For the qualities of the various metals, the reader is referred to the discussion given under rolls (§ 79), bearing in mind that the tendency of chilled iron to become pitted when used for roll shells does not affect it adversely for the wearing parts of breakers and that the quality of manganese steel, that it does not

fully return to its form after expansion by heat and work, will be no disadvantage in jaw breakers, but may cause difficulty in spindle breakers.

The higher priced metals have longer life than chilled cast iron and, in consequence, the charge against changing the parts is reduced, as it occurs less often.

§ 56. Use of Water.—Water is sometimes fed to the rock breaker with the ore. The custom, by mills, is as follows:

With water—16 Blake, 0 Dodge, 0 spindle.

Without water—39 Blake, 6 Dodge, 11 spindle.

The addition of water is made under two considerations: First, it is sometimes necessary to add the water to the system to move the ore in the chutes, and if so, why not feed it in the breaker? Secondly, crushing is hastened and the production of slimes is lessened by adding water to get the fines out of the way, particularly when the ores are soft, muddy or talcose. For example, in Mill 87 the Blake has water connections which are used only when talcose or soft ore is fed. Water prevents packing of a breaker from clayey ores and for this reason a stream of water from a 1-inch pipe is kept running into the breakers which treat soft ore in Missouri. It is even said that pouring a cup of water into a breaker clogged with clayey ore will often start it. Water may also be used to lay dust in case of need.

§ 57. Large versus Small Breakers.—The tables show that, as a rule, the breakers are run far below their capacity and for a few hours only out of the twenty-four.

The advantages of a large breaker are that it saves cost of sledging; that it will do its day's work in a short time and leave the attendant free for other work, thus saving labor. The disadvantage is, that it costs more at the start and needs a larger engine, but it does not on that account consume more power per ton.

§ 58. Essentials of a Good Breaker.—It should be strong enough to resist the stresses and heavy enough to work steadily. It should be of ample size to take the largest lump. Its action should be simple and its wearing parts accessible and easily removed. There must be no possibility of contact of oil with the ore. The jaw breakers need heavy fly-wheels. All breakers need a cheap breaking point. Sahlin[46] for jaw breakers recommends this to be the bolts which hold the cap of the pitman, whereas in the spindle breakers, it is a special breaking pin connecting the driving pulley and fly-wheel with the driving shaft of the machine.

§ 59. Cost of Crushing.—Estimates for the cost of crushing have been prepared for different sizes of both jaw and spindle breakers, and are shown in Tables 29 and 30. The basis for the estimates given on the jaw breakers is as follows:

1. *Sizes, capacities, powers and original costs* are taken from the catalogue figures given in Table 5.

2. *Oil,* costing 35 cents per gallon* is estimated to be used at the rate of 1 quart per 24 hours, on a 13×30-inch breaker, crushing 540 tons in 24 hours. The cost per ton is $35\times\frac{1}{4}\div540=0.016$ cents. The cost per ton for a 4×10-inch breaker, estimated to use $\frac{1}{2}$ pint per 24 hours, crushing 84 tons is $35\times\frac{1}{16}\div84=0.026$ cents. The average of these two figures is 0.021 cents.

3. *Interest and Depreciation* at 10% per annum.—For a 4×10-inch breaker this would be $27.50 per year. On a basis of 308 operating days, 84 tons being crushed per day the cost per ton would be $\frac{\$27.50}{308\times84}=0.106$ cents. Other sizes are calculated in the same way.

* Taken from catalogue of Gates Iron works.

4. *Power* is estimated to cost $40 per horse power per year of 308 days,* or $0.1298 per day. For a 4×10-inch breaker, using 5 horse power and crushing 84 tons per day, the cost per ton would be $\frac{\$0.1298\times5}{84}=0.773$ cents. Other sizes are figured in like manner.

5. *Labor.*—It is assumed that the breaker is fed by a sloping chute and can therefore be fed by one man at a cost of $2 per 12-hour shift, or $4 per 24 hours. The cost per ton for a 4×10-inch breaker would be $\frac{\$4}{84}=4.762$ cents.

6. *Wear* is estimated at 0.815 cents per ton, which is the average of the gross cost per ton from 18 mills in Tables 10 and 14 (Blake and Dodge breakers).

7. *Repairs other than Wearing Parts.*—The maximum figure given is that of $155 per year for Mill 24 (Table 9). This breaker treats 109 tons per day or 33,572 tons per year of 308 days, making the cost per ton $\frac{\$155}{33,572}$ or 0.462 cents.

TABLE 29.—ESTIMATED COST OF CRUSHING BY JAW BREAKER.

Size of mouth in inches	4x10	7x10	9x15	10x20	12x20
Tons crushed in 24 hours	84	120	192	300	540
Horse power	5	8	12	20	30
Cost of breaker	$375	$500	$750	$1,050	$2,250
Cost in cents per ton for oil	0.021	0.021	0.021	0.021	0.021
" " " interest and depreciation	0.106	0.135	0.127	0.114	0.135
" " " power	0.773	0.865	0.811	0.865	0.721
" " " labor	4.762	3.333	2.083	1.333	0.741
" " " wear	0.815	0.815	0.815	0.815	0.815
" " " repairs	0.462	0.462	0.462	0.462	0.462
Total cost in cents per ton	6.939	5.631	4.319	3.610	2.895

The basis for the estimates given on spindle breakers is as follows:

1. *Sizes, capacities* and *costs* are taken from catalogue figures of Gates breaker, given in Table 19.

2. *Power* is estimated by Gates rule that it takes 1 horse power to crush 1 ton per hour to 2½ inches in size.

3. *Oil* is estimated at 0.021 cents per ton, as with jaw breakers.

4. *Interest, power* and *labor* are calculated as in the other case.

5. *Wear* is estimated at 0.971 cents per ton, which is the average of the gross cost per ton from 5 mills in Table 26. Since so few quotations are available the figures on both Gates and Comet breakers have been taken, although the latter average a little higher.

6. *Repairs other than Wearing Parts.*—The maximum figure given in Table 25 is $200 per year, including oil, for Mill 26. Deducting $25 for oil, we have $175 for repairs on a breaker which treated 28,363 tons of ore from January 5 to July 5, 1896, as shown in Table 27. The cost per ton is $\frac{\$175}{28,363\times2}=0.308$ cents.

TABLE 30.—ESTIMATED COST OF CRUSHING BY SPINDLE BREAKERS.

Number of breaker	0	2	4	6	8
Size of mouth in inches	4x20	6x42	8x54	11x72	18x126
Tons crushed in 24 hours	72	216	540	1,080	3,000
Horse power	3	9	22	45	125
Cost of breaker	$375	$760	$1,800	$3,800	$7,000
Cost in cents per ton for oil	0.021	0.021	0.021	0.021	0.021
" " " interest and depreciation	0.169	0.114	0.108	0.099	0.076
" " " power	0.541	0.541	0.541	0.541	0.541
" " " labor	5.556	1.852	0.741	0.370	0.122
" " " wear	0.971	0.971	0.971	0.971	0.971
" " " repairs	0.308	0.308	0.308	0.308	0.308
Total cost in cents per ton	7.566	3.807	2.678	2.310	2.060

* Kent's "Mech. Eng. Pocketbook," p. 790.

The two tables are not intended to cover all cases of crushing—in fact, such a thing is impossible—but rather to show the way the calculation of the various items should be made under various conditions. For example, these figures are based upon one man to attend the breaker, while it is not uncommon to require two or even three men. Thus, at Mill 24 a 9×15-inch Blake requires four feeders in 24 hours to crush 109 tons of ore. The men are paid $1.30 each, or a total of $5.20, which is equivalent to 4.77 cents per ton. Substituting this figure for the 2.083 cents given in Table 29 we get 7.006 cents as the estimated total cost of crushing in that mill.

These tables are also based upon 24 hours per day, whereas the usual custom is to run 10 hours or less per day. This change, however, would not greatly affect the computations. It should be borne in mind that these figures cover merely the act of feeding and crushing, without regard to the cost of elevating and screening, which must be added in figuring for a complete crushing plant.

It is noticeable that the larger the breaker, the lower is the cost per ton given in the tables, principally owing to the lower cost for labor. The following quotations show actual costs of crushing in different localities:

At the plant of the Minnesota Iron Co.[136] 110,447 tons of hard hematite were crushed during three months, ending January 1, 1895. Of this perhaps 60% actually needed crushing. The cost was as follows:

Supplies	$5,025.00	4.54 cents per ton.
Other accounts	3,718.47	3.36 cents per ton.
Total	$8,743.47	7.90 cents per ton.

The plant consisted of three Blake breakers each with a mouth 28×30 inches and driven by a 14×26-inch Reynolds Corliss engine of 125 horse power.

Gates Iron Works give a rough figure for getting a ton of road metal through 2½ inch ring sized further on 2, 1½ and 1 inch screens:

Cost of quarrying	20 cents to 50 cents.
Cost of crushing, including hauling up, dumping, crushing, elevating and sizing	10 cents to 40 cents.
Totals	30 cents to 90 cents.

At the Atlantic mill,[51] J. Birkinbine states that the cost of transporting to rock house, picking poor rock and crushing the copper rock is less than 7 cents per ton.

A quotation on cost of crushing by the Monarch breaker has been given at 2¾ cents per ton. (See § 18.)

E. D. Peters, Jr.,[26] deducing an average from handling large amounts under varying conditions, gives the following estimate of cost for a plant of 200 tons capacity in 10 hours:

		Per shift.	Per ton.
Power. Per day of ten hours, at 1 cent per ton		$2.00	$0.0100
Labor. Four laborers at $3.00		12.00	0.0600
Repairs. Toggles, jaw plates, etc	$0.85		
Wear of tools, babbitt, etc	.75		
Daily slight repairs on machinery	.80		
Miscellaneous items, sampling, etc	.75		
Total repairs		3.15	0.0157
Sinking fund (10 per cent. per year on original cost)		1.40	0.0070
Total		$18.55	$0.0927

COMPARISON OF JAW AND SPINDLE BREAKERS will be made along the following lines:

§ 60. (*a*) *Number Used.*—The Blake breaker of the pitman pattern with solid cast-iron frame, is the old standard breaker of the country, while the Gates,

Gates and Blake are more recent. The latter are, however, growing in favor on account of the greater capacity. Tables 8, 13 and 25 show that fifty-two of the mills use the Gates, five use the Blake and eleven use the spindle type.

§ 61. (b) *Principle of Action.*—The spindle breaker acts upon large elongated lumps on the principle of a beam supported at the ends and loaded in the middle (see Fig. 35), saving power thereby. This is true of the large lumps, but in regard to the small lumps that are down near the throat the curvature of the space is too little with reference to the length of the lump for this principle to effect any appreciable result. The jaw breaker has large corrugations on its jaws which are arranged alternately, and in consequence the elongated lumps near the throat are treated on the beam principle, tending toward the formation of cubical forms. The spindle breaker has this action of the corrugations on the small lumps only to a slight extent since its corrugations are very small or else there are none at all.

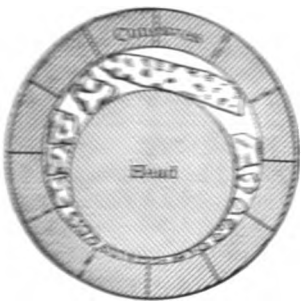

FIG. 35.—ACTION OF GATES BREAKER.

§ 62. (c) *Taper.*—The taper or decrease of width between the shoe and die per foot of depth must be small enough to hold the rock well and prevent it from snapping out. At the same time the less the taper the deeper must be the jaw in order to effect a given reduction, and the deeper the jaw the greater the movement at the end which has the greatest movement and the greater the liability to pack. The action of the jaw breakers is such that they must have less taper than spindle breakers. The ordinary taper for Gates breakers is 4½ inches per foot, but it is found that 5 inches on a Gates is as good as 4½ on a Blake.

§ 63. (d) *Power, Cost, Capacity and Weight.*—The only complete set of figures that is available is the commercial statements given in the tables under the machines. Those adopted by the Farrel Foundry and by the Gates Iron Works, are compared in Table 31. It is obvious that too much weight should not be placed upon this comparison.

TABLE 31.—COMPARISON OF BLAKE AND GATES CATALOGUE FIGURES.

Mouth Size.		Weights of the machines.		Cost of machines.		Horse power on granite.		Capacity per 24 hours.	
Gates.	Blake.	Gates.	Blake.	Gates.	Blake.	Gates.	Blake.	Gates.	Blake.
Inches.	Inches.	Pounds.	Pounds.					Tons. In.	Tons. Inches.
4 x 30	4 x 10	3,300	4,660	$400	$275	4	5	20 to 40 to 2½	35 to 2
6 x 42	6 x 20	7,800	11,200	800	650	15	15	60 to 120 to 2½	125 to 2
10 x 60	10 x 20	30,000	18,300	2,500	1,050	50	20	250 to 400 to 2½	150 to 2½
14 x 90	.....	65,800	.....	6,000	.....	125	.....	500 to 1,250 to 2½	.....
.....	15 x 30	.....	37,600	.....	2,250	.....	30	.....	350 to 3½
18 x 126	.....	89,000	.....	7,000	.....	150	.....	1,000 to 1,500 to 2½	.....
.....	20 x 36	.....	50,000	.....	2,875	.....	40	.....	500 to 5

From the table we find the two smaller sizes of Blake weigh more (141 and 144%), cost less (69 and 81%), and crush about the same quantity, employing about the same horse power to drive them. The three larger sizes of Blake [illegible] (61, 57 and 56%), cost less (42, 37.5 and 41%), require less power [illegible] 27%) and crush less rock (46, 40 and 40%). In all five sizes the

Blake has less width of jaw for the same gape (33, 48, 33, 33 and 29%). The power and capacity given for the two smaller machines are unjust to the Blake, for that machine is crushing to 2 inches diameter, while the Gates is crushing to 2½ inches. The power and capacity given for the three large sizes are unfair to both machines; to the Blake because a 15-inch gape is compared with a 14-inch and a 20-inch gape with an 18-inch; and on the other hand, to the Gates, because the Blake is crushing to 3½ inches diameter and 5 inches diameter, while the Gates is crushing to 2½ inches diameter.

A good rule to remember is that a machine of either class uses on the average about 1 horse power for every ton of rock crushed per hour to 2½ inches in size.

The Gates Iron Works have made tests of the Gates breaker and a Blake type of breaker manufactured by them. The rock used was a hard, close-grained granite with a compressive strength of about 30,000 pounds per square inch. It was in lumps as large as the machines would take. The results are given in Table 32.

TABLE 32.—COMPARATIVE TESTS OF SPINDLE AND JAW BREAKERS.

Abbreviations.—H. P.=horse power; In.=inches; Lbs.=pounds; Min.=minutes.

Kind of Machine.	Mouth Size.	Width of Throat.	Movement at Throat.	Revolutions of Driving Pulley per Minute(a)	Kind of Shoe.	Kind of Die.	Material Used.	Time Required.	Capacity per Hour.	Net Power Used.	Relative Work Used in Crushing.
	In.	In.	In.				Lbs.	Min.	Lbs.	H. P.	
Gates, No. 0..	4 x 33	1 1/16 to 1	1/16	500	Corrugated	Smooth.	1,000	3 1/6	18,000	5.2	100
Blake.....	4 x 10	1 1/16 to ⅞	1/16	250	"	Corrugated	1,000	5 1/3	11,200	6.1	187
Gates, No. 3..	7 x 48	1½ to 1	½	450	"	Smooth.	2,000	2 2/3	45,000	21.7	100
Blake.....	7 x 10	1¼ to ¾	½	250	"	Corrugated	2,000	6 2/3	18,100	12.45	144

(a) To get the revolutions of the spindle in the Gates machine divide by 2 1/6.

The "Net Power" was obtained by subtracting the power used in running empty from the total power used in crushing. The "Relative Work Used in Crushing" expresses the ratio of the product of the time by the net power used. Sizing tests of the products are given in Table 33.

TABLE 33.—SIZING TESTS OF PRODUCTS OF SPINDLE AND JAW BREAKERS.

	Gates (4 x 33).	Blake (4 x 10).	Gates (7 x 48).	Blake (7 x 10).
On 2 1/6-inch.....	3.0%	7.0%	5.0%	6.5%
Through 2 1/6 on 2-inch	5.3	10.0	17.5	23.0
" 2 " 1½ "	24.2	23.0	27.0	21.1
" 1½ " 1 "	35.0	23.2	20.8	17.8
" 1 " ¾ "	9.9	6.4	6.7	4.8
" ¾ " ½ "	3.4	9.9	7.3	7.9
" ½ " ¼ "	6.3	8.7	9.0	8.2
" ¼ " ⅛ "	3.2	4.5	2.7	4.1
" ⅛-inch.....	4.7	7.3	4.0	6.6
	100.0%	100.0%	100.0%	100.0%

The sizing tests show that the extra work put into the Blake has made itself evident in the increased amount of fine material. The author has given these tests as the best reliable data of what the machines will do, rather than to laud the merits of any particular breaker, and in studying them for comparison, the reader should bear in mind that while they appear to favor the Gates breaker, the Blake was handicapped by its small size, low capacity, and the smaller width of throat.

The author believes that for comparative tests the capacities should be more nearly equal and the tests should be continued over a greater length of time. In a test given by Bilharz,[1] the results appear to be favorable to the Blake breaker over the Gates.

§ 64. (*e*) *Size and Shape of Mouth.*—The gyrating spindle breaker in its annular crushing mouth has a much wider opening around the circle and, therefore, a much greater surface acting per revolution, than that of the jaw breaker with the same gape of opening, that is to say, receiving the same size of stone. The advantageous effect of this, however, is reduced by the fact that the number of gyrations per minute of the spindle breakers is less than the revolutions of the jaw breakers. On small machines the jaw breakers have a small area of mouth, while the spindle breakers, with the same gape, have a much larger area, owing to their annular form and are much heavier and cost more. This makes jaw breakers commendable for small mills.

§ 65. (*f*) *Distribution of the Crushing in the Mill.*—Where centralization of the rock breaking at one spot is desirable, the large spindle breakers appear to have the advantage, but where the process is better carried out by having the rock breaking located at several points, this advantage disappears.

At Mine 44, there are eleven shafts each with a 24×36-inch Blake, breaking to 12 inches and an 18×24-inch Blake, breaking to 3 inches. These are accompanied by grizzlies and hand picking of nugget copper. One large spindle breaker would be out of the question here, because the graded crushing is needed to help the hand picking of the nuggets and two large spindle breakers instead of the two Blakes would probably not be so economical.

§ 66. (*g*) *Running Cost.*—The Tables 29 and 30, showing the estimated cost of crushing, bear out the commonly accepted idea that for small breakers the jaw pattern has the advantage, while for large breakers the spindle pattern has the advantage. This is, of course, mainly due to the large hoppers which can be used with the large spindle breakers and which economize labor.

It is interesting to note that the figure representing the average cost per ton for wearing parts of jaw breakers is considerably below that for spindle breakers. Whether this is a rule or merely a result of chance, the author is unable to decide without further tests and figures.

The advantage of the large spindle machines is illustrated by the experience at the Caledonia Mill,[41] where a No. 6 Gates breaker, tended by one man, crushes 210 tons of ore in 10 hours. Three No. 5 Blakes formerly required 20 hours and 5 men to do the same work. The Gates uses about the same horse power as the 3 Blakes. The saving made by the change was $27 per day.

In regard to repairs, the jaw breaker would seem to be much easier of access. The spindle breaker would probably cause fewer repairs on the building and foundation, as it runs with less vibration than a jaw breaker. It is for this reason that it can be placed higher up in the mill and on a lighter foundation.

§ 67. (*h*) *Fine Crushing.*—The claim that the spindle breaker can crush finer than the jaw breaker for the same gape is logical. The creeping of the crusher head upon the dies or concaves will prevent packing by constantly opposing new surfaces to each other, while the limit to fine crushing with the jaw breaker is its packing.

§ 68. (*i*) *Friction.*—In comparing the two breakers as to the friction of the mechanism, we have in the spindle breaker great journal friction on the driving pinion bearing, and upon the two gear hub journals. We also have the friction of the pair of bevel gears. On the other hand in the jaw breaker we have great journal friction divided between the two boxes of the driving shaft, great journal friction on the eccentric and the friction of the toggles. No data exist for giving values to these quantities. Tabulated for comparison they are:

	Blake.	*Gates.*
Driving support journal friction.	The two main bearings.	The pinion pillow blocks.
Eccentric journal friction.	The pitman eccentric.	The spindle eccentric inner hub journal friction.
Driven support journal friction.	Swing jaw pivot.	Outer hub journal friction, step and top journal.
Transmitting friction.	Toggle sockets.	Gear teeth friction.

§ 69. (*j*) *Continuous Compared with Intermittent Action.*—Spindle breakers are continuous; that is, they are working all the time. Jaw breakers are intermittent; that is to say, they are working a little less than half the time. To make this comparison complete, however, we must introduce the amount of surface being used for crushing. The complete statement will therefore be: The jaw breaker is crushing with its whole surface for nearly half the time. The spindle breaker is crushing with nearly half its surface all the time. The word "nearly" means identically the same thing in both cases, and cuts off a little time in the former case and a little surface in the latter while the grains are coming to a bearing.

The continuous action of the spindle breaker is undoubtedly a mechanical advantage to the credit of the machine, in that uniform transmission of energy is more economical than intermittent.

The intermittent machine brings in the element of stored energy which is obtained by the heavy fly-wheels and high speed. The higher the speed, the greater the stored energy, and the less the variation in speed and consequently the less the throb which is sent back through the belts to the engine. If a Blake breaker is slowed down while it is crushing, its lowest limit of speed will be passed and the machine will stop, because the accumulated energy does not add enough to the transmitted energy to crush the rock. Reasoning the other way, the faster the machine revolves, the greater is the ratio of the accumulated to the transmitted energy. This ratio approaches, but never reaches, equality. This would indicate that the faster a Blake breaker runs, the better and more economical it will be up to the mechanical limit that is possible. This is shown as follows: If a breaker crushes 240 tons in 24 hours, this at 60 revolutions per minute would be 5.5 pounds per revolution, while at 300 revolutions it would be 1.1 pounds per revolution. That is, the variation in the power consumed from instant to instant and in the speed is less in the latter than the former case.

LOG WASHERS, WASH TROMMELS AND HYDRAULIC GIANTS.

§ 70. Log washers and wash trommels are disintegrators of clayey ores, and therefore deserve mention in this chapter. Since, however, their chief duty is separation of fine material from coarse, they are described in Chapter VIII. The usual purpose of hydraulic giants is to disintegrate ore in place, but the author has treated them in Chapter VIII, § 266.

Bibliography for Preliminary Crushing.

1. Bilharz, O., (1896). "Mech. Aufbereitung," Vol. I., pp. 65, 72. Short descriptions of Blake, Kley (Dodge type), Gates and McCully breakers, with capacity and power. Comparisons of Blake with Kley. Results of a comparative test of Blake and Gates, giving figures on capacity, power and quality of work.
2. Callon, J., (1896). "Mining," Vol. III., p. 19. Illustrations of several forms of spalling and cobbing hammers. Description, capacity and power of jaw breaker,

3. Charleton, A. G., (1884), "Tin Mining," p. 14. Description of the roasting of tin ore for friability.
4. Davies, D. C., (1886), "Metal. Min. and Mining," p. 351. Description, power and capacity of the Marsden (Blake type) breaker.
5. Davies, E. H., (1894), "Mach. Metal. Mines," p. 209. Detailed description, power and capacity of the Blake-Marsden pitman and lever types, of the Dodge breaker and of the Gates breaker.
6. *Ibid.*, p. 239. Description, capacity and power for Marsden's fine breaker, in which the jaw has a forward motion accompanied by a downward motion.
7. Egleston, T., (1890), "Metallurgy," Vol. II., p. 411. Description, capacity and power of Gates breaker.
8. Eissler, M., (1896), "Metallurgy Gold," p. 21. Description and capacity of Blake (lever) breaker.
9. *Ibid.*, p. 140. Detailed description of Gates breaker.
10. Eissler, M., (1891), "Metallurgy Silver," p. 41. Description of Blake, Dodge and Krom breakers.
11. Foster, C. LeN., (1894), "Ore and Stone Mining," p. 544. Weights of sledging and spalling hammers. Description of Blake breaker. Principle of action of Baxter breaker; of the Marsden (lever) breaker; of the Hall, which has two jaws side by side acting alternately; of the Lester, in which the pitman moves the jaw direct; of Marsden's fine breaker, and of the Dodge breaker.
12. *Ibid.*, p. 560. Description of Gates breaker.
13. Gaetzschmann, M. F., (1864), "Aufbereitung," Vol. I., pp. 45, 54 and 83. Illustrates and describes sledging, spalling and cobbing hammers.
14. *Ibid.*, p. 58. Refers to roasting for friability.
15. *Ibid.*, (1872), Vol. II., p. 661. Description of over a dozen forms of breakers, most of which are now gone out of use. Figures for capacity and power are given for some of them. Discussion of the applicability of machine breaking and the cost of the same as compared to breaking by hand.
16. Goupillière, Haton de la, (1885), "Exploitation des Mines," Vol. II., p. 687. Illustrates several forms of spalling and cobbing hammers (like Callon).
17. *Ibid.*, p. 694. Description, capacity and power of jaw breaker.
18. Hunt, R., (1884), "British Mining," p. 716. Advantages of mechanical over hand breaking. Capacity and power for different sizes. Best material for jaws. The Marsden (Blake type) breaker and the Marsden fine breaker are described.
19. Kirschner, L., (1898), "Erzaufbereitung," Part I., pp. 18 and 32. Breaking by hand. Gates breaker and breakers of the Blake type.
20. Kunhardt, W. B., (1893), "Ore Dressing," p. 7. Advantages of having breaker separate from mill.
21. Lamprecht, R., (1888), "Kohlenaufbereitung," p. 10. Description and capacity of Brown's spindle breaker and of Wolf's jaw breaker, in which the movable jaw has both an up and down and a forward and back motion, and the stationary jaw has a large spring behind it to yield in case of need.
22. Linkenbach, C., (1887), "Aufbereitung der Erze," pp. 12 and 16. Weights and dimensions of spalling and cobbing hammers.
23. *Ibid.*, p. 28. Description of Blake type of breakers, with figures on capacity, power, quality of product, wear, water and labor.
24. Lock, A. G., (1882), "Gold," p. 1,000. A list of several types of breakers.
25. Louis, H., (1894), "Gold Milling," p. 96. Essentials of a good breaker. Best material for crushing surfaces and best method of fastening them. Short description, with the capacities and powers, of the Blake, the Dodge and the Gates breakers.
26. Peters, E. D., Jr., (1895), "Copper Smelting," pp. 89-100. Comparison of hand and mechanical breaking with respect to fines produced and cost. Principles of several breakers are given.
27. Rickard, T. A., (1897), "Stamp Milling," pp. 31, 79, 151, 213. Advantages of rock breakers over hand breaking in gold mills.
28. Rittinger, P. R. von, (1867), "Aufbereitungskunde," pp. 9, 13. Describes spalling and cobbing hammers.
29. *Ibid.*, p. 23. Refers to roasting for friability.
30. *Ibid.*, (1870), "Erster Nachtrag," p. 3. Description of breaker of Blake type. Mathematical discussion of pressure of jaws. Advantages. Description of breaker with engine combined. Figures on capacity, power, labor, cost and quality of crushing. Mechanical *versus* hand breaking.
31. Rose, T. K., (1894), "Gold," p. 93. Description and capacity of Blake and Schranz breakers. Description of Dodge and Gates. Material for jaws.

32. *Am. Inst. Min. Eng.*, Vol. VI., (1877), p. 478. J. C. F. Randolph. Capacity of Blake breaker at Clausthal.
33. *Ibid.*, Vol. VIII., (1879), p. 551. R. P. Rothwell. Attendance for Blake breaker in Ontario mill.
34. *Ibid.*, Vol. IX., (1881), p. 420. E. Clark, Jr. Dimensions of Blake breaker at Przibram.
35. *Ibid.*, p. 722. T. Egleston. Attendance for Blake breaker.
36. *Ibid.*, Vol. X., (1881), p. 87. A. J. Bowie, Jr. Details, capacity and advantages of Blake breaker at Father de Smet mill.
37. *Ibid.*, Vol. XIII., (1884), p. 210. T. A. Blake. Description of Blake breaker, of Blake multiple jaw breaker, and of some plants for fine crushing, with figures on capacity.
38. *Ibid.*, Vol. XIV., (1885), p. 497. S. R. Krom. Krom's improvements on the Blake breaker.
39. *Ibid.*, Vol. XVI., (1888), p. 609. F. S. Ruttman. Blake multiple jaw plant.
40. *Ibid.*, p. 753. T. A. Blake. Description and capacities of several plants using Blake multiple jaw breaker. Advantages.
41. *Ibid.*, Vol. XVII., (1889), p. 498. H. O. Hofman. Details, capacity, wear, and attendance of Blake and Gates breakers in the Black Hills. Advantages and disadvantages of each.
42. *Ibid.*, p. 659. H. S. Munroe. Details, capacity, attendance, wear and sizing tests on Blake breakers at Bonne Terre, Mo.
43. *Ibid.*, p. 733. J. Birkinbine and T. A. Edison. Cost of crushing by Blake system.
44. *Ibid.*, Vol. XVIII., (1889), p. 263. J. M. Desloge. Comparison of eccentric and lever patterns of Blake breakers. Wrought iron used for jaw plates.
45. *Ibid.*, p. 278. E. D. Peters, Jr. Capacity of Blake breaker at Sudbury, Canada.
46. *Ibid.*, Vol. XXI., (1892), p. 521. Axel Sahlin. Power for breaker and plant. Points of a good breaker.
47. *Ibid.*, p. 537. E. C. Huxley. Power for Hoagland breaker.
48. *Ibid.*, p. 540. R. W. Raymond. Wrought iron for jaw plates.
49. *Ibid.*, p. 545. A. L. Inman. Capacity of multiple jaw breaker plant.
50. *Ibid.*, p. 546. W. P. Blake. Discussion of jaw pivoted above and jaw pivoted below.
51. *Ibid.*, p. 550. J. Birkinbine. Cost of crushing at Atlantic mill.
52. *Ibid.*, p. 583. Axel Sahlin. Power and list of machines used in Gouverneur district, New York.
53. *Ibid.*, Vol. XXII., (1893), p. 321. Jas. Douglas. Principles of the Blake, Dodge, Forster, Comet and Gates breakers.
54. *Ibid.*, Vol. XXIII., (1893), p. 171. R. A. Hadfield. Figures showing longer life of manganese steel over cast iron for jaw and cheek plates.
55. *Ibid.*, Vol. XXIV., (1894), p. 490. P. G. Lidner. Description of the roasting of a blende ore to make the quartz friable and to oxidize the pyrite for subsequent removal by washing.
56. *Ibid.*, p. 756. C. E. Dewey. Argument that a Blake breaker can make as uniform product as a Dodge.
57. *Ibid.*, Vol. XXV., (1895), p. 903. J. V. Lewis. Heating and quenching for friability at Corundum Hill, N. C.
58. *Ibid.*, Vol XXVII., (1897), p. 350. F. W. Denton. Crushing plant at Minnesota Iron mine.
59. *Ann. des Mines*, Series VI., Vol. XIX., (1871), p. 295. A. Henry. Description of hand breaking and a short note on jaw breakers in Belgium.
60. *Ibid.*, Series VIII., Vol. XX., (1891), p. 7. M. Bellom. Comparison of hand and machine breaking preparatory to hand picking. Description, power and capacity of the Schranz breaker.
61. *Berg. u. Hütt. Zeit.*, Vol. XXV., (1866), p. 40. No author. Description of the Dyckhoff and the Gardiner breakers, which are of the Dodge type; also of the Thomas breaker, which consists of a revolving roll with projections upon it which break the ore in a confined space.
62. *Ibid.*, Vol. XXIX., (1870), p. 98. No author. Description of the Marsden breaker.
63. *Ibid.*, Vol. XXXI., (1872), p. 401. No author. Description of the Archer breaker, in which the movable jaw approaches and recedes from a revolving corrugated roll.
64. *Ibid.*, Vol. XXXII., (1873), p. 342. Abstract from the *Eng. & Min. Jour.*, Vol. XIII., p. 106.
65. *Ibid.*, Vol. XXXVI., (1877), p. 213. No author. Description of Hall's (Blake type) breaker.

66. *Ibid.*, Vol. XLIII., (1884), p. 57. No author. Description of Baxter's (Blake type) breaker.
67. *Ibid.*, p. 549. No author. Description of the Baxter breaker, which has the movable jaw moving up and down in front of a roll.
68. *Ibid.*, Vol. XLV., (1886), p. 158. No author. Description of Blake-Marsden coarse breaker, lever pattern, working on the Blake principle, and the fine breaker working on the Dodge principle.
69. *Ibid.*, p. 225. No author. Principle of the Archer breaker.
70. *Ibid.*, Vol. XLVIII., (1889), p. 53. No author. Description and capacity on coal of the Lowry breaker.
71. *Ibid.*, p. 121. No author. A compound jaw breaker with sieve attachment.
72. *Ibid.*, Vol. XLIX., (1890), p. 264. No author. Description of Brinje's breaker.
73. *Ibid.*, Vol. LIV., (1895), p. 272. No author. Description, power and capacity of Gates breaker.
74. *Bull. Soc. Ind. Min.*, Series III., Vol. VII., (1893), p. 467. G. Gromier. Description of the roasting of spathic iron ore for magnetism and for friability at Allevard, France.
75. *Cal. Bull.*, No. 6, (1895), p. 14. E. B. Preston. Comparison of Blake and Gates breakers in principles, power, and capacity. Essentials of a good breaker.
76. *Clay Worker*, Vol. XXVII., (1897), p. 351. No author. Description of Champion breaker, which has the movable jaw pivoted above, motion being imparted to it through a cam, lever and toggle.
77. *Coll. Eng.*, Vol. XVII., (1896), p. 154. H. Van F. Furman. Description, with catalogue figures, of Blake, Dodge and Comet breakers. Description of Schranz breaker.
78. *Ibid.*, p. 308. No author. Notice of the Royal breaker, which is of the spindle type.
79. *Coll. Guard.*, Vol. LXIII., (1892), p. 249. Short abstract of *Inst. Civ. Eng.*, Vol. CVIII., p. 100.
80. *Deut. Topf. u. Zeigl. Zeit.*, (1891), No. 41.
81. *Dingler's Polyt. Jour.*, Vol. 198, (1870), p. 196. No author. Description of Camroux breaker, which has two very flat conical discs which revolve against each other on axes slightly inclined to one another.
82. *Ibid.*, Vol. 202, (1871), p. 89. No author. Description of the improved Marsden breaker.
83. *Ibid.*, p. 189. No author. Description, capacity and power of Codman breaker, in which the jaw has combined forward and back, and up and down motion.
84. *Ibid.*, Vol. 235, (1880), p. 260. No author. Description of Brown's spindle breaker which is much like Gates.
85. *Ibid.*, pp. 424, 465. No author. Description of Wolf's breaker, in which the movable jaw moves up and down and forward and back while the fixed jaw has a spring behind it.
86. *Ibid.*, Vol. 242, (1881), p. 147. No author. Description of the Baxter breaker.
87. *Ibid.*, Vol. 250, (1883), p. 152. No author. Description of Blake breaker.
88. *Ibid.*, Vol. 254, (1884), p. 58. No author. Description of Baxter breaker.
89. *Ibid.*, Vol. 265, (1887), p. 591. No author. Description of Schranz breaker.
90. *Engineering*, Vol. XVI., (1873), p. 430. No author. Description, power and capacity of Marsden (Blake type) breaker.
91. *Ibid.*, Vol. XXVI., (1878), p. 77. No author. Description of Hall's portable stone breaker, with engine connected. This is a Blake machine with a split jaw, one half advancing while the other half is receding.
92. *Ibid.*, p. 163. No author. Description of Motte's stone breaker, which is a spindle breaker with greatest movement on largest lumps.
93. *Ibid.*, Vol. XXX., (1880), p. 255. T. Egleston. Capacity of and labor for a Blake breaker.
94. *Ibid.*, Vol. XLIX., (1887), p. 635. No author. Description of a Lowry spindle breaker, made in England. Capacity for coal.
95. *Ibid.*, Vol. LI., (1891), p. 723. No author. Description, power and capacity of Gates breaker.
96. *Ibid.*, Vol. LXIII., (1897), p. 371. No author. Description of Dragon breaker, in which the movable jaw is pivoted above and moved directly by a cam.
97. *Eng. & Min. Jour.*, Vol. IX., (1870), p. 241. No author. Description and capacity of Blake breaker with picking table attached.
98. *Ibid.*, Vol. XI., (1871), p. 353. No author. Description, capacity and labor for feeding a Blake breaker with revolving screen attached.
99. *Ibid.*, Vol. XIII., (1872), p. 106. G. W. Baker. Figures giving capacity and cost of crushing by a Blake breaker.

100. *Ibid.*, Vol. XXII., (1876), p. 311. No author. Description, power and capacity of Blake breaker.
101. *Ibid.*, Vol. XXIV., (1877), p. 419. No author. Description, power and capacity of the Alden breaker. Both jaws are pivoted above and connected below by a connecting rod, which is given a horizontal reciprocating motion by an eccentric. This motion crushes the ore by combined pressure and grinding.
102. *Ibid.*, Vol. XXVI., (1878), p. 184. No author. Description and capacity of Brown's breaker, a spindle breaker from which the Gates was developed.
103. *Ibid.*, Vol. XXVIII., (1878), p. 53. No author. Description of Phelps breaker, a breaker of the Dodge type with only one toggle.
104. *Ibid.*, p. 393. No author. Description of Blake's Challenge breaker with toggles above eccentric.
105. *Ibid.*, Vol. XXIX., (1880), p. 84. No author. Description, capacity and power of the Buchanan Universal breaker. Jaw pivoted above. Motion imparted to one jaw by eccentric and lever. This jaw is connected to other at bottom by a connecting rod. Motion of both jaws produces combined pressure and grinding.
106. *Ibid.*, Vol. XXXV., (1883), p. 360. No author. Result of comparative tests on capacities of Gates and Blake breakers.
107. *Ibid.*, Vol. XXXVI., (1883), p. 147. No author. Description of Comet breaker.
108. *Ibid.*, Vol. XXXVII., (1884), p. 43. No author. Description of Buchanan breaker, which is of Dodge type and has toggles above eccentric.
109. *Ibid.*, Vol. XXXVIII., (1884), p. 188. T. A. Blake. Same as *A. I. M. E.*, XIII., p. 210.
110. *Ibid.*, Vol. XXXIX., (1885), p. 171. No author. Description of a multiple jaw breaker of the Dodge type.
111. *Ibid.*, p. 295. E. D. Peters, Jr. Comparison of hand *versus* machine breaking with regard to amounts of fines produced. Itemized estimate of cost of crushing by breakers.
112. *Ibid.*, p. 297. No author. Description of Griffiths' New rock breaker. Dies are in the shape of a trough, while the shoe has a cylindrical corrugated surface on the bottom and grinds the ore by a backward and forward rotation.
113. *Ibid.*, Vol. XL., (1885), pp. 257, 303, 350 and 382. S. R. Krom and T. A. Blake. Improvements in breakers claimed to have been made by Krom, and discussion concerning the same.
114. *Ibid.*, *Vol.* XLI., (1886), p. 213. No author. Description and capacity of the Brennan rock breaker, a machine of the Blake type with toggles above the eccentric.
115. *Ibid.*, Vol. XLIII., (1887), p. 96. No author. Description of the Lancaster rock breaker, a machine acting somewhat like the Blake, but having a grinding as well as a crushing action.
116. *Ibid.*, Vol. XLVI., (1888), p. 370. T. A. Blake. Details of Blake breakers in the crushing plant of the Chateaugay Ore and Iron Co.
117. *Ibid.*, Vol. LI., (1891), p. 87. No author. Description and capacity of the Buchanan granulator, a fine breaker which has its movable jaw pivoted below and its toggles above the eccentric. Its movable jaw is split in halves so that one half is advancing while the other is receding.
118. *Ibid.*, Vol. LII., (1891), p. 638. No author. Description of the Lowry spindle breaker.
119. *Ibid.*, Vol. LV., (1893), p. 323. No author. Description, capacity and purpose of the Buchanan granulator.
120. *Ibid.*, p. 581. No author. Description and capacity of the American rock breaker. The upper end of the movable jaw is driven direct by an eccentric, the lower is supported on a toggle. This gives both a crushing and a grinding action.
121. *Ibid.*, Vol. LVI., (1893), p. 106. R. A. Hadfield. Same as *A. I. M. E.*, XXIII., p. 171.
122. *Ibid.*, p. 315. No author. Description and capacity of the McCully breaker.
123. *Ibid.*, Vol. LVII., (1894), p. 273. No author. Description of Blake type of breaker, made by Farrel Foundry and Machine Co.
124. *Ibid.*, Vol. LX., (1895), p. 470. No author. Description and capacity of the New Comet breaker.
125. *Ibid.*, Vol. LXI., (1896), p. 161. No author. Description and capacity of the Taylor hand rock breaker for samples, in which the movable jaw has greater motion upon the larger than upon the smaller lumps.
126. *Inst. Civ. Eng.*, Vol. CVIII., (1892), p. 100. A. H. Curtis. Description, power and capacity of Blake (pitman) and the Gates and Comet breakers. Description of the Dodge and the Marsden (lever) breakers.
127. *Ibid.*, p. 167. J. P. Ogle. Advocates a fine jaw breaker.
128. *Ibid.*, p. 170. W. Beaumont. Description of Cole's stone breaker.

129. *Ibid.*, p. 178. M. Bellom. Descriptions, details, power and capacity of Schranz breaker.
130. *Ibid.*, p. 179. R. Bolton. Description of Lancaster breaker.
131. *Ibid.*, p. 182. R. E. Commans. Advantages of Schranz breaker.
132. *Ibid.*, p. 186. R. A. Hadfield. Comparison between ordinary steel and manganese steel for jaw plates.
133. *Iron Age*, Vol. LI., (1893), p. 12. No author. Description of the Lowry breaker.
134. *Iron & Steel Inst.*, (1884), Part II., p. 694. T. A. Blake. Outline of Blake system of fine crushing.
135. *Ibid.*, (1885), Part II., p. 705. S. R. Krom. Abstract from *A. I. M. E.*, XIV., p. 497.
136. *L. Superior Min. Inst.*, Vol. III., (1895), p. 93. H. J. Wessinger. Cost of crushing hard hematite at the Minnesota Iron mine.
137. *Mech. Mag.*, Vol. XCIII., p. 8.
138. *Ibid.*, Vol. XCIV., p. 457.
139. *Min. Jour.*, Vol. XLI., (1871), p. 58. J. Darlington. General article on breakers. Comparisons with hand breaking. Few figures on capacity. Description, power and capacity of a machine which has its jaws moved by hydraulic power.
140. *Ibid.*, p. 275. E. G. Spilsbury. Description of Dodge breaker.
141. *Ibid.*, Vol. XLII., (1872), p. 905. No author. Description of the Marsden (Blake type) breaker with engine connected.
142. *Ibid.*, Vol. XLIII., (1873), p. 189. No author. Mention of a double-acting breaker.
143. *Ibid.*, p. 549. No author. Description, capacity and power of Blake breaker.
144. *Ibid.*, p. 632. No author. Description, capacity and power of Blake-Marsden breaker.
145. *Ibid.*, Vol. XLV., (1875), p. 1101. No author. Description and capacity of Marsden's breaker.
146. *Min. Soc. N. Scotia*, Vol. I., Part II., (1892), p. 35. J. E. Hardman. Details of Forster breaker as used in Oldham and Waverly mills, and its advantages over other forms.
147. *Min. & Sci. Press*, Vol. XLIX., (1884), Oct. 18. No author. Description of Brodie breaker, in which the movable jaw rises when receding and falls when approaching the fixed jaw, thus causing pressure and grinding.
148. *Ibid.*, Vol. LXII., (1891), p. 216. No author. Short description of Dodge breaker and pin plates.
149. *Ibid.*, Vol. LXIV., (1892), p. 185. No author. Description of the Booth breaker of the Blake type, and of the Booth Combination breaker, which is practically a Blake breaker set over a Dodge.
150. *Ibid.*, Vol. LXV., (1892), p. 41. No author. Description and capacity of the Comet breaker.
151. *Ibid.*, Vol. LXIX., (1894), p. 193. No author. Description of Lowry breaker.
152. *Ibid.*, p. 337. No author. Capacity and applicability of Gates breaker.
153. *Iron*, Vol. VI., (1875), p. 101. No author. Description of the Blake-Marsden breaker.
154. *Ibid.*, Vol. VII., (1876), p. 72. No author. Description and capacity of Marsden breaker with engine connected.
155. *Ibid.*, p. 260. No author. Description, capacity and power of the Excelsior stone breaker, which acts on the Blake principle through an eccentric, connecting rod, lever and toggle.
156. *Ibid.*, p. 548. No author. Description of Archer's stone breaker, which acts on the Blake principle through a cam and a lever.
157. *Ibid.*, Vol. X., (1877), p. 648. No author. Description of Marsden breaker with engine attached.
158. *Ibid.*, Vol. XXI., (1883), p. 58. No author. Description of Marsden's fine breaker.
159. *Ibid.*, Vol. XXIV., (1884), p. 58. No author. Description of Baxter's fine breaker, in which the movable jaw moves up and down in front of a roll.
160. *North Eng. Inst. Min. & Mech. Eng.*, Vol. XLII., (1892-3), p. 87. A. G. Charleton. General article describing several breakers, giving comparison with hand breaking and capacity, power, cost, etc.
161. *Oest. Zeit.*, Vol. XXXVI., (1888), p. 201. K. Barth. Description of Blake, of Blake multiple jaw, and of Krom's improved breakers.
162. *Ibid.*, pp. 247-248. K. von Reytt. Results of test showing capacity, power and sizing tests for jaw breaker.
163. *Pract. Mech. Jour.*, III., 5, 253.
164. *Prod. Gold & Silver in U. S.*, (1880), p. 346. W. A. Skidmore. Description of Dodge breaker.

165. *Rev. des Mines*, Series III., Vol. XVIII., (1892), p. 266. Aug. Gillon. Description of several types of breaker at Exposition Universelle of 1889.
166. *Ibid.*, Vol. XXI., (1893), p. 290. L. Demaret. Advantages of mechanical crushing over breaking by hand.
167. *Sch. Mines Quart.*, Vol. XIV., (1892), p. 226. M. Bellom. Same as *Ann. des Mines*, Vol. XX., (1891), p. 7.
168. *Sci. American*, Vol. XXIV., p. 83.
169. *Ibid.*, Vol. XLVI., pp. 143, 147.
170. *Stahl u. Eisen*, Vol. III., (1883), p. 372. No author. Description of Baxter breaker, which is similar to the Blake.
171. *Ibid.*, Vol. XI., (1891), p. 329. No author. Description of Cole's breaker, which is practically two Blake breakers, one above the other.
172. *Ibid.*, p. 331. No author. Principle of Blake's multiple jaw breaker.
173. *Ibid.*, p. 423. No author. Principles of Buchanan breaker.
174. *Ibid.*, Vol. XII., (1892), p. 436. No author. Principle of Taft breaker, in which the movable jaw is pivoted above and driven by an elliptical cam.
175. *The Engineer*, Vol. XXXV., (1873), p. 110. No author. Description of Blake breaker, with portable engine connected.
176. *Ibid.*, p. 155. No author. Description and capacity of Cole's stone breaker, which has a two-faced movable jaw driven directly by an eccentric and two fixed jaws, one on each side.
177. *Ibid.*, Vol. XXXVI., (1873), p. 132. No author. Description of Hope's stone breaker, in which the jaw is pivoted above and is driven through an eccentric, a lever, and a toggle. It is also supplied with a patent cubing jaw.
178. *Ibid.*, p. 202. No author. Description of a stone breaker of the Dodge type.
179. *Zeit. Berg. Hütt. u. Salinen-wesen*, Vol. XXVI., (1878), p. 130. E. Althans. Description, capacity and power of Blake breaker; also description of Marsden and Alden breaker.
180. *Ibid.*, Vol. XXXV., (1887), p. 263. No author. Short description and capacity of Schranz breaker.
181. *Ibid.*, Vol. XLII., (1894), p. 231. No author. Description of Bartsch breaker, which is of the Dodge type.
182. *Zeit. Oest. Ing. Ver.*, (1871), p. 169. Description of Camroux breaker.
183. *Ibid.*, p. 249. Description of Codman breaker.
184. *Zeit. Ver. Deut. Ing.*, (1885), p. 117.
185. *Ibid.*, p. 476.

CHAPTER III.

ROLLS.

FINAL CRUSHING.—Chapters III. to VI. inclusive, deal with Rolls, Steam Stamps, Pneumatic Stamps, Spring Stamps, Gravity Stamps and Grinders. Many of these machines are used not only for final crushing but also for auxiliary crushing.

§ 71. PRINCIPLES AND PURPOSE OF ROLLS.—Crushing rolls consist of two iron cylinders *AA*, (Fig. 36), revolving upon the shafts *BB* in the direction of the arrows and acting upon the lump of ore *C* on the principle of the toggle joint. The revolving rolls being held in position in their journals, act radially upon the lump, gradually drawing it toward the narrowest space between them, and finally breaking it by virtue of a compressive force superior to the breaking strength of the lump. The ore is therefore broken by compression.

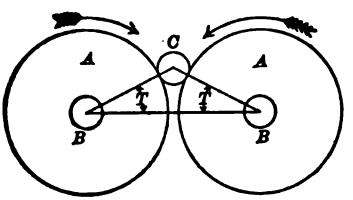

FIG. 36.—PRINCIPLE OF ROLLS.

These machines receive ore from the rock breakers or middlings from the jigs and crush to sizes that are suitable for severing the rich minerals from the waste preparatory to the washing machines. Since they act on the principle of crushing by direct pressure and since, when they are set to crush to any particular size, the particles smaller than that size can tumble through without being further crushed, rolls yield a very small percentage of fines, and are therefore especially adapted to crushing galena, chalcopyrite, blende and all the soft brittle ores, producing from them the minimum amount of fines.

Rolls when crushing malleable substances, as, for instance, native copper, native silver, etc., or hornsilver and minerals of like character, may either help or hinder the dressing. Three examples of this are given. (1) The flattening of grains which are malleable, while the brittle rock is broken to a smaller size, may be made a direct means of concentration by screening out the flattened cakes from the finely broken rock. (2) On the other hand in crushing native copper rock by rolls it is found that copper is liberated from its rock in leaves, flakes and thin arborescent forms, wholly unsuited to jigging, causing great waste in the tailings. (3) In crushing native gold ore by rolls the gold fails to be brightened preparatory to free amalgamation, the thin flakes fail to be broken up preparatory to concentration, and finally it is difficult to reduce the ore to a sufficiently fine state of division to liberate the gold. Rolls therefore do not find favor for crushing gold ores preparatory to amalgamation.

While this machine depends upon simple principles, it has reached a position of such importance in concentration that every piece of metal entering into its construction and every principle controlling its action has been the subject of much study. These parts and principles will now be considered.

§ 72. CLASSIFICATION.—In the first place, a classification is here attempted

in the hope of bringing to light any fruits of natural selection resulting from the empirical method which has been generally employed in developing this class of mill machinery. Rolls may be divided into four classes according to the work they have to do.

I. *Rolls which crush the Product of a Breaker.*—The coarsest product going to the rolls of this class contains grains ranging from 63.5 mm. to 0; the finest, grains from 12.7 mm. to 0. Perhaps the most common contains grains ranging from 38.2 mm. to 0. These products are not sized but the rolls take the coarse and fine materials as they come.

II. *Rolls which crush the Oversize of a Coarse Trommel Fed by a Breaker.*—The coarsest product fed to these rolls contains grains ranging from 63.5 mm. to 8 mm.; the finest, grains ranging from 8 mm. to 3.6 mm. The fine stuff in all cases has been sifted out.

III. *Rolls which crush the Product of a Preceding Pair of Rolls from which the Fines may or may not have been removed.*—These are generally called the No. 2 rolls in a mill. The distinctive feature of the feed is that while its largest size of grain may range from 30 to 60 mm. in diameter, it has only a few scattering grains of that size. The most of its grains are smaller.

IV. *Rolls that are crushing Jig Middlings.*—The feed of these rolls runs as high as 40 mm. and as low as 4 mm. for its maximum size, and in many instances it has some admixture of very fine grains. This product is generally a difficult one to crush, as it contains the hardest grains of gangue, and the freeing of included grains by these rolls is much less perfect than with the others, because the most friable grains were mostly freed by the earlier crushing.

Table 34 gives the feed and the product, as well as some of the dimensions and capacities obtained from rolls in the mills visited by the author. It also shows the class to which they belong.

§ 73. Maximum Size of Feed to Rolls.—By inspecting Table 34 we see that while 63.5 mm. or 2.5 inches is a maximum feed to rolls, they are rarely fed with lumps larger than 38.1 mm. or 1.5 inches; and that while it is common to feed fine dust to rolls because it is easier to do so than to sift it out before feeding, only one instance occurs of feeding anything finer than 2.12 mm. or 0.083 inch diameter with the intention of further reducing its size, and that is in Mill 31, where the middlings of the jig treating the product from the third spigot of a hydraulic classifier, which is fed with 2½ mm. to 0 grains, are sent to rolls. This product is probably as fine as 1 mm. in diameter.

§ 74. General Construction.—(See Figs. 48 to 52.) The chief parts which enter into the construction of a pair of rolls are a pair of shafts upon which are usually mounted permanent cores of soft cast iron carrying shells of hard iron, which constitute the crushing surfaces. These two shafts are of two kinds, one revolves in fixed, the other in movable boxes. The movable are held up toward the fixed boxes by powerful springs or by levers and weights, the degree of approach being regulated by shims between the boxes or by compression bolts. All the boxes, springs and shims rest upon a strong cast-iron frame. The springs are held up to their work by strong bolts or by the tensile strength of the frame. The shafts are driven by gears and pulleys or directly by pulleys.

§ 75. Frames.—The working parts of rolls are placed upon frames of cast iron. These may be either two separate parts, the one carrying the two boxes at one end of the roll shafts, the other carrying the other two boxes, as in Fig. 49*d*; or the two frames may be united by two pieces across the ends, in which case the four parts are all made into one casting, as in Fig. 49*c*. This latter construction is much to be preferred, since the settling of the mill building will not disturb the alignment of the shafts and boxes. The former, sectional, form is preferable where transportation is made on mule back.

TABLE 34.—GENERAL TABLE OF ROLL DATA FROM THE MILLS.

Abbreviations.—Bl.=Blake breaker; Cap.=Capacity; Est.=Estimated; G.=Gates breaker; gr.=grizzly; h.=hours; In.=Inches; J. M.=Jig middlings; L.=Lowry breaker; mag.=magnetic; max.=maximum; mid.=middlings; Ov.=oversize; (S.)=sectional; Th.=through; No.=number; tr.=trommel.

Mill No.	Roll No.	Feed.	Product to.	Space between rolls. Inches.	Diameter. In.	Face Width. In.	Revolutions per minute.	Est. Horse power required.	Cap. per 24 h. Tons. (a) Actual.	Cap. per 24 h. Tons. (a) Max.	Class.
3	1	From Blake.	Hand jig.	¾	12	14	100	.....	50	120	I
10	1	Th. Bl., ¾ in., on No. 1 tr., ½ in.	No. 1 trommel, ½ in.	Close.	22	14	22	.....	300	...	II
	2	Jig middlings through ½ in.	No. 1 trommel, ⅛ in.	Close.	18	14	22	.....	.....	...	IV
12	1	Th. Bl., 1 in., on No. 1 tr., 2 mesh.	No. 1 trommel, 2 mesh.	Close.	26	12	20	.....	.....	...	II
15	1	Through Blake, 1 in.	No. 1 trommel, 0.487 in.	¾	22	14	42	.....	40	...	I
	2	Jig middlings, 1 to 0.09 in.	" " "	Close.	22	14	.....	.....	.....	...	IV
16	1	(b)	No. 1 tr., 20, 10, 2 mm. (S.)	Close.	18	14	75	.....	60	70	I, IV
17	1	(c)	No. 1 trommel, 15 mm.	Close.	20	14	90	.....	45	50	II, IV
18	1	Th. Bl., 1½ in., on No. 1 tr., 0.141 in.	No. 2 trommel, 0.083 in.	¼	36	14	(d)	.....	100	250	II
19	1	Through Blake.	No. 1 trommel, 3 mesh.	.....	.....	..	.....	.....	.....	...	I
	2	Oversize No. 1 trommel, 3 mesh.	No. 2 trommel, 5 mesh.	.....	.....	..	.....	.....	.....	...	III
20	1	(e)	No. 2 trommel, 0.252 in.	⅛	24	12	92(f)	.....	100	...	II
	2	Oversize of No. 2 trommel, 0.252 in.	" " "	¼	24	12	100	.....	60–80	...	III
	3	Jig middlings, 0.252 to 0.060 in.	No. 6 trommel, 0.060 in.	Close.	16	9	120	.....	.....	...	IV
21	1	Through Blake, 1 in.	No. 1 trommel, 0.177 in.	¼	27	14	80	10	(g)	...	I
	2	Oversize No. 1 trommel, 0.177 in.	" " "	Close.	24	14	80	10	25	...	III
22	1	Through Krom breaker, 1 in.	No. 1 trommel, 12 mm.	0.4	30	16	28(h)	20	.....	...	I
	2	(i)	" " "	Close.	30	16	40	20	.....	...	III, IV
23	1	Through Blake, 1½ in.	No. 1 trommel, 7 mm.	.....	27	14	.....	.....	100	...	I
	2	(j)	" " "	Close.	27	14	.....	.....	100	...	III, IV
24	1	Th. Bl., ½ in., on No. 1 tr., 10 mm.	No. 2 trommel, 7 mm.	⅛ to ⅛	26½	12	24	.....	75	100	II
	2	Ov. No. 2 tr., 7 mm.; J.M., 10 to 0 mm.	" " "	¼ to $\frac{1}{16}$	30	12	24	....	142	190	III, IV
25	1	Th. Bl., 1½ in.; Ov. No. 1 tr., 6 mm.	No. 1 trommel, 6 mm.	Close.	30	14	8½	8	105	125	I
	2	Jig skimmings, 6 mm. to 0.	Jigs.	Close.	30	14	60	5	50	55	IV
26	1, 2	From Dodge breaker, 1 in.	No. 2 trommel, 0.294 in.	⅛ to $\frac{1}{16}$	36	16	42	9(k)	100	150	I
	3	Oversize No. 2 trommel, 0.294 in.	" " "	Close.	36	16	50	.....	200	...	III
27	1	Th. Bl. 1½ in., on No. 1 tr., 1½ in.	No. 2 trommel, ⅝ in.	⅛	36	14	42	.....	150	...	II
	2	Jig tailings, ⅝ to $\frac{21}{32}$ in.	No. 9 trommel, $\frac{21}{32}$ in.	⅛	36	14	100	.....	.....	...	IV
28	1	(l)	No. 2 trommel, 16 mm.	⅛	26	14	40	9	96	100	II, IV
	2	J.M., 16 to 5 mm.; Ov. No. 8 tr., 3½ mm.	No. 8 trommel, 3½ mm.	Close.	30	16	35	5	24	100	IV
29	1	Through Blake, 17 mm.	No. 1 trommel, 8 mm.	⅛	21	12	45	.....	.....	...	I
	2	Oversize No. 1 trommel, 8 mm.	" " "	¼	21	16	40	.....	.....	...	III
	3	Th. No. 1 tr., 8 mm., on No. 2 tr., 6 mm.	No. 2 trommel, 6 mm.	Close.	21	16	.....	.....	.....	...	II
30	1	Th. gr., 1¼ in.; Th. G. or Bl., 2½ in.	No. 1 tr., 25, 15, 10 mm. (S.)	⅛	36	14	40	10	275	...	I
	2	Th. No. 1 rolls on No. 1 tr., 25 mm.	" " "	⅛	24	14	26	6	65	...	III
	3	Jig middlings, 25 to 7 mm.	" " "	Close.	30	16	30	10	250	...	IV
	4	J.M., 7 to 0 mm.; Ov. No. 3 tr., 5 mm.	No. 3 tr., 5, 2½ mm. (S.)	Close.	24	14	35	4	30	...	IV
31	1	Through Blake, 1½ in.	No. 1 tr., 18, 15, 9 mm. (S.)	⅛	36	18	40	10	200	...	I
	2	Jig middlings, 1½ in. to 4 mm.	" " "	¼	24	12	36	7	.....	...	IV
	3	J. M., 4 mm. to 0; J.M., 2½ mm to 0.	No. 3 trommel, 2½ mm.	Close.	24	12	.....	7	.....	...	IV
32	1	Th. Bl., 1½ in.; Th. gr., 1½ in.	No. 1 tr., 12, 8 mm. (S.)	⅛	31	16	28	8	600	700	I
	2	Jig middlings, 1½ in. to 8 mm.	No. 4 tr., 5, 2 mm. (S.)	Close.	36	14	55	9	350	450	IV
	3	Jig middlings, 8 to 5 mm.	" " "	Close.	30	14	60	4	150	300	IV
	4	Jig middlings, 5 to 2 mm.	" " "	Close.	30	14	60	4	150	300	IV
33	1	Th. Bl, 1 in., on No. 1 tr., 0.5 in.	No. 1 tr., 0.5, 0.31 in. (S.)	.....	30	16	24½	.....	.....	...	II
	2	Jig middlings, 0.5 in. to 0.	No. 2 tr., 0.2, 0.13 in. (S.)	Close.	20	10	42	.....	.....	...	IV
34	1	Th. gr., 1½ in., Th. G., 1½ in.	No. 1 trommel, 15 mm.	.....	30	14	48	.....	300	...	I
	2	Ov. No. 1 tr., 15 mm.; J.M., 15 to 11 mm.	" " "	.....	30	14	.....	.....	.....	...	III, IV
	3	Jig middlings, 11 to 3 mm.	No. 5 trommel, 3 mm.	.....	30	14	.....	.....	.....	...	IV
35	1	Th. grizzly, 1 in.; Th. Gates, 1 in.	No. 1 trommel, 16 mm.	⅛	26	15	62	10	300	...	I
	2	(m)	No. 5 trommel, 2½ mm.	Close.	26	15	.....	15	.....	...	IV
36	1	Through Blake.	No. 1 trommel. 0.5 in.	.....	24	14	.....	.....	.....	...	I
	2	Ov. No. 1 tr., 0.5 in.; J.M., 0.5 to 0.31 in.	" " "	.....	20	10	.....	.....	.....	...	III, IV
	3	Jig middlings, 0.31 in. to 0.	No. 3 trommel, 0.2 in.	.....	20	10	.....	.....	.....	...	IV
37	1	Th. G., 1½ in.; Ov. No. 1 tr., 25 mm.	No. 1 trommel, 25 mm.	¾	26	15	40	.....	.....	...	II
	2	Jig middlings, 25 to 20 mm.	" " "	⅛	26	15	47	.....	.....	...	IV
	3	Jig middlings, 20 to 3 mm.	" " "	⅛	20	12	37	.....	.....	...	IV
	4	J. M., 10 to 3 mm.; Ov. No. 7 tr., 7 mm.	No. 7 tr., 7, 3 mm. (S.)	$\frac{1}{16}$	42	12	42	.....	.....	...	IV
38	1	Jig middlings, 1½ to ⅞ in.	No. 2 trommel, ⅞ in.	⅛	26	15	60	.....	.....	...	IV
	2	Jig middlings, ⅞ to ⅜ in.	" " "	¼	26	15	60	.....	.....	...	IV
	3	(n)	No. 6 trommel, 2½ mm.	Close.	26	15	60	.....	.....	...	IV
39	1	(o)	No. 2 tr., 1½ in., 15 mm. (S.)	$\frac{1}{16}$	30	16	38	.....	.....	...	IV
	2	Jig tailings, 15 to 8½ mm.	" " "	Close.	26	15	40	.....	.....	...	IV
40	1, 3	From No. 2 Blake, 1 in.	No. 1 trommel, 20 mm.	⅛	30	16	31	.....	50	75	I
	2	Jig middlings, 20 to 7 mm.	" " "	$\frac{1}{16}$	30	16	31	.....	75	75	IV
	4	J. M., 7 to 3 mm.; J. M., 3 to 0 mm.	No. 5 trommel, 3 mm.	Close.	30	16	60	.....	120	120	IV
41	1	Through No. 2 breaker.	No. 2 rolls.	.....	30	15	16	.....	.....	...	I
	2	From No. 1 rolls.	No. 1 trommel, ⅝ in.	.....	30	15	24	.....	.....	...	III
	3	Jig middlings, ⅝ to ⅜ in.	No. 2 trommel, ⅜ in.	Close.	30	15	.....	.....	.....	...	IV
	4	J. M., ⅜ to ⅛ in.; Ov. No. 5 tr., ⅛ in.	No. 5 trommel, ⅛ in.	Close.	30	15	.....	.....	.....	...	IV
	5	Jig middlings, through ⅛ in.	" " "	Close.	30	15	.....	.....	.....	...	IV
42	1	J.M., ¼ in. to 0; Ov. No. 5 tr., 0.1 in.	No. 5 trommel, 0.1 in.	Close.	22	16	50	10	.....	125	IV
43	1	J.M., 1 in. to 3 mm.; Ov. No. 2 tr., 3 mm.	No. 2 trommel, 3 mm.	Close.	30	16	60	.....	65	100	IV

Digitized by Google

TABLE 34.—GENERAL TABLE OF ROLL DATA FROM THE MILLS.—*Concluded.*

Mill No.	Roll No.	Feed.	Product to.	Space between rolls. Inches.	Diameter. In.	Face Width. In.	Revolutions per minute.	Est. Horse power required.	Cap. per 24 h. Tons. (a) Actual.	Cap. per 24 h. Tons. (a) Max.	Class.
85	1	Th. Bl., 1½ in., on No. 1 tr., 4 mesh.	No. 1 trommel, 4 mesh.	.....	20	16	.....	.....	.....	...	II
86	1	Through Blake, 1½ in.	No. 1 trommel, 0.224 in.	½	27	14	22	.....	75	...	I
	2	Oversize No. 1 trommel, 0.224 in.	" " "	Close.	20	10	30	.....	.....	...	III
87	1	Through Blake, 1½ in.	No. 1 tr., 3 and 4 mesh.	¼	36	14	40	.....	100	125	I
	2	Oversize of No. 1 tr., 3 and 4 mesh.	" " "	Close.	36	14	37½	.....	60	100	III
88	1	Through Blake, 1½ in.	No. 1 trommel, 3 mesh.	½	27	14	40	.....	75	...	I
	2	Oversize of No. 1 trommel, 3 mesh.	" " "	Close.	27	14	.....	.....	.....	...	III
89	1	Th. L., ¾ in.; Th. No. 1 tr., 1 in.	No. 2 trommel, $\frac{1}{16}$ in.	Close.	30	18	90	.....	.....	...	I
	2	Oversize No. 2 trommel, 1 to $\frac{1}{16}$ in.	" " "	Close.	30	18	100	.....	.....	...	III
	3	Mid. of mag. separator, $\frac{1}{16}$ in. to 0.	" " "	Close.	30	18	100	.....	.....	...	IV
90	1	From Buchanan fine breaker, 1 in.	No. 2 rolls.	½ to ¾	24	14	100	.....	60	...	I
	2	From No. 1 rolls.	No. 2 trommel. (p)	Close.	18	12	130	.....	60	...	III
91		(See text, § 102 *et seq.*)	.....	.....	...	...	.....	.....	.....	...	.....
92	1	Th. Bl., ¾ in., on No. 2 tr., ¼ in.	No. 3 trommel, 0.060 in.	Close.	30	15	34	.....	90	120	II
	2	Th. No. 2 tr., ¼ in., on No. 3 tr., 0.060 in.	No. 4 trommel, 0.058 in.	Close.	24	16	130	.....	25	40	II
	3	Th. No. 2 tr., ¼ in., on No. 4 tr., 0.058 in.	" " "	Close.	24	16	130	.....	25	40	II
93	1	Through Blake, 1½ in.	Log washer.	1¼	30	14	25	.....	80	190	I
	2	(q)	No. 1 trommel, 6 mm.	¼	24	12	30	.....	10	...	III

(a) Actual capacity is what the rolls actually do in 24 hours; maximum capacity is what it is estimated they would do if run at their maximum capacity. (b) Through Blake, 20 mm.; No. 1 Jig tailings, 20 to 10 mm.; No. 2 Jig middlings, 10 to 2 mm. (c) Through No. 1 trommel, 15 mm. on No. 2 trommel, 10 mm.; Jig middlings, 10 to 0 mm. (d) One roll makes 44 revolutions, the other 45. (e) Through grizzly, 1½ inches, and Blake, 1½ inches, on No. 1 trommel, 0.252 inch. (f) 102 revolutions per minute caused excessive wear. (g) 40 tons for hard ore, 60 for soft. (h) At 35 revolutions the rolls became glazed. (i) Oversize No. 1 trommel, 12 mm.: Jig middlings, 12 to 3 mm.; poor sand from trunking machine; poor settling table heads. (j) Oversize No. 1 trommel, 7 mm.; Jig tailings, 7 to 3 mm.; Jig middlings, 3 to 0 mm. (k) This is the result of actual measurement. (l) Through Dodge, 1¼ inches, on No. 1 trommel, 40 mm.; Oversize No. 2 trommel, 16 mm.; Jig tailings, 40 to 60 mm. (m) Jig middlings, 25 mm. to sand; Oversize No. 5 trommel, 2½ mm. (n) Jig middlings, ⅜ inch to 2½ mm.; Oversize No. 6 trommel, 2½ mm. (o) Jig tailings, 1½ inches to 15 mesh; Oversize No. 2 trommel, 1½ inches. (p) This varies from ¼ inch down to 20 mesh. (q) Oversize No. 1 trommel, 6 mm., which treats No. 1 roll stuff.

§ 76. SHAFTS.—They are usually of mild steel or wrought iron, as shown in Table 40, occasionally of cast iron. The greatly added weight of cast iron tends to offset, by heavy axle friction, the advantage of the cheaper material. It is best to have but two bearings for a shaft, since with three bearings the shaft causes greater friction if it gets out of line. In some cases, however, where an overhanging pulley or gear is so heavy as to cause excessive strains in the shaft, it is necessary to have three bearings.

§ 77. THE CRUSHING CYLINDERS are made either of one solid casting bored to fit the shaft, all of which must be discarded when the surface is worn off; or they consist of a permanent central core of soft iron which is forced on the shafts by hydraulic pressure, and to the trued surface of which a movable shell or wearing part is fastened. The former method is now pretty much abandoned, even where the foundry is next door.

S. R. Krom makes his core and tires as follows: The core is in two parts (see Fig. 37), each a little less than half the length of the face of the roll shell; they are slightly conical, having their lesser diameters inward. One part is shrunk on permanently to the shaft and fixes the position of the roll, the other is drawn into place by four powerful draw bolts. The inside of the tire has two corresponding conical surfaces. The movable half core is split on one side, which springs enough by the pressure of the tire to tightly hug the shaft. The

cores are lightened by substituting a design with hub, with eight heavy spokes and a tire, for the solid casting. This form is now quite generally adopted by other manufacturers. The half cores should not be so narrow as to leave any considerable part of the tire unsupported in the middle, that is, not over 4 or 5 inches.

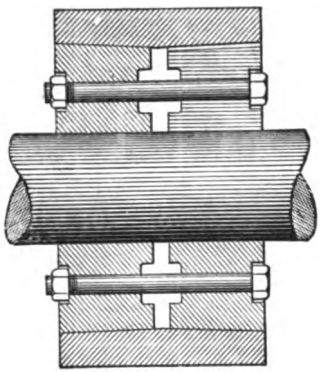

FIG. 37.—KROM'S METHOD OF ATTACHING ROLL SHELLS.

§ 78. ROLL SHELLS OR TIRES.—The thickness of the shell varies from 2 to 5½ inches, the width and diameter are matters of design, and will be taken up later. (See § 89 and § 90.) An idea of the sizes used may be gained by reference to Table 35. The crushing surfaces are either those produced in the foundry or they are turned down in a lathe to true cylinders. The inside surface of the shell is generally turned slightly conical to fit the core. In Mill 10 this difference in inside diameter amounts to ½ inch in 14 inches of width. Other measurements can be found under Mills 24 and 30, in the table. To make this inside turning easy in chilled cast-iron shells, gibs or staves of wrought iron are placed in the moulds and the shells cast around them. For example, Mill 35, roll No. 1, has eight soft gibs of wrought iron. These soft staves can be turned to conical

TABLE 35.—ROLL SHELLS.

Abbreviations.—Act.=actual; Cap.=capacity; Ch. I.=chilled iron; Chr. S.=chrome steel; Ch. S.=chilled steel; C. or R. S.=cast or rolled steel; C. S.=cast steel; D.=Dry; Est.=Estimated; F. S.=Forged steel; H.=hours; H. S.=Hammered steel; In.=inches; M. S.=Manganese steel; O. H. R. S.=Open hearth rolled steel; R. S.=rolled steel; R. T. S.=Roll tire steel; S.=Steel; S. S.=Semi-steel; W.=Wet.

Mill No.	Roll No.	Diameter. In.	Face. Inches.	Thickness. Inches.	Run.	Material.	Weight of both Shells. Pounds. New.	Weight of both Shells. Pounds. Old.	Cost per Pound Cents.	Life. Days.	Life. Tons.	Est. Act. Cap. per 24 H. Tons.	Wear per Ton. Pounds. Gross.	Wear per Ton. Pounds. Net.	Gross Cost per Ton. Cents.
8	1	12	14	.....	D.	.....	.....	.....	.....	.....	.....	50	.....	.....	.....
10	1	22	14	3	W.	Ch. I.	1,250	300-500	.....	20-30	2,500-3,750	125	0.400	0.2720	.....
	2	18	14	2½	W.	" "	800	300-500	.....	180	.....	.....	.....	.....	.....
12	1	26	12	.....	....	.....	.....	.....	.....	.....	.....	.....	.....	.....	.....
15	1	22	14	3	W.	Ch. I.	1,600	.....	.....	.....	.....	40	.....	.....	.....
	2	22	14	3	W.	" "	1,600	.....	.....	72	720	.....	2.222	.....	.....
16	1	18	14	2½	D.	" "	800	.....	.....	(a)2,347	141,000	60	0.0057	.....	(b)0.023
17	1	20	14	3	W.	" "	800	.....	.....	540	21,000	45	0.0879	.....	.....
18	1	36	14	3½	D.	H. S.	.....	.....	.....	.....	.....	100	.....	.....	.....
19	1	36	14	.....	....	H. S.	.....	.....	.....	.....	.....	.....	.....	.....	.....
						M. S.	.....	.....	.....	.....	.....	.....	.....	.....	.....
						H. S.	.....	.....	.....	.....	.....	.....	.....	.....	.....
	2	36	14	.....	....	M. S.	.....	.....	.....	.....	.....	.....	.....	.....	.....
20	1	24	12	4 (c)	W.	C. S.	(d)1,711	(d)268	.....	90-300	.....	100	0.1901 to 0.0570	0.1603 to 0.0481	.....
	2	24	12	4 (c)	W.	" "	(d)1,711	(d)268	.....	90-300	.....	60-80	0.2723 to 0.0815	0.229 to 0.0687	.....
	3	16	9	3	W.	" "	(d)696	.....	.....	180-250	.....	.....	.....	.....	.....
21	1	27	14	4	W.	Chr. S.	2,000	.....	9.8	460	(e)18,400 27,600	(e)40 60	(e)0.1087 0.0735	.....	(e)1.065 0.7101
	2	24	14	3¾	W.	O.H.R.S.	1,700	.....	10	360	9,000	25	0.1804	.....	1.804
22	1	30	16	4	D.	Ch. I.	3,200	.....	3¾	540	108,000	200	0.0296	.....	0.1111
22	2	30	16	4	W.	Ch. I.	3,200	.....	3¾	600	.....	.....	.....	.....	.....
23	1	27	14	.....	....	Ch. S.	.....	.....	.....	.....	.....	100	.....	.....	.....
	2	27	14	.....	....	" "	.....	.....	.....	.....	.....	.....	.....	.....	.....
24	1	28½	12	(f)	W.	Ch. I.	1,300	1,000	(g) 3¼	108	7,500	75	0.1733	0.040	0.5633
	2	30	12	(h)	W.	" "	1,780	1,260	(g) 3¼	120	14,500	142	0.1227	0.0358	0.3989
25	1	30	14	4¾	....	" "	2,660 (i)2,442	2,095 2,096	(g) 3¼ (g) 3¼	430 360	45,000 40,500	105	0.0591 0.0659	0.0125 0.0042	0.192 0.196
	2	30	14	4¾	W	" "	2,660	2,442	(g) 3¼	360	6,000	50	(j)	.....	1.441
26	1	36	16	3½	D.	C.or R.S.	3,200	700	(k)6or7	180	13,000	100	0.2461	0.1223	1.7227
	2	36	16	3½	D.	" "	3,200	700	(k)6or7	180	13,000	100	0.2461	0.1223	1.7227
	3	36	16	3½	W.	" "	3,200	300-400	(k)6or7	60	10,000	200	0.320	0.285	2.24
27	1	36	14	3½ (l)	W.	Chr. S.	2,852	.....	6	120	9,000	150	0.3169	.....	1.9014
	2	36	14	3½ (l)	W.	" "	2,852	.....	6	90-100	8,000	.....	0.3565	.....	2.139

TABLE 35.—ROLL SHELLS.—*Concluded.*

Mill No.	Roll No.	Diameter. In.	Face. Inches.	Thickness. Inches.	Run.	Material.	Weight of both Shells. Pounds. New.	Weight of both Shells. Pounds. Old.	Cost per Pound Cents.	Life. Days.	Life. Tons.	Est. Act. Cap. per 24 H. Tons.	Wear per Ton. Pounds. Gross.	Wear per Ton. Pounds. Net.	Gross Cost per Ton. Cents.
28	1	26	14	3	D.	Ch. I.	(d)1,600	.....	5½	240	8,400	96	0.1905	.....	1.048
						H. S.	1,600	.....	(m)9½	200	(n) 7,000		0.2286	.....	2.171
	2	30	16	3	D.	C. S.	2,000	.....	6	300	3,000	24	0.666	.....	4.000
30	1	36	14	(o)	D.	(p)Ch. I.	2,600	.....	(p)6	210	50,000	275	0.052	.....	0.312
	2	24	14	(o)	W.	(p)S. S. (p)C. S.	1,700	.....	(p)7	280	18,000	65	0.0944	.....	0.661
30	3	30	16	(q)	W.	(p)S. S. (p)C. S. (p)Ch.I	2,200	.....	(p)6	112	30,000	250	0.0733	.....	0.5133
	4	24	14	(o)	W.	(p)S. S. (p)C. S. (p)Ch.I	1,700	.....	.....	224	6,500	30	0.2615	.....	.....
31	1	26	18	3	W.	Ch. I.	2,000	800	.....	168	38,000	200	0.0526	0.0816	.....
	2	24	12	3½	W.	" "	1,200	600	.....	.....	10,000	.....	0.1200	0.0600	.....
	3	24	12	3½	W.	" "	1,200	600	.....	.....	14,000	.....	0.857	0.0429	.....
32	1	31	16	4	D.	" "	2,700	900	4	56	30,000	600	0.090	0.060	0.36
	2	36	14	3½	W.	R. T. S.	2,100	700	(r)10	90	35,000	350	0.060	0.0040	0.600
	3	30	14	3½	W.	" " "	1,300	500	(r)10	300	45,000	150	0.0289	0.0178	0.289
	4	30	14	3½	W.	" " "	1,300	500	(r)10	300	45,000	150	0.0289	0.0178	0.289
33	1	30	16	.....	....	.....	.....	.....	.....	.....	.....	.....	.....	.....	.....
	2	20	10	.....	....	Ch. I.	.....	.....	.....	.....	.....	.....	.....	.....	.....
34	1	30	14	.....	....	.....	.....	.....	.....	.....	(n)10,000	.....	.....	.....	.....
	2	30	14	.....	....	.....	.....	.....	.....	(n)720	.....	.....	.....	.....	.....
	3	30	14	.....	....	.....	.....	.....	.....	.....	.....	.....	.....	.....	.....
35	1	26	15	3½	D.	Ch. I.	2,200	1,800	4	120	30,000	300	0.0733	0.0133	0.2933
	2	26	15	3½	W.	Ch. I.	2,200	1,800	4	90	9,000	.....	0.2444	0.0444	0.9776
						Chr. S.	2,200	.....	.....	(n)720	.....	.....	.....	.....	.....
37	1	26	15	.....	....	.....	.....	.....	.....	.....	.....	.....	.....	.....	.....
	2	26	15	.....	W.	.....	.....	.....	.....	.....	.....	.....	.....	.....	.....
	3	20	12	.....	W.	.....	.....	.....	.....	.....	.....	.....	.....	.....	.....
	4	42	12	.....	W.	.....	.....	.....	.....	.....	.....	.....	.....	.....	.....
38	1	26	15	.....	W.	Ch. I.	2,180	.....	.....	84	.....	.....	.....	.....	.....
	2	26	15	.....	W.	" "	2,180	.....	.....	56	.....	.....	.....	.....	.....
	3	26	15	.....	W.	S.	.....	.....	.....	56	.....	.....	.....	.....	.....
39	1	30	16	.....	....	C. S.	2,600	.....	.....	90	22,700	.....	.....	.....	.....
	2	26	15	.....	....	" "	2,100	.....	.....	100	24,500	.....	.....	.....	.....
40	1	30	16	3⅝	W.	R. S.	2,700	541	(s)6¾	113	20,000	50	0.1350	0.1079	0.911
						Ch. I.	2,500	.....	(s)8½	55	10,000		0.2500	.....	0.8750
	3	30	16	3⅝		C. S.	2,620	650	(s)6⅛	114	24,000		0.1092	0.0821	0.7098
						M. S.	2,650	650	(s)10	222	52,000		0.0510	0.0385	0.510
	2	30	16	3⅝	W.	Ch. I.	2,500	.....	(s)8½	30	8,000	75	0.3125	.....	1.094
						C. S.	2,620	.....	(s)6⅛	87	18,776		0.1395	.....	0.907
						R. S.	2,700	.....	(s)6¾	112	26,481		0.1019	.....	0.688
	4	30	16	3⅝	W.	C. S.	2,620	.....	(s)6⅛	88	18,705	120	0.1400	.....	0.910
						R. S.	2,700	.....	(s)6¾	83	22,657		0.1192	.....	0.805
42	1	22	16	.....	....	Chr. S.	.....	.....	4	30	.....	.....	.....	.....	.....
42	1	30	16	4	W.	M. S.	2,660	600	.....	105	5,000	65	0.532	0.36	.....
						Ch. I.	2,400	(t)2,800	.....	(t)	100		(t)24.0	1.0	.....
85	1	20	16	.....	....	H. S.	.....	.....	.....	.....	.....	.....	.....	.....	.....
86	1	27	14	3½	D.	Ch. I.	1,200	300	.....	(u)540	18,000	75	0.0666	0.0500	.....
	2	20	10	2⅝	W.	" "	800	300	.....	(u)360	12,000	.....	0.0666	0.0416	.....
87	1	36	14	5½	D.	" "	2,600	1,000	.....	180	18,000	100	0.1444	0.0888	.....
	2	36	14	4½	W.	Chr. S.	2,400	600	.....	250	15,000	60	0.160	0.120	.....
88	1	27	14	.....	W.	F. S.	.....	.....	.....	.....	.....	75	.....	.....	.....
	2	27	14	.....	W.	" "	.....	.....	.....	.....	.....	.....	.....	.....	.....
89	1	20	18	3¼	D.	S.	2,700	.....	.....	.....	.....	.....	.....	.....	.....
	2	20	18	3¼	D.	"	2,700	.....	.....	.....	.....	.....	.....	.....	.....
	3	20	18	3¼	D.	"	2,700	.....	.....	.....	.....	.....	.....	.....	.....
90	1	24	14	4½	D.	Ch. I.	2,010	(d)	.....	90–150	4,000	60	.....	.....	.....
	2	18	12	4	D.	" "	1,100	(d)	.....	180	4,000	60	.....	.....	.....
92	1	20	15	4½	D.	" "	2,800	.....	.....	(n)540	.....	90	.....	.....	.....
	2	24	16	4	D.	S.	2,300	.....	.....	.....	.....	25	.....	.....	.....
	3	24	16	4	D.	"	2,300	.....	.....	.....	.....	25	.....	.....	.....
93	1	30	14	.....	W.	Ch. I.	2,000	.....	.....	.....	1,000,000	80	0.002	.....	.....
	2	24	12	.....	W.	" "	1,000	.....	.....	.....	2,000,000	10	0.0005	.....	.....

(*a*) Eighteen years. (*b*) This mill did not give the cost of iron per pound, so this is calculated on an assumed value of 4 cents per pound merely to show the very low cost per ton. (*c*) ½ to ¾ inch thick when worn out. (*d*) Means computed, not weighed. (*e*) The two values given are for hard and soft ore respectively. (*f*) Two inches at one end, 3 inches at other. (*g*) Sell for ¼ cent. (*h*) 2¾ inches at one end, 3¾ inches at other. (*i*) From No. 2 rolls. (*j*) Goes to No. 1 rolls when worn uneven. (See footnote to Table 36.) (*k*) Sell for 0.35 cent. (*l*) Shells are worn down to ¾ inch, if possible. (*m*) Sell for ½ cent. (*n*) Not yet worn out. (*o*) Three inches at one end, 3½ inches at other. (*p*) These materials cost about the same delivered. (*q*) 2¾ inches at one end, 3½ inches at other. (*r*) "Free on Board" at Chicago. (*s*) Chilled iron sells for ¾ cent per pound, steel for 0. (*t*) Gave out after 40 hours; did not wear out. (*u*) This is the life of an unusually good pair. Sometimes they develop holes and cracks, and do not last half this time.

surfaces much more easily than the chilled cast iron. The shells are mounted and centered upon the cores by drawing them into place with draw bolts, which may also act as keys, or they are wedged up into line by driving in wooden wedges. The former are to be preferred as the wooden wedges are troublesome to put in and, if the rolls are run wet, troublesome to take out. The nuts on the bolts holding the shells in place should be frequently inspected, as the shells are likely to expand and work loose on the hubs.

§ 79. MATERIAL FOR ROLL SHELLS.—A material for roll shells to be satisfactory should be as hard as possible to avoid attrition, tough enough not to chip and not so malleable as to flow. Roll shells are made of cast iron deeply chilled on the outside; also of cast steel, rolled or hammered steel, chrome steel and manganese steel. Ferro-aluminum and projectile steel have also been tried. The following summary has been made from Table 35 to show the extent to which various materials are used: Chilled iron, 38; cast steel, 13; steel (kind not given), 6; chrome steel, 5; hammered steel, 5; manganese steel, 5; rolled steel, 4; cast or rolled steel, 3; roll tire steel, 3; semi-steel, 3; chilled steel, 2; forged steel, 2; open-hearth rolled steel, 1. It will be noticed that there are 52 steels of various kinds against 38 chilled irons.

Chilled cast iron has the advantage of low first cost (2 to 4 cents per pound), and if a foundry is near by, the worn-out shells have a market value ($\frac{1}{4}$ to $\frac{1}{2}$ cent per pound). It has the disadvantage of short life and uneven wear, becoming at times deeply pitted on the surface, so much so as to seriously hinder the work of crushing, long before the shells are otherwise worn out, and consequently the weights of old shells are greater than with steel. It also chips at the edges with hard ore. Its hardness prevents it from being easily trued up, a difficulty which is not met with in the steels of mild or medium hardness.

Wrought-iron and mild steel shells have a tendency to flow or bead over at the ends too much, extending the length of the shell at both ends. On this account these metals do not find favor.

Cast steel is a medium-priced material (6 to $6\frac{1}{2}$ cents per pound) and has a medium life; the surface is not as reliable as that of the next three materials.

Forged steel, either rolled or hammered, is the most reliable material that exists. With reasonable attention it wears evenly. It costs $6\frac{1}{2}$ to 10 cents per pound. It wears very thin before the shells are rejected, but the latter generally have no commercial value. The author quotes Mill 26, however, where they sell for $7 per ton.

Chrome steel, made by the Chrome Steel Works, is forged steel containing chromium. It has all the advantages of forged steel and the manufacturers claim that it has longer life. It costs about 10 cents per pound.

Manganese steel, made by the Taylor Iron & Steel Co., has extraordinary hardness and toughness. It costs about 10 cents per pound and the manufacturers pay about 1 cent per pound for old shells delivered at the factory. Mill 40 reports one remarkable record of length of life, given in Table 35, but could not repeat it. One of the worn-out shells in this test weighed 250 pounds, and was $\frac{9}{16}$ inch thick. The other weighed 400 pounds and was $1\frac{1}{8}$ to $1\frac{1}{2}$ inches thick. The later shells gave out by cracking when but half worn out. The large size of the casting was thought to be the cause of the difficulty. Others have had the same experience due to the uneven quality of the metal. The manufacturers claim that while shells 4 inches thick crack, shells 3 inches thick do not. Their reason for this is that they cannot anneal perfectly up to 4 inches. When the material comes from the mould it is brittle and this brittleness is removed by annealing, which consists of heating to redness and plunging into cold water. On thick pieces there is apt to be a core separated in this operation which impairs the strength of the whole piece. It is also claimed that roll shells of this metal,

that have become heated by work, expand and do not return to their original size when cool. They are liable, therefore, to cause trouble by working loose on their cores. This, however, might possibly be prevented in wet crushing by the use of wooden wedges between the shell and the core. Sometimes this expansion causes the roll to split longitudinally.

Chrome steel and forged steel appear to be excellent for roll shells, and if the difficulties of casting and stretching can be overcome, manganese steel will probably rank even higher. The final decision as to which will be used must be decided by the ledger. The items besides life which enter into this computation, are cost of shells at the works, the freight, the time lost in repairs, and the value of the old shells. Mr. Argall reports an exception in the case of chrome steel. He has found it too brittle for roll shells. One set lasted only eight hours and one shell cracked entirely through and dropped off the core. A second set was tougher, but even these broke in a week's service, large pieces cracking off on the edges, in one case 14 inches long by 1¼ inches wide.

In Table 35 the wear of shells is given in two columns. The gross wear makes no allowance for the metal that is left in the worn-out shell, while the net wear does so. The cost given in the table is the gross cost, allowing nothing for the sale of the old shells. A few figures of net cost were obtained and are given in Table 36 with the corresponding gross cost. It should be noted that Mills 24 and 25 are treating soft lead ores in Missouri.

TABLE 36.—NET COST OF SHELLS.

Mill No.	Roll No.	Material.	Cost per pound.	Gross cost per ton.	Net cost per ton.
			Cents.	Cents.	Cents.
24	1	Chilled iron.....	3¼	0.5634	0.5294
	2	" "	3¼	0.3990	0.3774
25*	1	Chilled iron.....	3¼	0.192 0.196	0.1804 0.183
	2	" "	3¼	.....	0.0012
26	1&2	Cast or rolled steel.....	6 or 7	1.7227	1.7044
	3	" " "		2.24	2.238
40†	.....	.....	.....	.....	.....

* In Mill 25, No. 2 rolls send their shells after crushing 6,000 tons to No. 1 rolls where they crush 40,500 tons, but there are not enough of these shells to supply all the No. 1 rolls, hence some of the latter receive new shells and with them crush 45,000 tons.

† The net cost is the same as the gross cost in Table 35 for all materials except chilled iron.

The rolls which show the more favorable gross wear in Table 35, running from 0.0005 to 0.2 pounds of iron per ton, are nearly all of them crushing mine ore and mostly galena associated with limestone. For example, Mill 16, roll 1; 22, 1; 24, 1 and 2; 25, 1; 28, 1; 30, 1, 2 and 3; 31, 1, 2 and 3; 32, 1, 2 and 3; 35, 1; and Mill 93, rolls 1 and 2. The rolls which show unfavorable gross wear, 0.3 to 0.6 pounds of iron per ton crushed, are mostly middlings rolls or those that are called upon to crush hard, gritty, cutting ores. For example, Mill 17, roll 1; 25, 2; 26, 3; 27, 2; 28, 2 and Mill 43, roll 1. Mill 40 has given the most complete figures on comparison of metals of any mill in Table 35. Mill 20 reports that chilled iron wears 60 to 120 days, cast steel 90 to 300 days, forged steel 120 to 300 days, ferro-aluminum less than cast iron. Mill 39 reports that if the life of chilled iron in tons crushed be taken as 100, then the life of cast steel was 149; rolled steel, 158; manganese steel, 154, and ferro-aluminum, 94.

§ 80. Truing Roll Shells.—The greatest care is needed to make the rolls wear evenly. If the ends of the rolls are not in the same plane then each roll will lap beyond the other. This state of things, if allowed to continue, will make flanges on each of the two protruding ends. These flanges may be re-

moved in the machine shop by turning down the roll, or buffing it down with an emery wheel. They may be removed on the spot with an emery block, a lever and a weight, as in Mill 25 (see Fig. 38). S. R. Krom has a slide rest and lathe tool adapted to truing up the roll shells in place. To keep the mill running and save time, it is well to have spare shafts with rolls and boxes upon them. The worn rolls can be quickly hoisted out and the new lowered into place. Each shaft should run only in its own boxes.

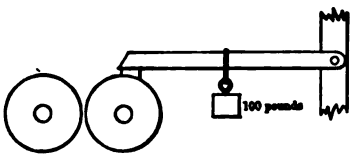

FIG. 38.—ARRANGEMENT OF EMERY BLOCK.

It is far better to prevent the formation of flanges if one can, and so avoid the loss of time caused by removing them. If rolls are fed with the cheek pieces of the hopper close against the ends of the rolls, so that feed lumps 1½ inches in diameter cannot be nipped by the rolls nearer than ¾ inch from the end, then it follows that the idle ends of the rolls will wear less and will become flanged and presently need to be turned down. This formation of flanges can be avoided by placing the cheek pieces a little more than the half diameter of the largest feed lump from the ends of the rolls, which guarantees that the roll shells will wear to the very ends. Coupled with this a little horizontal grate with movable bars is placed in the steep sloping feed trough and certain of the bars are removed to guide the feed stream and therefore the wear of the rolls. If the central bars are removed the rolls are fed mainly at the center; if the end bars are removed the rolls are fed mainly at the ends. In this way the wear can be directed to the highest part. In Mill 39, for No. 1 roll, this grate is made of ½-inch round bars, 1½ inches apart. It is generally considered best to keep the ends worn slightly smaller than the middle and so to forestall flange making, for if the edges are flanged and the rolls are pressed tight together there is great danger that the edges will be nicked. This is particularly true with chilled iron. At Mill 20 the rolls are fed by a trommel, the rotation of which in one direction one-half the time delivers the ore toward one end of the rolls, while its rotation in the opposite direction the other half of the time delivers toward the other end and thus keep the rolls true.

Another method of keeping the rolls true is to set them one day with, say ¼ inch end laps, the next morning set the laps at the opposite ends; the rolls ends are said to wear more on the wearing day than they lose on the rest day. In Mills 20 and 25, the plan has been adopted, with favorable results, of wearing the shells on the fine rolls until they have lost their surfaces too much, then to hand them over to the coarse rolls, where the inequalities are of much less moment. To effect this with the least loss of time, all of the rolls of a mill must be of the same diameter, face and make, and spare shafts and boxes should be used. An instance is reported to the author of the avoidance of the evils of flanges by having one roll 1½ inches longer than the other. The long roll soon forms two flanges, one at each end, and the short roll fits into the space between them. This roll is known as the Geyer roll.

Out of 24 pairs of rolls in the mills we find that:

Nine pairs of rolls are kept true by placing the cheek plates off and carefully guiding the feed.

Four pairs are kept true by placing the cheek plates off and running an evenly distributed feed.

Two are kept as true as possible with the cheek plates close by guiding the feed.

Two pairs of fine rolls send their shells to the coarse rolls.

One pair is trued by lapping the ends on alternate days.

Two pairs are trued by the emery block, lever and weight.

One pair has flanges removed by emery block. The complete surface is trued by periodically running one roll backward and feeding quartz sand.

Three pairs are trued up in the machine shop.

At Mill 23, the edges of the No. 1 rolls are made beveled to prevent the edges from chipping. This is after the design given by Rittinger. Gates Iron Works, if desired, bevel roll shells of chilled iron so that the faces are 1 inch narrower.

The thin edges resulting from flowing or beading over at the ends, particularly upon wrought-iron and mild steel rolls, can be removed by hammer and cold chisel.

§ 81. Side Adjustment.—To facilitate adjusting the rolls endwise, the Gates Iron Works furnishes special collars which are placed on the roll shafts on both ends of the bearing of that end of the roll shaft which is opposite to the driving pulley. They are in the form of a split clutch nut. When loosened they can, by turning them upon the shaft, give a very perfect end adjustment. When tightened they act as guiding collars. Side thrust, which makes guiding collars necessary, is said by Gates to act in a direction toward the driven side. The Colorado Iron Works put guiding collars of iron on the outer ends of each bearing. They fasten these to the shaft by taper pins and then place loose brass collars between them and the ends of the boxes.

§ 82. Feeders.—A sudden rush of ore will choke the best rolls unless they are provided with an extraordinary amount of power and strength; a deficit of ore causes loss of time. A feeder furnishes the simplest corrective for both of these. This is obtained in practice either by taking the rock direct from some machine which limits output, for example, a breaker, or by using some of the feeders, such as the Tullock with feed sole shaken by cam and spring; the Vezin, with feed sole shaken by an eccentric; the Hendy, the roller feeder, the pushing block feeder, or the Gates swing stirrup feeder. The Hendy feeder, if used, should have a feed chute in which the stream can spread to the width of the rolls. It is important that the feeder should deliver an almost continuous stream to the rolls. Rittinger's rule is that the feeder should give not less than four times as many impulses as the rolls make revolutions per minute. Vezin finds that 250 impulses per minute makes a virtually continuous stream. Where the ore contains considerable clay which causes the ore to slip and prevents it from being drawn down between the rolls, to hasten the crushing an oscillating ram[95] has been used which forces the clayey material down between the rolls.

§ 83. Pillow Blocks and their Alignment.—Means must be provided for regulating the distance apart of the rolls to suit the crushing and to compensate for the wear of the roll shells. The mechanism must be such that on the one hand the rolls when crushing cannot approach nearer than the distance at which they are set, and on the other that they will not recede at all with the ordinary work of crushing, but if a hard object like a drill point is fed, they will open and let it through to save breaking the machine. It is for this purpose that the boxes of one of the rolls are made movable. There are three ways of doing this and of maintaining the alignment or parallelism of the rolls.

(1) (See Figs. 48*a*, 49*a* and 49*d*.) To have the boxes of the movable roll slide in guides independently of each other. The rolls are held up to their work by springs, the alignment of the rolls being accomplished either by putting in shims of equal thickness on each side to hold the boxes the required distance apart, or by using compression bolts which enable the rolls to stay apart the proper distance.

(2) To connect the two movable boxes by a rigid frame which slides upon long guides on the two sides of the machine and gives perfect alignment. They are held up to their work by tension rods and springs and prevented from

coming too close by shims or compression bolts. The Jackson rolls, made by McFarlane, and Wild's patent rolls, made by the Union Iron Works, are instances of this form.

(3) (See Figs. 49*c*, 50 and 51.) To support the two movable boxes upon two vertical levers swinging upon pivots below called swinging pillow blocks, and to hold the rolls up to their work by tension rods and springs, and to hold them apart by lock nuts on the tension rods. In the Buchanan rolls, made by the George V. Cresson Co., of New York, there are special adjusting bars or rods which pass from the swinging pillow block back through a bracket cast on the end of the main frame. By turning up lock nuts on the outer ends of these rods the rolls can be opened and held at any desired distance apart. These rods are so arranged as to allow the rolls to spring apart in case of necessity. These swing levers are mounted in two ways: (1) The two levers are united below in one solid casting, making a swing U lever which swings upon a pin perfecting the alignment of the movable roll. S. R. Krom's rolls (see Fig. 50) are of this form. With this construction it is difficult to make the swing U lever of sufficient rigidity to keep the boxes perfectly in line and avoid heating. (2) The swing levers are pivoted below independently of each other, self-lining boxes being used and the alignment of the shaft being obtained either by lock nuts or right and left coupling nut on the tension rods. Rolls made by the E. P. Allis Co. (see Fig. 51) and those made by the F. M. Davis Iron Works Co., are of these two classes respectively.

The fixed pillow block is either bolted to the main frame or it is cast with the main frame and lined up with it in the machine shop, or lastly, a pedestal is cast on the main frame into which a tubular box is dropped.

§ 84. Boxes or Bearings.—The boxes or bearings for the shafts are either

TABLE 37.—JOURNALS FOR ROLLS.

Mill No.	Roll No.	Diameter of Journal.	Length of Journal.	Projected Area of Journal.	Pressure of Springs.	Size of Rolls.	Revolutions per Minute.
		Inches.	Inches.	Sq. Inches.	Pounds.	Inches.	
10	1	4	8	32	.....	22 x 14	22
10	2	4	8	32	.....	22 x 14	18
17	1	4	6½	26	.....	20 x 14	90
20	1	4½	.....	.....	.....	24 x 12	22
21	1	4½	12	54	.....	27 x 14	80
21	2	5	12	60	.....	24 x 14	80
22	1	8	10	80	.....	30 x 16	28
24	1	7	9	63	.....	28½ x 12	24
24	2	7	9	63	.....	30 x 12	24
25	1	6½	9	58½	12,000*	30 x 14	8½
25	2	6½	9	58½	.....	30 x 14	60
26	1	8	10	80	40,000 to 60,000	36 x 16	42
26	2	8	10	80	40,000 to 60,000	36 x 16	50
27	1	5½	13	71½	.....	36 x 14	42
27	2	5½	13	71½	.....	36 x 14	100
28	1	4 11/16	.....	.....	.....	26 x 14	40
28	2	4 11/16	.....	.....	.....	30 x 16	35
30	1	6	9	54	.....	36 x 14	40
30	2	5	7	35	.....	24 x 14	26
30	3	8	9	72	.....	30 x 16	30
30	4	5	7	35	.....	24 x 14	35
31	1	9	12	108	.....	36 x 18	40
31	2	4½	10	45	.....	24 x 12	36
31	3	4½	10	45	.....	24 x 12	.....
35	1	9	16	144	.....	26 x 15	62
42	1	6	10	60	6,000	22 x 16	50
43	1	7	8	56	.....	30 x 16	60
40	1	7	10	70	.....	30 x 16	31
40	2	7	10	70	.....	30 x 16	31
40	3	7	10	70	.....	30 x 16	31
40	4	7	10	70	.....	30 x 16	60
86	1	4½	10	45	.....	27 x 14	22
86	2	4⅞	10	48¾	.....	20 x 10	30
87	1				.....	36 x 14	40

* These rolls have lever and weight instead of springs.

divided, with a cap and base, or they are made in one solid tube; in either case they are babbitted over the portion which takes the wear. Where a tubular box is used, it is aligned upon the pillow block by fitting it to the pedestal by cylinder and socket joint with vertical axis, or by ball and socket joint. Gates Iron Works use this design on their best rolls. The angle for the dividing plane between the cap and base varies in different makes from 45° to 50° with the horizontal. It is intended to conform to the resultant force obtained by combining the weight of the rolls, etc., with the pressure of resistance to crushing of the rock. Krom puts a water jacket on his boxes and by running water into this a hard-worked roll may be kept cool. By making the bearing surfaces of sufficient size and keeping out the grit there is no need of water cooling. Over the ends of the boxes shields are usually placed to prevent the entrance of dust and grit. A groove in the end of the box with cotton waste in it also prevents entrance of grit. For speed in rebabbitting boxes the spare set of shells, shafts and boxes already recommended will serve. In addition to these a traveling truck overhead, with a differential hoist, will lift the old parts and carry them out, bringing back the new roll shaft, shell and boxes. The time lost in changing may, with these precautions, be reduced to perhaps one-quarter of what it would be without them.

The sizes of journals used on rolls are given in Table 37. A discussion of the sizes of journals will be found later in § 95 under "Journal Friction."

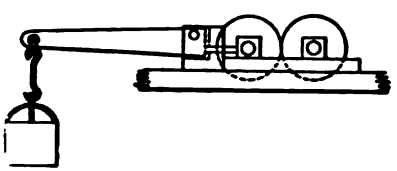

FIG. 39.—ROLLS WITH LEVER AND WEIGHT.

§ 85. SPRINGS OR WEIGHTS.—The use of a weight and bent lever (see Fig. 39), to hold the movable box in position has nearly gone out of practice in this country (see Table 40), the difficulty being that unless the rolls are run very slowly, as in Mill 25, roll No. 1, the weights will not have time to act in case a drill point is fed. In Mill 16, No. 1 rolls, which have a lever and weight, run fast, because the ore is very soft and free from dangerous lumps.

Springs are of: (1) Para rubber, usually in sections with iron plates between; or (2) of steel. Rubber is used where rolls of minimum cost are desired for short-lived operations. Steel springs are the standard for permanent work and the forms used are those known as spiral car springs. A sufficient number of these are put together to give the necessary compressive force. Steel springs should be long enough so that there shall be no danger of the spirals ever closing together. The mode of applying the springs is to put them outside the movable box with the frame or bolts as the tension part (see Figs. 49*c* and 49*d*), or outside the fixed pillow block with bolts to transmit the force (see Fig. 50). The latter arrangement appears to be most favorable. Springs should be given equal tension on each side to make the rolls wear evenly. The nest of springs is sometimes compressed between two plates by special bolts called compression bolts, as shown for the main springs in Figs. 52*a* and 52*b*. This takes the tension off from the main bolts and is to be commended, although it adds slightly to the first cost. It makes the setting up of the great tension bolts very easy, since the springs do not have to be relaxed as is the case where shims are used; they are simply moved intact to such a position that they will bear when the rolls are the desired distance apart. Two compression bolts are best, as it is difficult to distribute the load evenly on more than two.

The *average* resistance to crushing is probably less than 5,000 pounds pressure, (see § 254). This pressure will rise much higher and fall to nothing, according to the rate and size of feed. This pressure is sustained by the main tension bolts

and by the inertia of the rolls. The pressure of springs, on the other hand, may be from 15,000 to 100,000 pounds. The spring pressure is usually taken up by the shims or compression bolts. The springs yield only when the resistance to crushing reaches their limit of compression. They then act as the safety valve on a boiler does, by preventing the pressure from rising greatly.

When rolls are set close it is common to remove the shims altogether. This is a costly practice, for the great spring pressure is by this means transferred from the shims, where it belongs, to the journals of the rolls which, in consequence, have to work with a constant pressure of 15,000 to 100,000 pounds upon them, instead of a variable pressure which generally averages less than 5,000 pounds. Brunton finds that not only the babbitt but also the shells wear out much faster under this treatment. Even when the whole spring pressure is required for the crushing the shims should still be used to prevent the rolls from quite coming in contact in case the feed stops.

Table 38 shows the total pressure exerted by the springs used by the Gates Iron Works upon their 26×15-inch and their 36×15-inch rolls, as determined by a hydraulic press. To get the pressure for each battery of springs the figures given in the table should be halved. These springs are $7\frac{15}{16}$ inches long normally and $5\frac{15}{16}$ inches when compressed solid.

TABLE 38.—SPRINGS ON THE GATES ROLLS.

Length of Spring.	Amount of Compression.	Pressure Exerted.	
		On 26-inch Roll.	On 36-inch Roll.
Inches.	Inches.	Pounds.	Pounds.
$7\frac{15}{16}$	0	0	0
$7\frac{7}{16}$	½	15,000	22,500
$6\frac{15}{16}$	1	30,000	37,500
$6\frac{7}{16}$	1½	41,250	52,500
$5\frac{15}{16}$	2	48,750	71,250

The total pressures used by the Colorado Iron Works for 27×14 and 20×12-inch rolls (see Figs. 52*a* and 52*b*), are given in Table 39.

TABLE 39.—SPRINGS ON ROLLS OF COLORADO IRON WORKS.

Amount of Compression.	Total Pressure between 27x14-inch Rolls.	Total Pressure between 20x12-inch Rolls.
Inches.	Tons.	Tons.
½	10	6
1	21	13
1½	33	19
3	65	38

It is not intended that the high values given in Table 39 shall be used in running, as the rolls are designed for only 30-tons constant pressure between the 27×14-inch rolls and 20 tons between the 20×12-inch rolls, the factor of safety of the compression bolts being $7\frac{1}{3}$ in the former and 8 in the latter.

Roger has designed crushing rolls to do away with springs when crushing soft rock. One roll is placed above the other, as shown in Fig. 40. The plane of the axes slopes 45°.

The Sturtevant centrifugal rolls also do away with springs. In these each roll consists of a shaft with a loose roll shell encircling it. The shell is lined

up and prevented from end motion by two large flanges keyed to the shaft, one on each side. The space between the shaft and the shell is nearly filled with sector-block weights of cast iron with slots in them, through which iron pins parallel to the shaft are passed to guide them in their radial journey toward and away from the shaft. When the rolls are run rapidly the weights fly out until they come to a bearing on the inner surface of the roll shell, line up the latter and revolve it by friction. The above mentioned flanges have rims on their outer edges and when the rolls are running normally there

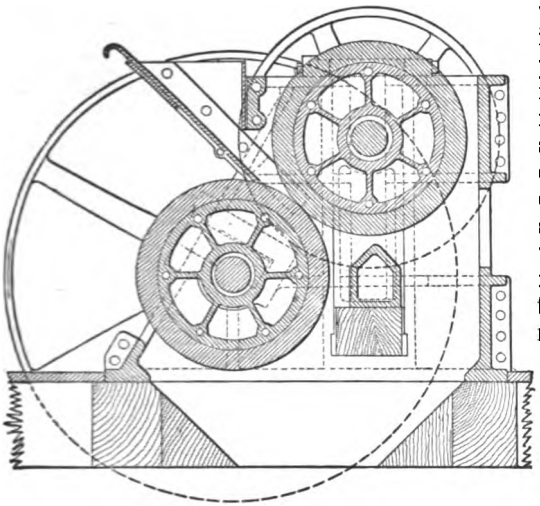

FIG. 40.—SECTION OF ROGER'S ROLLS.

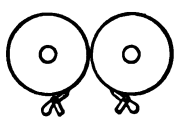

FIG. 41.—METHOD OF APPLYING SCRAPERS.

is a space of $\frac{1}{32}$ inch radially between these rims and the sector-block weights. If for any reason the roll shell becomes moved eccentrically out of line more than $\frac{1}{32}$ inch then part of the sector-block weights bear against the rims and not against the roll shell. The rolls do away with springs and movable boxes, for when a hard object is fed it overcomes the centrifugal force of the weights that should do the crushing, and the roll shells yield and let the piece through.

§ 86. SCRAPERS of iron are sometimes used to remove adhering fines from the face of the roll at the lowest point in its revolution (see Fig. 41). They are necessary in fine wet crushing with greasy ores like serpentine, which cause trouble by forming a slippery coating of slime on the surface of the roll.

§ 87. DRIVING MECHANISM.—Rolls are called geared rolls when driven by belts and gears, or belted rolls when driven by belts alone. The former appear to be preferred for slow speed coarse crushing, the latter for high speed fine

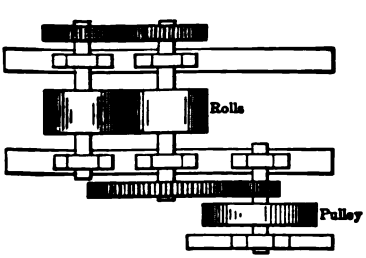

FIG. 42.—DESIGN A.

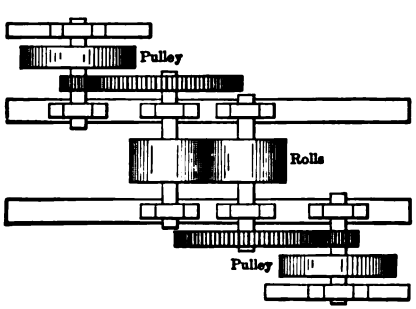

FIG. 43.—DESIGN D.

crushing. This classification, however, is not by any means universal, as will be seen by Table 40, which gives the classes to which the rolls belong and the mechanism by which they are driven.

TABLE 40.—DRIVING MECHANISM.

Abbreviations.—C. I.=cast iron; Co.=company; Diam.=diameter; Fdy.=foundry; I.=iron; In.=inches; Mat.=material; Mch.=machine; Mfg.=manufacturing; Min.=minute; M. S.=mild steel; No.=number; R.=rubber; Rev.=revolutions; R. S.=rolled steel; S.=steel; W. I.=wrought iron; Wks.=works.

Mill No.	Roll No.	Maker.	Class. (*a*)	Design. (*b*)	Shaft. Mat.	Shaft. Diam. In.	Length of journal. In.	Springs.	Pulley. Diam. In.	Pulley. Face. In.	Belt Width. In.	Rev. per Min.
10	1	Schellenbachs Sons	II	A.		4	8	S.				22
	2	" "	IV	A.		4	8	S.				22
12	1	W. F. Mosser & Co.	II	A.								20
15	1	Fort Scott Fdy. & Mch. Co. (*c*).	I		S.	4⅝						42
	2	" " " " "	IV									
16	1	Pittsburg Fdy. & Mch. Co.	I, IV	A.				(*d*)				75
17	1		II, IV	C.		4	6½	R.	48	10		90
18	1	Hendy & Meyer	II	J.				S.				{44 {45
19	1	Hendy & Meyer	I	J.				S.				
	2	" " "	III									
20	1	Eagle Foundry Co.	II	H.	S.	4½		R.	48		10	92
	2	" " "	III	H.	S.	4½		R.	48		10	100
	3		IV	H.				R.				120
21	1		I	H.	W. I.	4½	12	S.	60		12	80
	2	Becket Fdy & Mch. Co.	III, IV	H.	W. I.	5	12	S.	48		12	80
22	1	Chicago Iron Works (*e*)	I	H.	S.	8	10	S.	72		10	28
	2		III, IV					S.				40
23	1	Walburn-Swenson Co	I	A.				R.				
	2	" "	III, IV	A.				R.				
24	1	Birmingham I. Fdy.	II	B.	W. I.	7	9	R.	(*f*)108		(*f*)11½	24
	2	" " " "	III, IV	B.	W. I.	7	9	R.	(*f*)108		(*f*)11½	(*g*) 24
25	1	Fulton I. Wks., St. Louis	I	A.	W. I.	6½	9	(*d*)				(*h*)8½
	2	" " " " "	IV	(*i*)H.		6½	9	R.	72		12	(*h*) 60
26	1&2	Fraser & Chalmers	I	H.	R. S.	(*j*) 6,8,9	10	R.	72	12	10	42
	3	" " "	III	H.	R. S.	(*j*) 6,8,9	10	R.	72	12	10	50
27	1	Jackson	II	A.	S.	5½	13	S.				42
	2		IV	I.		5½	13	S.				100
28	1	Jackson	II, IV	A.	S.	4⅝		S.				40
	2	"	IV		W.I.	4⅝		S.				35
29	1	Jackson	I	A.								45
	2	Fraser & Chalmers.	III	H.								40
	3	" " "	II	H.								
30	1	Fraser & Chalmers	I	D.	M. S.	6	9	R.				40
	2		III	A.		5	7	R.				26
	3		IV	G.		8	9	S.				30
	4		IV	A.		5	7	R.				35
31	1	Fraser & Chalmers	I	D.		9	12	S.				40
	2	" " "	IV	A.		4½	10	S.				36
	3		IV	A.		4½	10	S.				
32	1	Chicago Iron Works (*e*)	I					S.				23
	2	" " "	IV					S.				55
	3	" " "	IV					S.				60
	4	" " "	IV					S.				60
33	1	Chicago Iron Works (*e*)	II	A.		8						24½
	2		IV	G.		5						42
34	1	E. P. Allis Co.	I									48
	2	" " " "	III, IV									
	3		IV									
35	1	Fraser & Chalmers	I			9	16	S.	84	11	8	62
	2		IV					S.				
36	1		I	A.								
	2		III, IV	A.								
	3		IV	A.								
37	1		II	H.					96	9		40
	2		IV	H.					84	9		47
	3		IV	H.					42	8½		42
	4		IV	H.					96	12		37
38	1	Fraser & Chalmers	IV	H.	C. I.	(*k*) 9		S.	84	9	(*l*)	60
	2	" " "	IV	H.	C. I.	(*k*) 9		S.	84	9	(*l*)	60
	3	" " "	IV	H.	C. I.	(*k*) 9		S.	84	9	(*l*)	60
39	1	Fraser & Chalmers	IV	A.	S.	7		R.				38
	2	" " "	IV	H.	C. I.	(*k*) 8					(*m*)	40
40	1&3	Fraser & Chalmers	I	H.		7	10	R.				31
	2	" " "	IV					R.				31
	4	" " "	IV					R.				60
42	1	Tuttle Mfg. & Supply Co. (*n*)	IV	I.		6	10					50
43	1	Montana Iron Works	IV	G.		7	8	R.				60
85	1	E. P. Allis Co.	II	A.								
86	1	McFarlane & Co.	I	A.		4½	10	R.				22
	2		III					R.				30
87	1	Fraser & Chalmers	I	D.				R.				40
	2	Jackson	III	(*o*)				S.				37½
88	1	Colorado Iron Works	I	A.	M. S.							40
	2		III	G.								

TABLE 40.—DRIVING MECHANISM.—*Concluded.*

Mill No.	Roll No.	Maker.	Class. (a)	Design. (b)	Shaft. Mat.	Shaft. Diam. In.	Length of Journal. In.	Springs.	Pulley. Diam. In.	Pulley. Face. In.	Belt Width. In.	Rev. per Min.
89	1	S. R. Krom	I	I.	.....	.....	.....	S.	.....	....	.....	90
	2	" "	III	K.	.....	.....	.....	S.	.....	....	.....	100
	3	" "	IV	.....	.....	.....	.....	S.	.....	....	.....	100
90	1	.....	I	I.	.....	.....	.....	S.	60	....	10	100
	2	M. Hoagland Sons & Co.	III	I.	.....	.....	.....	S.	48	....	10	130
92	1	.....	II	F.	.....	(p) 4⅝	.....	R.	.....	....	.....	34
	2	.....	II	I.	.....	(q) 7	.....	R.	(r)	....	.....	130
	3	.....	II	I.	.....	(q) 7	.....	R.	(r)	....	.....	130

(a) This refers to the four classes as explained in § 72. (b) This refers to the eleven designs as explained in § 87. (c) Now Walburn-Swenson Co. (d) These rolls have lever and weight. (e) Now Gates Iron Works. (f) The pinions of both rolls are driven by one pulley 9 feet in diameter with a 11¼-inch belt. (g) Reduced from 130 by the gear. (h) The revolutions of the pinions are seven times this. (i) This is driven by two open belts from two shafts. (j) These three dimensions are at the pulley, at the journal and at the roll respectively. (k) This shaft has a core bored out 3 inches in diameter. (l) This is an 8-ply belt. (m) One belt is 8, the other is 10 inches wide. (n) Now Anaconda Copper Mining Co. (o) This is sometimes A, but usually G. (p) 5¼ inches in the journal. (q) 6¼ inches in the journal. (r) One pulley is 72 inches diameter, the other 36.

There are eleven designs which the author has found for driving mechanisms. Of these the first seven are for geared rolls and the last four for belted rolls.

A. Rolls connected by finger gears on one side, one roll being driven by pinion gear on the other side (see Figs. 42 and 48*c*). In this design the belt shaft is placed on the same level with the roll shafts, its speed is reduced by one gear transmission to one of the roll shafts, this shaft again in turn transmitting power to the other roll shaft by long-toothed gears called finger gears or star gears. These finger gears have little work to do except when no ore is fed, as the chief driving of the second roll is done by the friction of the ore. These gears admit of a certain amount of wear on the roll shells before the teeth of one gear bottom the spaces of the other. When this happens a second smaller pair of finger gears is mounted, and when the roll shells have worn too small for these, a third. These last serve until the shells are worn out.

B. Same as A, except that both gears are on the same side.

C. Same as A, except that the pinion gear is replaced by a pulley.

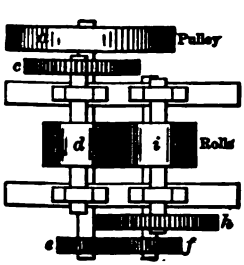

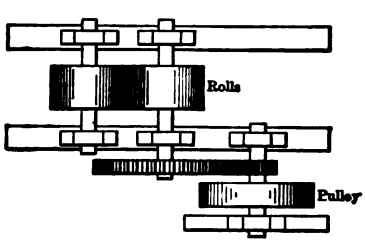

FIG. 45.—DESIGN G.

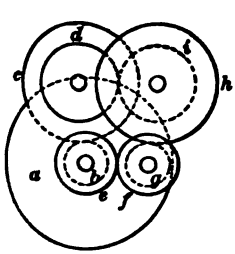

FIG. 44.—DESIGN E.

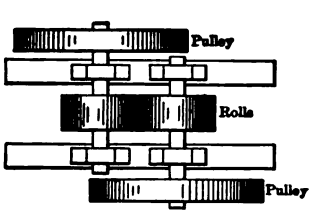

FIG. 46.—DESIGN H.

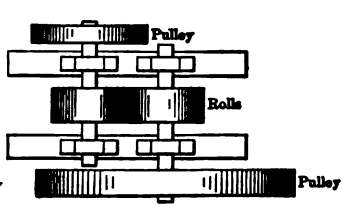

FIG. 47.—DESIGN I.

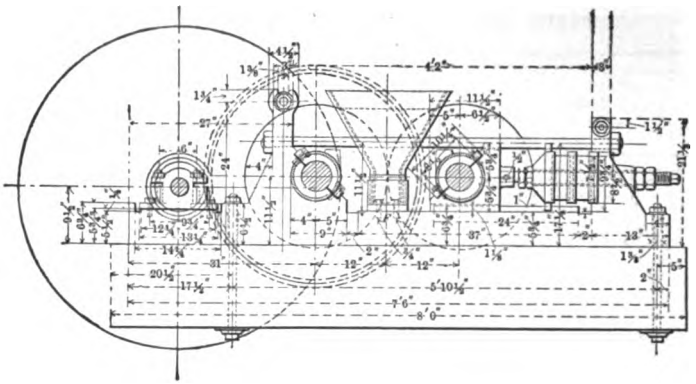

FIG. 48*a*.—SIDE ELEVATION OF FRASER & CHALMERS' FINGER-GEARED ROLLS.

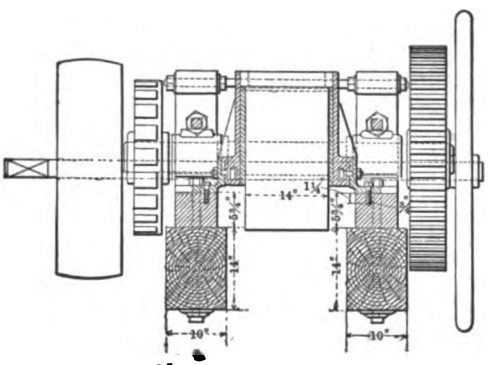

FIG. 48*b*.—END ELEVATION.

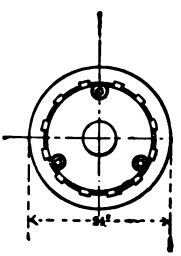

FIG. 48*d*.—END VIEW OF ROLL.

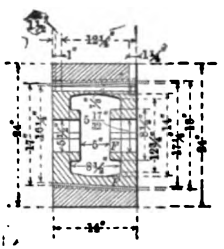

FIG. 48*e*.—SECTION OF ROLL.

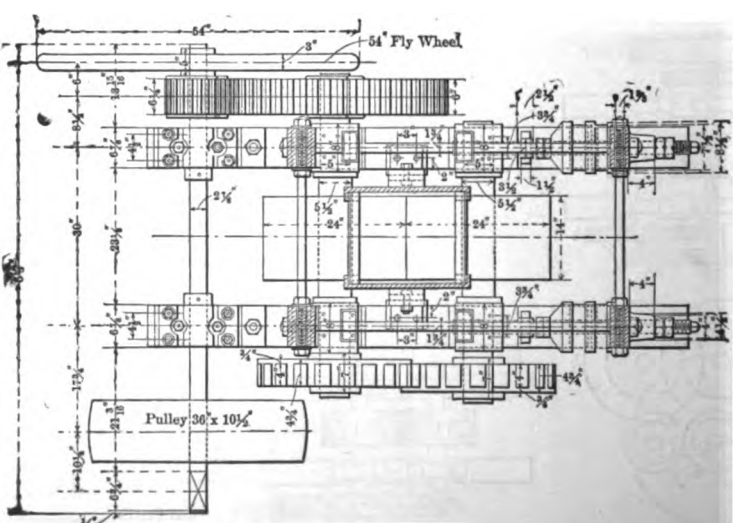

FIG. 48*c*.—PLAN.

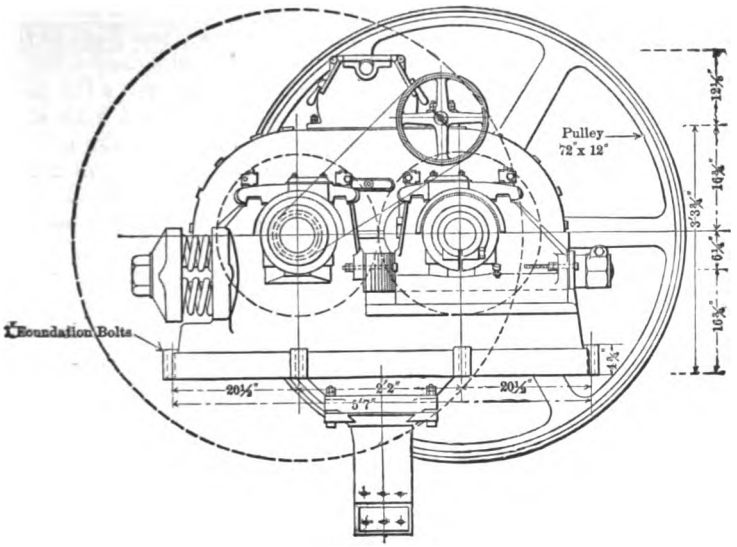

FIG. 49*a*.—SIDE ELEVATION OF THE GATES "HIGH-GRADE" ROLLS WITH FEEDER ATTACHED.

TABLE 41.—SIZES AND WEIGHTS OF BELTER AND GEARED ROLLS AS RECOMMENDED BY FRASER & CHALMERS.

Diameter.		Face.	Kind.	Weight.
Inches.		Inches.		Pounds.
36	x	16	Belted.	19,000
36	x	14	Geared.	20,000
			Belted.	17,400
30	x	16	Geared.	17,000
			Belted.	14,300
36	x	15	Belted.	10,200
26	x	12	Geared.	13,200
			Belted.	13,400
24	x	14	Geared.	9,500
			Belted.	8,900
22	x	10	Geared.	8,000
			Belted.	7,100
20	x	10	Geared.	7,600
			Belted.	6,900
18	x	10	Geared.	5,000
			Belted.	4,900
16	x	10	Geared.	4,200
			Belted.	4,000
12	x	12	Geared.	3,000
			Belted.	3,000
9	x	9	Belted.	1,000

TABLE 42.—SIZES OF ROLLS AND PULLEYS AND SPEEDS OF BELTED ROLLS RECOMMENDED BY GATES IRON WORKS.

Design.	Diameter.		Face.	Size of Belt Pulley.	Revolutions of Rolls per Minute.
	Inches.		Inches.	Inches.	
High-grade	9	x	4	15x3	300
High-grade	26	x	15	72x12	140
High-grade	36	x	15	96x15	100
Economic	18	x	10	42x6	180
Economic	24	x	14	60x8	140
Economic	30	x	14	72x10	110
Sectional	16	x	10	42x6	200

D. Each roll driven separately by a pinion gear (see Fig. 43).

E. Geared rolls with a pair of counter shafts below (see Fig. 44). In this design the belt shaft is placed below one of the rolls and drives the fixed roll above it through one reducing gear transmission, while it drives the movable roll by one equal speed transmission to a counter shaft on a level with it, and then by one reducing gear transmission to the roll. In this form the driving pinion of the movable roll is about plumb under the gear, so that the roll can be moved in sufficiently to completely wear out the shells without seriously disturbing the meshing of the teeth of the gears. On this account finger gears are not needed.

F. Same as E, except that the counter shafts are above. It is probable that the loss of power in designs E and F by the extra gear transmission is balanced by the loss from finger gears of preceding designs.

G. Same as A, except that the finger gears are removed and the second roll is driven by friction from the first (see Fig. 45). This design may be made from any of the preceding designs, except C, by removing all the gears except the single transmission from the belt shaft to the fixed roll. Making these changes on C makes it become design K. In using design G for coarse crushing, some device, such as Vezin's auxiliary spring (design K), should be used to keep the movable roll in motion and prevent shocks which would otherwise result from intermittent feeding.

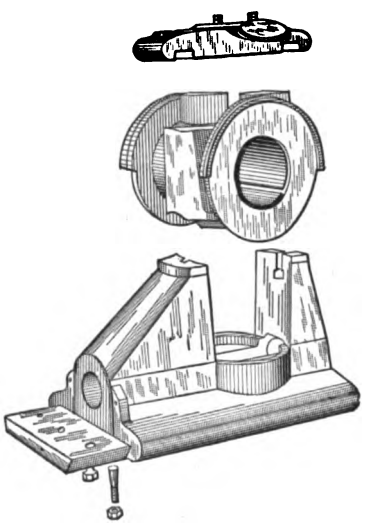

FIG. 49*b*.—DETAILS OF THE GATES PEDESTAL AND PILLOW BLOCK FOR "HIGH GRADE" ROLLS.

H. Each roll driven by a large pulley (see Figs. 46, 49*a*, 49*c* and 49*d*). These pulleys are driven either by one open and one crossed belt from the same shaft, or by two open belts from separate shafts running in opposite directions. Where a crossed belt is used, it always drives the movable roll.

I. Similar to H, except that one pulley is made smaller than the other (see Figs. 47, 50 and 51). The small, narrow pulley is put upon the movable roll and does little work. It merely serves to keep the roll in motion should the feed cease to come. This design, which crosses the narrow belt, has the advantage over the preceding that it saves the use of an extra shaft for two open belts and it avoids the crossing of a wide belt.

J. Similar to I, except that both pulleys are on the same side of the rolls. This makes the rolls more convenient to approach and handle, but requires an outside bearing which introduces a complication in the lining of boxes.

K. Similar to H, except that there is but one pulley, the movable roll being driven by friction from the fixed roll. This design has the advantage that it halves the number of belts and pulleys, which take up space in the mill and frequently interfere with the spouts. Where the rolls are not set close together it has the disadvantage that the movable roll will stop when feed ceases and start with a jump when feed starts again. Vezin has overcome this by the use of auxiliary springs (see Figs. 52*a* and 52*b*), which put the rolls in contact when the ore feed lets up and by so doing keep the loose roll running. The total pressure exerted by these auxiliary springs is 1½ to 2¼ tons on 20×12-inch rolls and 2¼ to 3¼ tons on the 27×14-inch rolls. This method guarantees that the periph-

cry speed of both rolls shall be the same. It is applicable only to rolls that have compression bolts and no shims.

The following summary shows the number of each design appearing in Table 40: Design A, 23; design B, 2; design C, 1; design D, 2; design E, 0; design F, 2; design G, 5; design H, 20; design I, 7; design J, 2; design K, 1.

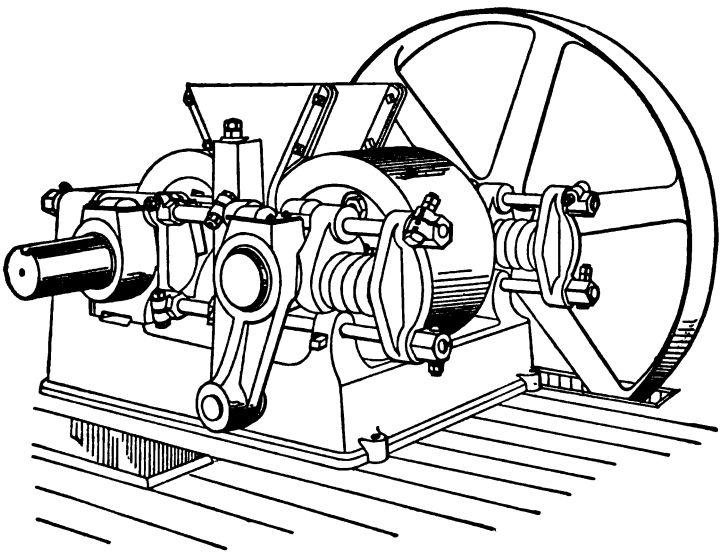

FIG. 49*c*.—GATES "ECONOMIC" ROLLS WITH ONE PULLEY REMOVED.

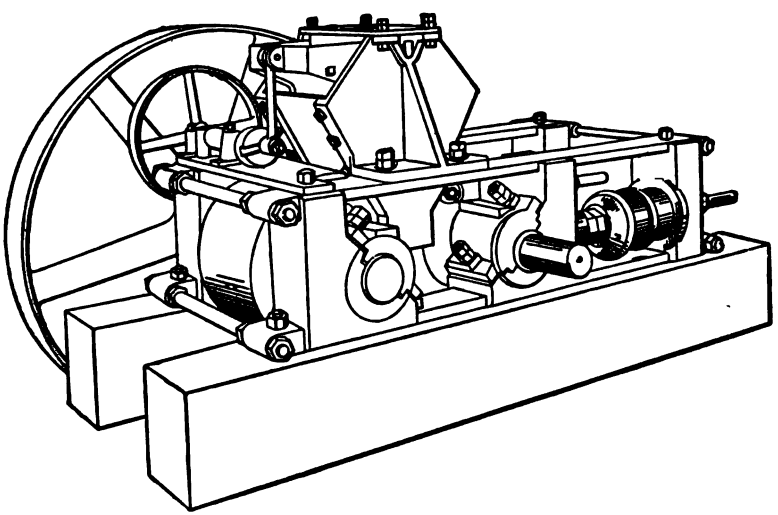

FIG. 49*d*.—GATES "SECTIONAL" ROLLS WITH FEEDER AND WITH ONE PULLEY REMOVED.

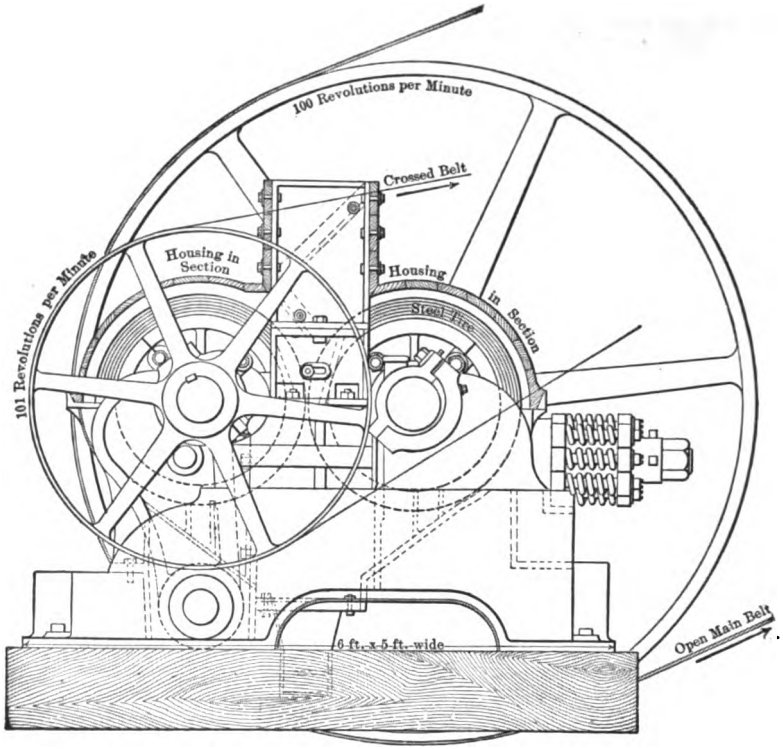

FIG. 50.—KROM'S BELTED ROLLS.

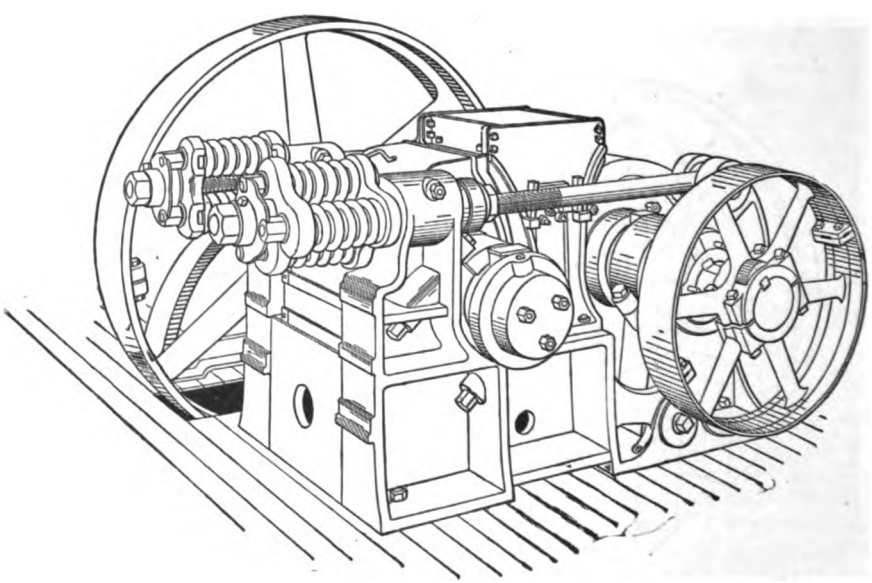

FIG. 51.—THE ALLIS RELIANCE CRUSHING ROLLS.

In summing up the geared and belted rolls the following points are worthy of note. Geared rolls have the advantage where slow speed is desired on account of the multiplication of force by the gears. Belted rolls would require extraordinarily wide belts or large pulleys to do the same work at slow speed. This quality of geared rolls, however, makes them more liable to break in case they are overfed. For high speed, belted rolls may have great advantage on account of their fewer moving parts and consequent less loss of power.

§ 88. Hoppers and Housing.—As before stated (see § 82) rolls need special feeders to limit quantity, to prevent choking by overfeeding, to keep up a sufficient rate of feeding, and also to regulate wear. The ore so fed is received in a hopper placed directly over the rolls to retain flying fragments. This hopper may or may not be a part of the housing. The replaceable ends of the hopper extended downward by the ends of the rolls form the cheek plates which prevent lumps of ore passing by uncrushed. These cheek plates are made adjustable, in a direction at right angles with the shafts to keep up with the wear of the roll shells. The distance between the cheek plates and the ends of the rolls should also be adjustable, although it is not generally made so.

A housing of cast or plate iron enclosing the rolls to retain the dust, is sometimes used and may be so complete as to deliver the crushed ore in a spout below. It is made so as to be easily removable. Housings with a door for oiling are also sometimes used to protect gears.

§ 89. Width of Face or Width of Rolls.—In deciding this matter several considerations are involved. Wide rolls of the same speed have more surface and hence greater capacity. But as the width and capacity increase, so also do the stresses to which the frame is subjected and which must be met by a greater first cost of the machine. With the increase in stresses and weight there is an increase in journal friction. On the other hand narrow rolls are much easier to keep true, and by running them faster, provided the speed does not exceed the limit for good work, the capacity lost by narrowing can be regained; the stresses are less and the first cost, weight and friction are reduced. The experience in Mill 20 leads the manager to conclude that 10-inch rolls crush as much as 14-inch and wear much smoother. In this case the ore probably covered the whole width of the roll more evenly and a greater pressure per square inch was probably exerted.

The widths in common use in this country are shown in Table 43, which covers the different mills visited. The classes are those defined in § 72. For the widths of rolls in each mill the reader is referred to Table 34.

TABLE 43.—SUMMARY OF WIDTHS OF ROLLS.

Width. Inches.	Number in Class I.	Number in Class II.	Number in Class III.	Number in Class IV.	Sum.
18	2	0	1	1	4
16	6	5	3	8	22
15	3	1	1	9	14
14	14	5	6	14	39
12	2	3	4	5	14
10	0	0	2	3	5
9	0	0	0	1	1

§ 90. Diameter of Rolls.—Rolls are used of diameters varying from 9 inches up to 42 inches (see Table 34). Rolls of large diameter apparently possess three advantages over those of small diameter: (1) The increased surface allows more rock to be crushed with a single pair of shells, but the gain is not important unless the renewals in the case of the smaller rolls are so frequent as to cause serious delay and added cost. The wear of shells per ton crushed would probably

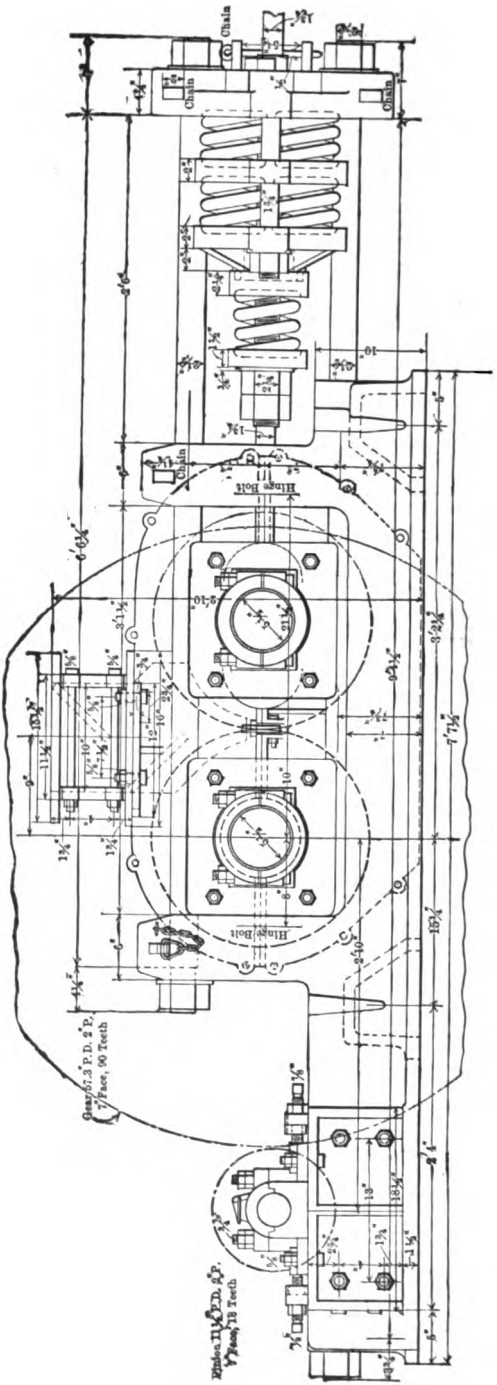

FIG. 52a.—ELEVATION OF VEZIN'S 20×12-INCH ROLLS MADE BY THE COLORADO IRON WORKS.

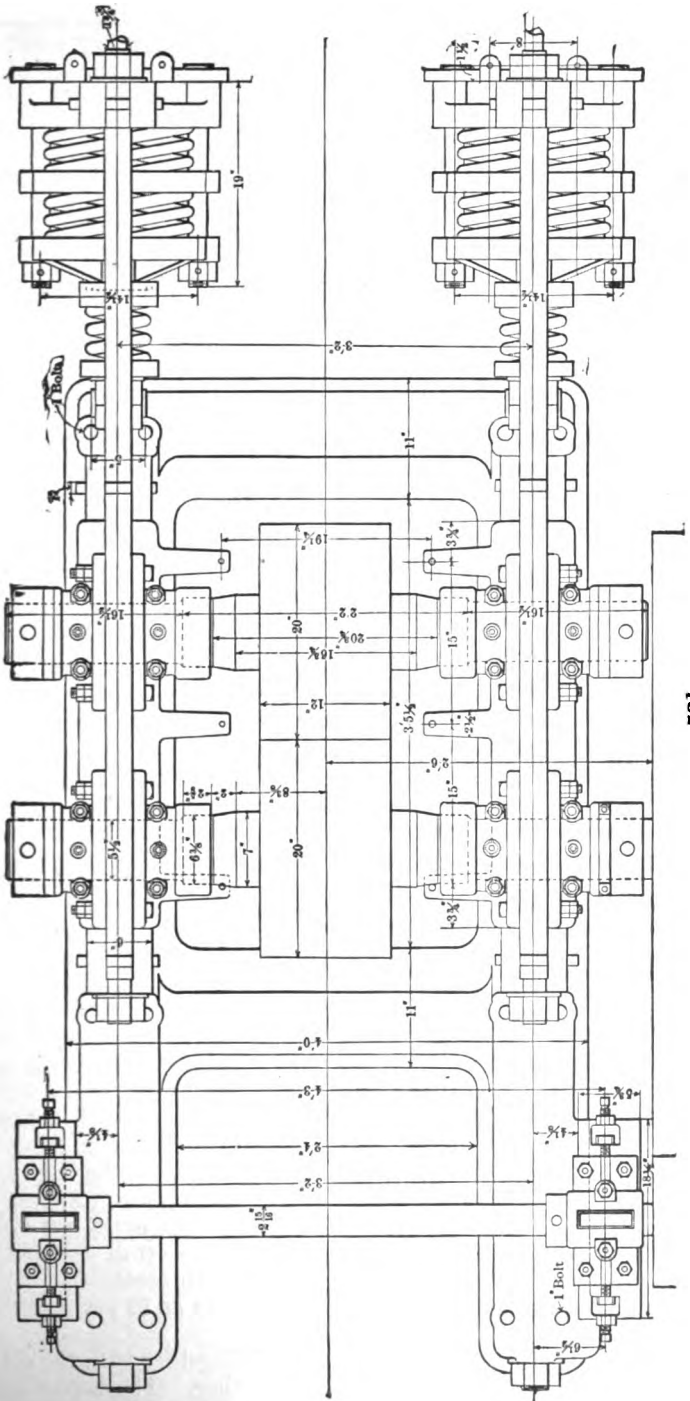

FIG. 52b. PLAN.

be the same in both cases. (2) The larger rolls can make a greater reduction in size of lump with one passage of ore through the rolls than the smaller, the angle of nip, which will be explained later, and the periphery speed being the same in both cases. But since the larger rolls cost more on account of the larger parts and the greater strength required for the additional pressure, we may say in favor of small rolls that two pairs of them in series can make the same reduction as one pair of larger rolls with less first cost and much less sliming of the ore. Besides this the smaller rolls are more easily run and handled, the shells are more easily and securely centered and they wear more evenly. The journal friction and the power will probably be the same in both cases. (3) Larger rolls have a greater capacity than smaller rolls, the reduction being the same, since they can be run at a higher rate of speed on account of their more advantageous angle of nip. In case both the reduction and periphery speed are the same for the large and small rolls, then the former will make the reduction more gradually and hence with less shock.

The diameters of rolls used in the mills visited are shown in Table 44 in their respective classes of § 72.

TABLE 44.—SUMMARY OF DIAMETERS OF ROLLS.

Diameter. Inches.	Number in Class I.	Number in Class II.	Number in Class III.	Number in Class IV.	Sum.
42	0	0	0	1	1
36	5	2	2	2	11
31	1	0	0	0	1
30	8	2	5	17	32
28	0	1	0	0	1
27	4	0	2	1	7
26	1	3	0	7	11
24	2	3	5	3	13
22	1	1	0	2	4
21	2	1	1	0	4
20	0	2	2	5	9
18	1	0	0	2	3
16	0	0	0	1	1
12	1	0	0	0	1

One large manufacturer of rolls places 24×14 inches, another places 26×14 or 16 inches as the best standard roll. An argument against excessively large rolls may be based upon the facts given in Table 52, which shows that large rolls have, in the majority of cases, a more favorable angle of nip than is necessary.

§ 91. Periphery Speed.—By reference to Table 34, it will be seen that for coarse rolls the revolutions per minute vary from 8½ to 100, and for fine rolls from 24 to 130. From these widely diverging figures obtained from practice it is clear that no law for revolutions is as yet developed. Moreover a moment's thought upon the subject brings out the fact that speed of revolution is not as good a criterion for comparison as periphery speed, for a roll 10 inches in diameter, making 90 revolutions, and a roll 30 inches in diameter, making 30 revolutions per minute, vary greatly in number of revolutions, yet the length of surface acting is the same in either case, viz.: 235.5 feet per minute. Again, considered from a mathematical standpoint, the same pair of rolls must run twice as fast to crush ½-inch cubes down to ¼ inch as they must to crush 1-inch cubes down to ½ inch, the amount crushed being the same in both cases.

Table 45 contains the opinions of different authors as to periphery speed, and Table 46 those of manufacturers.

Table 47 contains the size and periphery speed, together with the class of rolls, of the different rolls in mills visited by the author. The reader will find in Table 34 the sizes of ore crushed, which will be of assistance in comparing these

TABLE 45.—PERIPHERY SPEED OF ROLLS GIVEN BY AUTHORS.

	Diameter. Meters.	Revolutions per Minute.	Periphery Speed. Feet per Minute.
Rittinger	.....	.....	60 to 180
Davies (Germany)	.....	.....	90 to 180
Davies (France)	.....	.....	160
Sahlin	.....	.....	600 to 700
Gaetzschmann	1	.....	197
	½	.....	98
Kunhardt (Europe)	0·6	28	179
	0·8	12	99
Linkenbach	.....	.....	394
			492

TABLE 46.—PERIPHERY SPEED OF ROLLS GIVEN BY MANUFACTURERS.

	Diameter. Inches.	Design.	Periphery Speed. Feet per Minute.
Colorado Iron Works	20	.....	210
	40	.....	525
S. R. Krom	.....	.....	252 to 314
Gates Iron Works	.....	.....	900
Fraser & Chalmers	.....	Coarse rolls.	200
		Fine rolls.	300
Stearns-Roger Manufacturing Co.	.....	Belted.	335 to 457
		Geared.	167 to 188
Farrel Foundry and Machine Co	.....	.....	864 to 1,200
F. M. Davis Iron Works	.....	Belted.	335 to 471
		Geared.	188 to 197
Jackson	.....	Geared.	314 to 353

TABLE 47.—REVOLUTIONS AND PERIPHERY SPEED OF ROLLS.

Abbreviations.—Aver.=average; Ft.=feet; Min.=minute; No.=number; Per.=periphery.

CLASS I.					CLASS II.					CLASS III.					CLASS IV.				
Mill No.	Roll No.	Size. Inches.	Revolutions per Minute.	Per. speed. Ft. per Min.	Mill No.	Roll No.	Size. Inches.	Revolutions per Minute.	Per. speed. Ft. per Min.	Mill No.	Roll No.	Size. Inches.	Revolutions per Minute.	Per. speed. Ft. per Min.	Mill No.	Roll No.	Size. Inches.	Revolutions per Minute.	Per. speed. Ft. per Min.
3	1	12x14	100	314	10	1	22x14	22	127	20	2	24x12	100	628	10	2	18x14	22	104
15	1	25x14	42	242	12	1	26x12	20	136	21	2	24x14	80	503	16	1	18x14	75	353
16	1	18x14	75	353	17	1	20x14	90	471	22	2	30x16	40	314	17	1	20x14	90	471
21	1	27x14	80	565	18	1	36x14	45	424	23	2	27x14	100	706	20	3	16x9	120	503
22	1	30x16	28	220	20	1	24x12	92	578	24	2	30x12	24	188	22	2	30x16	40	314
23	1	27x14	100	706	24	1	28½x12	24	179	26	2	36x16	50	471	23	2	27x14	100	706
25	1	30x14	8½	67	27	1	36x14	42	396	27	2	21x16	40	220	24	2	30x12	24	188
26	1	36x16	42	396	28	1	26x14	40	272	28	2	24x14	26	163	25	2	30x14	60	471
26	2	36x16	42	396	33	1	30x16	24½	192	41	2	30x15	24	188	27	2	36x14	100	942
29	1	21x12	45	247	37	1	26x15	40	272	86	2	20x10	30	157	28	1	26x14	40	272
30	1	36x14	40	377	92	1	30x15	34	350	87	2	36x14	37½	353	28	2	30x16	35	275
31	1	36x18	40	377	92	2	24x16	130	817	89	2	30x18	100	942	30	3	30x16	30	236
32	1	31x16	28	227	92	3	24x16	130	817	90	2	18x12	130	613	30	4	24x14	35	211
34	1	30x14	48	377					Aver. 387	93	2	24x12	30	188	31	2	24x12	36	226
35	1	26x15	62	422										Aver. 402.5	32	2	36x14	55	519
40	1	30x16	31	243											32	3	30x14	60	471
40	3	30x16	31	243											32	4	30x14	60	471
41	1	30x15	16	126											33	2	20x10	42	220
86	1	27x14	22	156											37	2	26x15	47	272
87	1	36x14	40	377											37	3	20x12	42	220
88	1	27x14	40	283											37	4	42x12	37	407
89	1	30x18	90	707											38	1	26x15	60	408
90	1	24x14	100	628											38	2	26x15	60	408
93	1	30x14	25	196											38	3	26x15	60	408
															39	1	30x16	38	298
				Aver. 345.7											39	2	26x15	40	272
															40	2	30x16	31	243
															40	4	30x16	60	471
															42	1	22x16	50	288
															43	1	30x16	60	471
															89	3	30x18	100	942
																			Aver. 389.1

figures. It is clear that averages taken from such widely diverging figures can be of little value, although the table shows that, as a general rule, fine rolls have a greater speed than coarse rolls. The reason for this is that where the ore is coarse and the feed is more or less uneven, the rolls jump more and there are greater strains produced, so that they cannot be run so fast as rolls treating fine material evenly fed. The average speed of all the rolls is 379.2 feet per minute.

For practical use, Table 48 has been prepared, showing the number of revolutions per minute that rolls of different diameter must have to produce different periphery speeds.

TABLE 48.—REVOLUTIONS REQUIRED FOR VARYING PERIPHERY SPEEDS.

Diameter of Rolls in Inches.	Periphery Speed in feet per Minute.											
	50	100	150	200	300	400	500	600	700	800	900	1000
	Number of Revolutions per Minute.											
9	21	42	64	85	127	170	212	255	297	340	382	424
16	12	24	36	48	72	96	119	143	167	191	215	239
20	10	19	29	38	57	76	96	115	134	153	172	191
24	8	16	24	32	48	64	80	96	111	127	143	159
26	7	15	22	29	44	59	74	88	103	118	132	147
30	6	13	19	26	38	51	64	76	89	102	115	127
36	5	11	16	21	32	42	53	64	74	85	95	106
42	5	9	14	.18	27	36	45	55	64	73	82	91

There seems to be a tendency in some quarters toward high speed rolls. Another argument for this, in addition to those which have been brought out in the preceding sections, is that high speed rolls are much smoother running, owing to their greater inertia which at the instant the lump is nipped supplies more or less force to aid in the crushing. How great this force is may be understood by considering it equivalent to the force necessary to move the mass of one roll away from another a very short distance in an extremely small fraction of a second. No data is at hand to compute this force, but under certain conditions it may become very considerable (thousands of pounds) where the speed is high and the lump yields with difficulty. This force is entirely supplementary to that exerted by the springs and it varies as the square of the periphery speed of the rolls, other things being equal.

Some authorities advocate running one of the rolls slightly faster than the other in order to prevent the exact mating of the rolls and consequent possible unevenness of wear resulting therefrom. This is especially true with geared rolls. The E. P. Allis (Reliance) rolls are geared differentially 1 in 50, which is reported to work advantageously on gears and rolls. S. R. Krom's belted rolls (see Fig. 50) drive the small pulley 1 in 100 faster than the large pulley. This is probably intended to prevent the former from lagging behind. The use of any considerable differentiation of this kind to produce grinding, with a view of increasing the crushing power, has been proved fallacious on hard brittle ores, requiring increased power without corresponding benefit.[79] In regard to soft clayey ores, however, the case is different. S. I. Hallet, of Aspen, Colo., reports a special case of rolls used in a sampler which had run 33 months and crushed 82,000 tons. They were fed with 2-inch lumps from a breaker and crushed to 1 inch. The shells were soft steel and were never trued up and were in fair shape at the time of reporting. One roll runs 25% faster than the other. The ore which is soft, being largely composed of limestone and clay, when crushed by ordinary rolls, forms ribbons or "pancakes," while the above differential adjustment tears the ore apart, completely overcoming the difficulty. The differentia-

tion was found to be almost absolutely necessary, as it saved a great deal of labor afterward. The wear of the roll shells was slightly increased.

§ 92. SPACE BETWEEN ROLLS AND ANGLE OF NIP.—Spaces vary from rolls close together or practically no space, up to ¾ inch apart (see Table 34). The relation between the diameter of ore fed to rolls and the space between them, that is to say the amount of reduction, is most important if rolls are to do their best work. A common rule for coarse rolls is that the space should be one-half

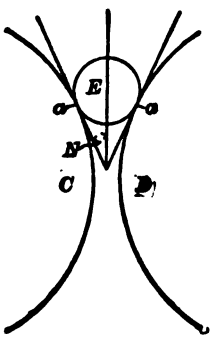

FIG. 53.—ANGLE OF NIP.

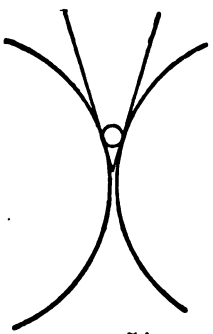

FIG. 54.

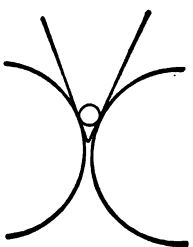

FIG. 55.

the diameter of the maximum lump fed. This, however, is an imperfect rule, as it does not include the consideration of the angle of nip.

Angle of Nip.—If rolls *C, D,* (see Fig. 53) be fed with a sphere of rock *E* the tangents to the rolls at *aa,* the points of contact with the sphere, meet below, forming an angle, $2N$, the half of which, N, is called the angle of nip.

This angle may have values from 0°, where the space between the rolls is as large as the feed lump, increasing upward until the angle is so large that the rolls cannot nip the fragments. This angle of nip in any case will depend

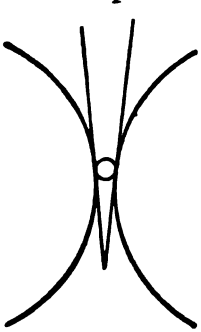

FIG. 56.

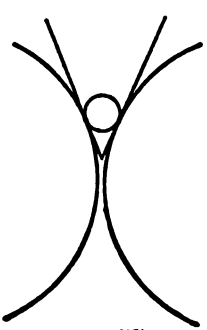

FIG. 57.

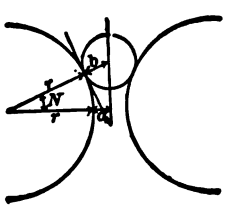

FIG. 58.

for its value upon the diameter of the rolls, the diameter of the lump of ore fed and the distance apart to which the rolls are set, and it is affected in the following ways: It is diminished by increasing the diameter of the rolls, by increasing the space between the rolls, and by diminishing the size of the lumps fed to the rolls. Figs. 54 and 55 show that the larger rolls, acting on a given sphere, have smaller angles of nip. Figs. 54 and 56 show that larger spaces give smaller angles of nip. Figs. 54 and 57 show that smaller feed lumps give a smaller angle of nip.

All relations between size of feed, space between rolls, radius of rolls and angle of nip can be expressed by a simple formula, which is derived as follows (see Fig. 58): If b=radius of sphere to be crushed, $a=\frac{1}{2}$ space between rolls, N=angle of nip and r=radius of roll$=\frac{1}{2}$ diameter, then $\frac{r+a}{r+b}$=Cosine N.

There are two values of this angle of nip which are of special interest to the ore-dresser, namely, when it equals the angle of friction and the rolls do no work; and the practical angle of nip, at which rolls will work satisfactorily. The angle N becomes the angle of friction when it is of such a value that a sphere

TABLE 49.—SPACE BETWEEN ROLLS AND ANGLE OF NIP.

Abbreviations.—Deg.=degree; Min.=minute; No.=number; Tr.=trommel.

CLASS I.

Mill No.	Roll No.	Feed Size. Inches.	Space. Inches.	Size of Limiting Trommel. Inches.	Ratio of Feed to Space.	Ratio of Feed to Tr. Hole.	Ratio of Tr. Hole to Roll Space.	Angle of Nip. Deg.	Angle of Nip. Min.
15	1	1-0 (25.4-0 mm.)	¾ (19.1 mm.)	0.487 (12.4 mm.)	1.25	2.0	0.64	8	27
16	1	0.787-0.079 (20-2 mm.)	Close.	1.18 (30 mm.)	.....	0.7	.....	16	39
21	1	1-0 (25.4-0 mm.)	¼ (6.35 mm.)	0.167 (4.25 mm.)	4	6.0	0.67	13	17
22	1	1-0 (25.4-0 mm.)	0.4 (10.2 mm.)	0.472 (12 mm.)	2½	2.1	1.18	11	17
23	1	1½-0 (38.1-0 mm.)		0.276 (7 mm.)	.....	5.4	.....	.....	.....
25	1	1½-0 (38.1-0 mm.)	Close.	0.236 (6 mm.)	.....	6.3	.....	17	45
26	1	1-0 (25.4-0 mm.)	⅛-3/16 (3.18-4.76 mm.)	0.224 (5.70 mm.)	8-5½	4.5	1.8-1.2	12 29-12 2	
26	2	1-0 (25.4-0 mm.)	⅛-3/16 (3.18-4.76 mm.)	0.224 (5.70 mm.)	8-5½	4.5	1.8-1.2	12 29-12 2	
29	1	0.669-0 (17-0 mm.)	½ (12.7 mm.)	0.315 (8 mm.)	1.33	2.1	0.63	7	10
30	1	2½-0 (63.5-0 mm.)	½ (12.7 mm.)	0.98 (25 mm.)	5	2.5	2.0	18	33
31	1	1½-0 (38.1-0 mm.)	½ (12.7 mm.)	0.709 (18 mm.)	3	2.1	1.4	13	16
32	1	1½-0 (38.1-0 mm.)	⅛ (3.18 mm.)	0.472 (12 mm.)	12	3.2	3.8	16	44
35	1	1-0 (25.4-0 mm.)	½ (12.7 mm.)	0.630 (16 mm.)	2	1.6	1.26	11	16
40	1	1-0 (25.4-0 mm.)	⅛ (3.18 mm.)	0.787 (20 mm.)	8	1.3	6.29	13	39
40	3	1-0 (25.4-0 mm.)	⅛-3.18 mm.)	0.787 (20 mm.)	8	1.3	6.29	13	39
86	1	1-0.224 (25.4-1.52 mm.)	½ (12.7 mm.)	0.244 (5.54 mm.)	2	4.6	0.45	10	51
87	1	1½-0 (38.1-0 mm.)	¼ (6.35 mm.)	4 mesh.	6	.....	.....	14	51
88	1	1½-0 (38.1-0 mm.)	½ (12.7 mm.)	3 mesh.	3	.....	.....	15	50
89	1	1-0 (25.4-0 mm.)	Close.	1/12 (2.11 mm.)	.....	12.0	.....	14	35
90	1	¾-0 (19.1-0 mm.)	½-¾ (12.7-19.1 mm.)	Goes to No. 2 rolls.	1½-1	.....	.....	8	9-0
93	1	1½-0 (38.1-0 mm.)	1¼ (31.8 mm.)	Goes to log washer.	1.2	.....	.....	7	13

CLASS II.

10	1	¾-½ (19.1-12.7 mm.)	½ (12.7 mm.)	½ (12.7 mm.)	1.5	1.5	1	8	9
12	1	1 (25.4 mm.)-4 mesh.	Close.	2 mesh.	.....	.....	.....	15	39
17	1	0.591-0 (15-0 mm.)	Close.	0.591 (15 mm.)	.....	1.0	.....	13	59
18	1	1½-0.141 (38.1-3.58 mm.)	¼ (6.35 mm.)	0.083 (2.11 mm.)	6	18.0	0.33	14	51
20	1	1½-¼ (38.1-6.4 mm.)	½ (12.7 mm.)	0.252 (6.4 mm.)	3	6.0	0.5	16	5
24	1	½-0.394 (12.7-10 mm.)	⅛-½ (3.5-12.7 mm.)	0.276 (7 mm.)	1½-1	1.8	0.55-0.82	6	9-0
27	1	(a)	½ (12.7 mm.)	⅝ (15.85 mm.)	3	2.4	1.25	13	16
28	1	1¼-0.630 (31.75-16 mm.)	⅛ (3.18 mm.)	0.630 (16 mm.)	10	2.0	5.03	24	5
29	3	0.315-0.236 (8-6 mm.)	Close.	0.236 (6 mm.)	.....	1.3	.....	20	13
92	1	¾-0.102 (19.1-2.59 mm.)	Close.	0.060 (1.53 mm.)	.....	12.5	.....	14	41
92	2	0.102-0.060 (2.59-1.53 mm.)	Close.	0.058 (1.47 mm.)	.....	1.8	.....	5	17
92	3	0.102-0.058 (2.59-1.47 mm.)	Close.	0.058 (1.47 mm.)	.....	1.8	.....	5	17

(a) This is through a Blake breaker set at 1½ inches (38.1 mm.) and on a trommel with 1½ inches.

CLASS III.

20	2	1½-0.252 (38.1-6.4 mm.)	¼ (6.35 mm.)	0.252 (6.4 mm.)	6	6.0	1.008	18	1
21	2	1-0.167 (25.4-4.25 mm.)	Close.	0.167 (4.25 mm.)	.....	6.0	.....	16	57
22	2	1-0 (25.4-0 mm.)	Close.	0.472 (12 mm.)	.....	2.1	.....	11	36
23	2	1½-0 (38.1-0 mm.)	Close.	0.276 (7 mm.)	.....	5.4	.....	18	40
24	2	½-0 (12.7-0 mm.)	¼-3/16 (6.35-4.76 mm.)	0.276 (7 mm.)	2-2⅜	1.8	1.1-1.47	7 21-8	13
26	3	1-0.224 (25.4-5.7 mm.)	Close.	0.224 (5.7 mm.)	.....	4.5	.....	13	21
29	2	0.669-0.315 (17-8 mm.)	¼ (6.35 mm.)	0.315 (8 mm.)	2.7	2.1	1.26	8	2
30	2	2½-0.984 (63.5-25 mm.)	½ (12.7 mm.)	0.984 (25 mm.)	5	2.5	2	22	24
86	2	1½-0.224 (38.1-5.54 mm.)	Close.	0.224 (5.54 mm.)	.....	6.9	.....	21	32
87	2	1½ (38.1 mm.)-4 mesh.	Close.	4 mesh.	.....	.....	.....	16	15
88	2	1½ (38.1 mm.)-3 mesh.	Close.	3 mesh.	.....	.....	.....	18	40
89	2	¾-1/12 (19.1-2.11 mm.)	Close.	1/12 (2.11 mm.)	.....	9.1	.....	12	31
90	2	¾-0 (19.1-0 mm.)	Close.	¼(6.35mm.)-20 mesh	.....	3	.....	16	15
93	2	1½-0.229 (38.1-6 mm.)	¼ (6.35 mm.)	0.229 (6 mm.)	6	6.3	0.94	18	1

TABLE 49.—SPACE BETWEEN ROLLS AND ANGLE OF NIP.—*Concluded.*

CLASS IV.

Mill No.	Roll No.	Feed Size. Inches.	Space. Inches.	Size of Limiting Trommel. Inches.	Ratio of Feed to Space.	Ratio of Feed to Tr. Hole.	Ratio of Tr. Hole to Roll Space.	Angle of Nip. Deg.	Angle of Nip. Min.
10	2	½-0 (12.7-0 mm.)	Close.	½ (12.7 mm.)	.....	1.0	.....	13	21
15	2	1-0.09 (25.4-2.28 mm.)	Close.	0.487 (12.4 mm.)	.....	2.0	.....	16	57
16	1	0.787-0 (20-0 mm.)	Close.	1.18 (30 mm.)	.....	0.66	.....	16	39
17	1	0.591-0 (15-0 mm.)	Close.	0.591 (15 mm.)	.....	1.0	.....	13	59
20	3	0.252-0.060 (6.4-1.52 mm.)	Close.	0.060 (1.52 mm.)	.....	4.2	.....	10	6
22	2	1-0 (25.4-0 mm.)	Close.	0.472 (12 mm.)	.....	2.1	.....	14	36
23	2	1½-0 (38.1-0 mm.)	Close.	0.276 (7 mm.)	.....	5.4	.....	18	40
24	2	½-0 (12.7-0 mm.)	¼-$\frac{3}{16}$ (6.35-4.76 mm.)	0.276 (7 mm.)	2-2⅔	1.8	1.-1.47	7 21-8	13
25	2	0.236-0 (6-0 mm.)	Close.	To jigs.	.....	.....	.....	7	20
27	2	⅝-$\frac{21}{64}$ (15.9-8.35 mm.)	⅛ (3.17 mm.)	$\frac{21}{64}$ (8.35 mm.)	5	1.9	2.62	9	29
28	1	1¼-0.630 (31.75-16 mm.)	Close.	0.630 (16 mm.)	.....	2.0	.....	24	5
28	2	0.630-0.138 (16-3½ mm.)	Close.	0.138 (3½ mm.)	.....	4.6	.....	11	38
30	3	0.984-0.276 (25-7 mm.)	Close.	(*a*) (*d*)	.....	1.0	.....	14	29
30	4	0.276-0 (7-0 mm.)	Close.	(*b*) (*d*)	.....	1.4	.....	8	39
31	2	1½-0.158 (38.1-4 mm.)	¼ (6.35 mm.)	(*c*) (*d*)	6	2.1	2.8	18	1
31	3	0.158-0 (4-0 mm.)	Close.	0.098 (2½ mm.)	.....	1.6	.....	6	33
32	2	1½-0.315 (38.1-8 mm.)	Close.	0.315,0.197(8,5mm.)*d*	.....	4.7	.....	16	15
32	3	0.315-0.197 (8-5 mm.)	Close.	0.315,0.197(8,5mm.)*d*	.....	1.0	.....	8	16
32	4	0.197-0.079 (5-2 mm.)	Close.	0.315,0.197(8,5mm.)*d*	.....	0.6	.....	6	34
33	2	½-0 (12.7-0 mm.)	Close.	(*e*) (*d*)	.....	2.5	.....	13	41
35	2	0.984 (25 mm.) to sand.	Close.	0.098 (2½ mm.)	.....	10.0	.....	15	31
38	1	1½-⅞ (38.1-22.25 mm.)	½ (12.7 mm.)	To No. 2 rolls.	3	.....	.....	13	11
38	2	1½-0 (38.1-0 mm.)	¼ (6.35 mm.)	0.197 (5 mm.)	6	7.6	0.79	17	20
38	3	⅜-0.098 (9.51-2.5 mm.)	Close.	0.098 (2½ mm.)	.....	3.8	.....	9	40
39	1	1½-0.591 (38.1-15 mm.)	$\frac{3}{16}$ (4.76 mm.)	(*f*) (*d*)	8	1.0	8	16	33
39	2	0.591-0.335 (15-8½ mm.)	Close.	(*f*) (*d*)	.....	0.4	.....	11	17
40	2	0.787-0.276 (20-7 mm.)	$\frac{1}{16}$ (1.59 mm.)	0.787 (20 mm.)	12.5	1.0	12.5	12	48
40	4	0.276-0 (7-0 mm.)	Close.	0.118 (3 mm.)	.....	2.3	.....	7	44
42	1	¼-0 (6.35-0 mm.)	Close.	0.1 (2.54 mm.)	.....	2.5	.....	8	36
43	1	1-0.118 (25.4-3 mm.)	Close.	0.118 (3 mm.)	.....	8.5	.....	14	36
89	3	$\frac{1}{12}$-0 (2.11-0 mm.	Close.	$\frac{1}{12}$ (2.11 mm.)	.....	1.0	.....	4	16

(*a*) 0.984, 0.591, 0.394 (25, 15, 10 mm.). (*b*) 0.197, 0.098 (5, 2½ mm.). (*c*) 0.709, 0.591, 0.158 (18, 15, 4 mm.). (*d*) This trommel is sectional. (*e*) 0.2, 0.13 (5.08, 3.30 mm.). (*f*) 1½, 0.591 (38.1, 15 mm.).

fed to the rolls will just slip upon the points of contact and therefore fail to be crushed.

Table 49 shows the spaces and the angles of nip used by the rolls in the mills visited by the author, the rolls being divided into classes according to § 72.

A study of the figures given in the table shows angles of nip ranging from 4° 16′, up to 24° 5′, with an average of about 13° 30′. The rolls having the lower values undoubtedly have more favorable angles of nip than is necessary. The rolls having the higher values are able to work probably through some favorable condition of the minerals referred to below. Between these extremes there must be some standard angle of nip which can be referred to as safe for average conditions. Practically the size fed to the first coarse rolls, that is to say, the rolls fed by the rock breaker, is pretty well settled by the practice in the mills to be 1½ inches (38.1 mm.) diameter, although this may not be theoretically the best size; there are then left the two variables, namely, the diameter of the rolls and the space between them. Throwing out the larger values of those rolls which work under very favorable conditions, we may assume that the angle of nip of rolls, 24 inches in diameter when set at ½ inch apart and crushing 1½-inch lumps, is the standard maximum safe angle. And then by making tables we can see under what conditions the different sizes of rolls can realize this angle and to what extent under other conditions they will differ from it. This angle is practically 16° (actually 16° 12′).

To exhibit the relations between the diameter of rolls, the size of feed and the space between the rolls, when the angle of nip is 16°, Tables 50 and 51 have been constructed. Table 50, for different spaces, gives the size of feed that will give

16°. It shows, for example, that 24-inch rolls set with ½-inch space should be fed with lumps whose maximum size is not larger than 1.48 inches in diameter in order to get an angle of nip not larger than 16°.

TABLE 50.—SIZES OF FEED WHICH WILL GIVE AN ANGLE OF NIP OF 16° ON DIFFERENT ROLLS.

Diameter of Rolls in Inches.	Space Between the Rolls in Inches.						
	¾	⅝	½	⅜	¼	⅛	0
	The Size of Feed in Inches to the Rolls will be						
36	2.23	2.10	1.96	1.84	1.71	1.57	1.45
30	1.99	1.86	1.73	1.60	1.47	1.34	1.21
26	1.83	1.70	1.56	1.44	1.31	1.17	1.05
24	1.74	1.61	1.48	1.36	1.22	1.10	0.96
20	1.58	1.46	1.32	1.20	1.06	0.94	0.80
16	1.42	1.29	1.16	1.03	0.90	0.77	0.64
9	1.14	1.01	0.88	0.75	0.62	0.49	0.36

Table 51, for the different sizes of feed gives the spaces which will yield an angle of nip of 16°. It shows, for example, that 24-inch rolls, which are fed with 1½-inch lumps, should have a space as large as 0.512 inch between the rolls to get an angle of nip of not over 16°.

TABLE 51.—SPACES WHICH WILL GIVE AN ANGLE OF NIP OF 16° ON DIFFERENT ROLLS.

Diameter of Rolls in Inches.	Size of Feed to Rolls in Inches.					
	1⅜	1¼	1	¾	½	¼
	Space between Rolls. (a)					
36	.046	.....	.....	.....	.....	.....
30	.280	.088	.....	.....	.....	.....
26	.432	.191	.....	.....	.....	.....
24	.512	.270	.031	.....	.....	.....
20	.666	.424	.185	.....	.....	.....
16	.882	.580	.340	.101	.....	.....
9	1.198	.851	.613	.373	.132	.....

(a) Where blank spaces are left the angle of nip is less than 16° with the rolls set close together.

As previously stated, the mill man wishes to decide what reduction he can make with the rolls he has in his mill and at the same time keep the angle of nip within a favorable value. Table 52 has been prepared to enable him to make this decision at a glance.

For example, suppose his rolls are 26 inches in diameter (left column); if he wishes to reduce his feed lumps to one-fourth their size (first line), then 1¼-inch lumps (second line) will be the largest size that he can feed, which will yield an angle of nip below 16°, namely 15° 7′. From this table he will see, that if his rolls are 24 inches in diameter, he can crush from 1½-inch feed to ½-inch space and still have practically the favorable angle, namely 16° 6′; and that if his rolls are 16 inches diameter, he can crush from 1-inch feed down to ⅓-inch space and still be practically within the favorable angle, 16° 6′. The table further shows the amount of reduction the different rolls can effect at one passage of the ore; for example, 9-inch rolls cannot reduce 1½-inch lumps below 1⅓-inch space (angle of nip=15° 21′) without overstepping the safe angle of

nip, while 24-inch rolls can reduce 1½-inch lumps down to ½-inch space (angle of nip=16° 6′) and 36-inch rolls can reduce 1½-inch lumps down to $\frac{15}{16}$-inch space (angle of nip=15° 12′) without overstepping the safe angle of nip. The use of Table 52 for deciding questions of graded crushing is explained in § 99.

The angle of nip may be studied mathematically as follows:

Let E (see Fig. 59) be the lump of ore to be crushed. The elementary forces acting on E are R and T, which act normally and tangentially to the roll respec-

TABLE 52.—ANGLES OF NIP FOR VARIOUS SIZES OF FEED AND VARIOUS REDUCTIONS ON DIFFERENT ROLLS.

Diameter of Rolls.	Reduction or Ratio of Finish Size to Size Fed to the Rolls.																													
	¾										⅛										⅛									
	Sizes Fed to the Rolls, in Inches.																													
	1½		1¼		1		¾		½		¼		1½		1¼		1		¾		½		¼		1½		1¼		1	
	Space between the Rolls in Inches.																													
	1⅛		11/16		¾		9/16		⅜		5/16		¾		⅝		½		⅜		¼		⅛		½		9/16		⅛	
	Angles of Nip.																													
Inches.	Deg.	Min.	Deg.	Min.	Deg.	Min.	Deg.	Min.	Deg.	Min.	Deg.	Min.	Deg.	Min.	Deg.	Min.	Deg.	Min.	Deg.	Min.	Deg.	Min.	Deg.	Min.	Dg.	Min.	Deg.	Min.	Deg.	Min.
36	8	6	7	25	6	40	5	48	4	45	3	22	11	29	10	32	9	26	8	11	6	12	4	45	13	15	12	12	10	54
30	8	53	8	7	7	14	6	20	5	11	3	41	12	30	11	28	10	18	8	57	7	20	5	12	14	28	13	18	11	54
26	9	28	8	41	7	48	6	47	5	34	3	57	13	25	12	19	11	3	9	36	7	53	5	36	15	30	14	15	12	52
24	9	50	9	1	8	6	7	3	5	48	4	7	13	56	12	48	11	29	9	59	8	11	5	42	16	6	14	48	13	15
20	10	43	9	50	8	51	7	43	6	20	4	30	15	10	13	57	12	31	10	54	8	57	6	26	17	37	16	8	14	28
16	11	53	10	55	9	50	8	34	7	5	5	2	16	50	15	29	13	56	12	9	9	59	7	7	19	29	17	53	16	6
9	15	21	14	11	12	50	11	15	9	18	6	40	21	47	20	8	18	12	15	56	13	10	9	26	25	12	23	16	21	2

Diameter of Rolls.	Reduction or Ratio of Finish Size to Size Fed to the Rolls.																													
	⅛						¼												⅛											
	Sizes Fed to the Rolls in Inches.																													
	¾		½		¼		1½		1¼		1		¾		½		¼		1½		1¼		1		¾		½		¼	
	Space between the Rolls in Inches.																													
	¼		3/8		5/16		⅜		5/16		¼		3/16		⅛		3/16		5/16		¼		3/16		⅛		3/16		3/16	
	Angles of Nip.																													
Inches.	Deg.	Min.	Deg.	Min.	Deg.	Min.	Deg.	Min.	Deg.	Min.	Deg.	Min.	Deg.	Min.	Deg.	Min.	Deg.	Min.	Deg.	Min.	Deg.	Min.	Deg.	Min.	Deg.	Min.	Deg.	Min.	Deg.	Min.
36	9	31	7	46	5	30	14	4	12	56	11	33	10	6	8	13	5	50	15	12	13	58	12	29	10	53	8	53	6	18
30	10	24	8	29	6	2	15	21	14	7	12	38	11	2	9	0	6	23	16	36	15	14	13	39	11	54	9	43	6	54
26	11	11	9	6	6	27	16	27	15	7	13	32	11	49	9	39	6	51	17	46	16	19	14	37	12	46	10	25	7	24
24	11	35	9	28	6	43	17	5	15	42	14	4	12	15	9	53	7	8	18	28	16	57	15	10	13	15	10	51	7	42
20	12	36	10	24	7	21	18	37	17	7	15	21	13	24	11	2	7	48	20	7	18	30	16	37	14	29	11	51	8	26
16	14	2	11	32	8	13	20	40	18	0	17	5	14	52	12	14	8	32	23	20	20	32	18	28	16	4	13	13	9	24
9	18	28	15	14	10	53	26	46	24	43	22	20	19	35	16	9	11	33	28	57	26	45	24	9	21	8	17	27	12	29

tively. The force T will be a certain part of R depending upon the coefficient of friction. Assuming the latter to be 0.3,* then $T=0.3\ R$.

Resolving each force into vertical and horizontal components we get

$$e=R \text{ cosine } N.$$
$$f=R \text{ sine } N.$$
$$c=0.3\ R \text{ cosine } N.$$
$$d=0.3\ R \text{ sine } N.$$

The forces e and d simply compress the lump, being equal and opposite to the

* Kent, p. 999, gives stone on iron as 0.3 to 0.7.

horizontal components of the forces exerted by the other roll. The force f tends to move the lump up, while c tends to force it down.

If $N=5°$ and $R=100$ pounds, then $f=R$ sine $N=8.7$ pounds, and $c=0.3$ R cosine $N=29.7$ pounds, and the lump will go down. The action of the other roll is to double these forces f and c, so that the total force acting upward is 17.4 pounds and the total force downward is 59.4 pounds.

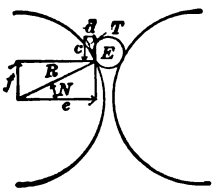

FIG. 59.

If $N=15°$ and $R=100$ pounds, then $f=R$ sine $N=25.8$ pounds, and $c=0.3$ R cosine $N=28.8$ pounds, and the lump will still go down.

If $N=16°$ 30′ and $R=100$ pounds, then $f=R$ sine $N=28.4$ pounds, and $c=0.3$ R cosine $N=28.5$ pounds, and the lump will be almost in equilibrium.

If $N=20°$ and $R=100$ pounds, then $f=R$ sine $N=34.20$ pounds, $c=0.3$ R cosine $N=28.19$ pounds, and then the lump will fly out.

If the coefficient of friction is larger than 0.3 then the angle at which the lump is in equilibrium will be greater. Thus, for a coefficient of friction of 0.7 the angle becomes 35°. Practically the coefficient would probably never even approach 0.7 in any case. The results of preceding calculations are arranged in tabular form in Table 53.

TABLE 53.—VALUE OF FORCES ACTING AT DIFFERENT ANGLES.

N.	*R.*	*f.*	2*f.*	*c.*	2*c.*	2*c.*–2*f.*	Motion of Lump.
Degrees.	Pounds.	Pounds.	Pounds.	Pounds.	Pounds.	Pounds.	
5	100	8.7	17.4	29.7	59.4	42.0	Down.
15	100	25.8	51.6	28.8	57.6	6.0	Down.
16½	100	28.4	56.8	28.5	57.0	0.2	Down.
20	100	34.2	68.40	28.19	56.38	—12.01	Up.

The different minerals vary greatly in their coefficient of friction, as follows: (1) Minerals that are tough and tenacious, as certain combinations of pyrite and siderite, require a narrower angle of nip than brittle minerals like calcite, barite and quartz, since with the latter there is a crumbling of small particles which "sand the track." (2) Minerals that are slippery, as frozen ore, graphite, anthracite and talc have a small coefficient of friction and therefore require a narrow angle of nip, while gritty rocks like sandstone have a high coefficient and can use a wide angle of nip. (3) When rolls are fed wet, adhering sand may increase the coefficient of friction and make a greater angle of nip possible than when the ore is fed dry and there is no adhering sand.

Rolls treat flat grains from a given sieve more favorably than they do the cube or sphere.

§ 93. RELATION OF SPEED TO ANGLE OF NIP.—Theoretically, increase of speed, provided the reduction in size is little enough, can be made to almost any extent, but practically, high speed with much reduction will give trouble, owing to the refusal of the rolls to nip the lumps. The latter fly back until a dangerous amount collects and then the rolls choke.

This may be explained as follows: A lump of ore falling under the influence of gravity from heights of 6, 12, 18 and 24 inches will have final velocities of 340, 481, 589, and 681 feet per minute respectively. Now if the rolls are revolving at 900 feet per minute periphery speed, then a certain part of the friction must be used to accelerate the lump of ore to this speed before it will be nipped. This amount will be greater or less according as the periphery speed of the roll exceeds the velocity of the particle by much or little. This use of a part of the friction for the purpose of accelerating the particle does not in itself prevent the

particle from being finally nipped but merely delays the nipping. It is this delay during the time necessary for accelerating the particle, which prevents the nipping, for until accelerated to the speed of the rolls, the particle is necessarily slipping and this slipping smooths the particle to a certain extent which causes the coefficient of friction to be reduced and thereby prevents the particle from going through.

To further illustrate how reducing the periphery speed raises the practical angle of nip and prevents slipping, the author cites the following experiences in three different mills:

The Chicago & Aurora Smelting and Refining Co., for crushing matte, uses belted rolls 24×14 inches. The feed lumps are 1¼ to 1¾ inches in size and the matte comes in two forms, weathered and unweathered; the latter has probably at least four times as many of the large lumps in it as has the former. The spaces used are ¼ to ⅜ inch for weathered, ½ to ⅝ inch for unweathered. This gives extremes for angle of nip from 17° 0′ to 19° 22′. The matte will not be nipped with less spaces, showing that this is maximum working angle of nip. One hundred and thirty revolutions per minute (817 feet periphery speed) seems to give the best result. They were formerly run at 300 revolutions (1,885 feet periphery speed), but they did not bite as well as at the present speed, and gave trouble from choking.

In Mill 20, No. 1 rolls crushing pyrite with quartz and porphyry, the latter more or less weathered, when running at 102 revolutions per minute (640 feet periphery speed) gave excessive wear. When reduced to 92 revolutions (578 feet periphery speed), they gave normal wear. The excessive wear was undoubtedly caused by the slipping of the ore which took place at 102 revolutions, but which did not occur at 92 revolutions.

In Mill 22, No. 1 rolls when running at 35 revolutions per minute (275 feet periphery speed) on galena and limestone, became glazed; when reduced to 28 revolutions (220 feet periphery speed) this difficulty disappeared. The glazing was very likely due to slipping of the ore, which ceased as soon as the speed was reduced.

§ 94. Ratio of the Diameter of the Hole in the Trommel to the Space Between the Rolls.—Since the wider the space the more favorable is the angle of nip, and the greater the tendency to run freely and avoid the making of fines, the mill man will naturally wish to know how wide a space he can use between his rolls and still get a large proportion of the crushed material to go through his screen. This ratio in Table 49 ranges from 0.33 to 12.5. Where it is less than 1.00, the rolls are either doing choke crushing (see § 97), or are not crushing finely enough to put the ore through the screen. In those cases where it is larger than 1.5, the rolls are either running with loose springs or they are sending their product to a coarser screen than the size for which they are crushing. In so great a range of values it is impossible to get an average that is worth anything. The author is inclined to the opinion that 1¼ would be a safe value. For example, ½-inch space between rolls would crush finely enough for most of the product to pass through a ⅝-inch hole in the trommel, because ⅝ inch is 1¼ times ½ inch. This ratio may prove satisfactory for free crushing, but a much less ratio will serve for choke crushing. (See No. 6 rolls in Mill 91, § 105).

§ 95. Journal Friction.—By this is meant the resistance to revolving due to the pressure between the bearing and the shaft. There are several causes which contribute to increase this.

(1) The weight of the roll, shaft and gear or pulley.
(2) The reaction from the pull of the belt or gear.
(3) The reaction from crushing the rock, which may include spring pressure.
(4) Speed. High speed increases it, low diminishes it.

(5) Lubrication. Neglect of lubrication increases it, attention diminishes it. The resultant of the forces mentioned will cause a pressure between the journal and the bearing, and the loss of power due to friction will increase as this force increases.

In this connection there are three considerations of importance to the mill man. (1) The lubrication is under his control and should receive his careful attention. (2) The spring pressure should never be allowed on the roll journal in coarse crushing rolls under free crushing conditions, except when necessary to do the crushing at the moment of choke feed or when a drill point or other hard object is passing through the rolls; this he can control by judicious use of shims between the boxes or of compression bolts. In fine crushing with choke feed it is necessary to have the full pressure of the springs to do the work except, of course, when no feed is coming to the rolls. (3) The area of the journal bearing surface is fixed by the original design of the rolls. A large journal surface may not save anything on the loss due to friction, but it certainly will save on wear, and the life of the babbitt may be lengthened greatly by using large journals. Table 40 gives the practice in this respect. The table is not as conclusive as is desirable on one point, namely, while it is certain that all the rolls using a space are held apart by shims or by compression bolts, it is not certain whether the rolls that are said to be set up close do or do not prevent the whole pressure of the springs from acting on the journals. Rolls which have the whole pressure of the springs acting on the journals at all times are wasting power and wearing out babbitt faster than is necessary. Table 37 gives the diameters and lengths of journals used in the mills visited, and in a few instances the estimated spring pressures.

To demonstrate the importance of duly considering the size of the journals, the following computation has been made: In Mill 26, the roll, shaft, core and shell weigh about 5,000 pounds, and we may assume from the results given in § 254 that the average normal pressure due to crushing is not over 5,000 pounds. The resultant of 5,000 pounds weight and 5,000 pounds crushing pressure on the two journals is 7,071 pounds. If each journal is 8×10 inches or 80 square inches of projected area, the pressure on one of the journals will then be $\frac{7,071}{80\times 2}=44$ pounds per square inch. But when a sudden rush of ore or a drill point comes and the rolls are sprung suddenly apart we have momentarily acting upon the two journals a resultant amounting to 50,249 pounds, due to the whole spring pressure of say 50,000 pounds, and the weight of 5,000 pounds. This yields $\frac{50,249}{80\times 2}=314$ pounds per square inch. A 4×8-inch journal, the size used on some of the rolls, if doing the same work as above, would have pressure of 110 pounds and 785 pounds per square inch respectively. Going to the other extreme, a 9×16-inch journal, which is the largest given in the table, would, if doing the same work, have pressures of 24 pounds and 174 pounds per square inch respectively. When we consider that with rolls set close and with shims left out, the larger pressure is acting all the time upon the journals we see the importance of always using shims or compression bolts.

Kent* says that it is almost impossible to have over 200 pounds constant pressure per square inch as the box heats and the oil squeezes out. This shows the importance of using large sized journals. Vezin designs his rolls, used in Mill 94, for a maximum pressure when the whole spring force is on, as when a hammer head is passing through, of 264 to 533 pounds per square inch of projected area. He does not expect a pair of 27×14-inch rolls to have more than 300 or

* Kent, "Mech. Eng. Pocketbook," p. 996.

350 pounds even when doing choke crushing on very hard rock. This amounts to a pressure of 60 tons between the rolls. Argall uses only 20 tons pressure on rolls of the same size. There is a decided tendency toward the use of larger journals.

The Gates Iron Works has succeeded by lengthening the journals of rolls, in prolonging the life of the babbitt from 30 days to 9 months. Their tubular self-lining boxes make this possible. The ordinary rigid boxes, however, if lengthened would be liable to heat more and have their babbitt cut faster owing to the flexure of the shaft, unless the diameter of the shaft is increased at the same time.

It is hardly necessary to add further that it is important to have the journals well protected from dust and to keep them well oiled.

§ 96. POWER.—Power used by rolls may be divided into two parts, that used in crushing, and that used up in friction. The former depends upon the hardness of the rock, the amount of ore fed, the specific gravity, and the amount of reduction. The latter includes journal friction and friction of the gears when used. An approximate idea of the power required is given in Table 54. For the capacities of these rolls see Table 34.

TABLE 54.—POWER FOR ROLLS.

Mill No.	Roll No.	Horse Power. (a)	Mill No.	Roll No.	Horse Power. (a)
16	1	4	30	2	6
17	1	4	30	3	10
21	1	10	30	4	4
21	2	10	31	1	10
22	1	20	31	2	7
22	2	20	31	3	7
25	1	8	32	1	8
25	2	5	32	2	7
26	1	9	32	3	4
26	2	9	32	4	4
28	1	9	35	1	10
28	2	5	35	2	15
30	1	10	42	1	10

(a) These are all estimated, except those of Mill 26, which were measured by indicating the engine.

The manufacturers use certain estimated values for the power required by rolls when planning the engines for mills. For example, the Colorado Iron Works allow 12 horse power for their 27×14-inch rolls and 8 horse power for their 20×12-inch rolls when crushing medium hard ore. Fraser & Chalmers make allowance for rolls as given in Table 55. They are probably correct for a moderate spring pressure only.

TABLE 55.—POWER FOR FRASER & CHALMERS ROLLS.

Size of Rolls. Inches.	Horse Power Allowed.	Size of Rolls. Inches.	Horse Power Allowed.
9x9	3	26x10	5
12x12	3	24x14	6
16x10	4	26x15	6
18x10	4	30x12	7
20x10	5	36x14	7
22x10	5	36x16	7

In regard to the belts and pulleys, however, rolls are furnished with sizes which, according to Nagle's formula,* can safely transmit two to four times the power

* Kent, "Mech. Eng. Pocketbook," p. 878.

named. This excessive width of belt and pulley are to provide for the increase of power demanded by a moment of choke feed, a drill point or other hard object. With two pairs of rolls, one of which is doing coarse crushing and the other fine, the former running at one-half the speed of the latter, the leverage of the belt over the resistance to crushing must be twice as great in the former as in the latter, the power used being the same for both. This may be obtained by doubling the width of the belt, by doubling the diameter of the pulley or by putting in gears.

For elaborate results of tests for power used by rolls see Von Reytt's work in Table 177 and § 251.

§ 97. QUALITY OF CRUSHING BY ROLLS.—This depends to a considerable extent upon the way that rolls are run. Rolls, when run slowly upon a given quantity of ore, may be so crowded that the fine particles cannot tumble away from the coarse as soon as sufficiently broken. In consequence, such fine particles may be subjected to still further crushing due to the action of the particles one upon another. This condition will be called "choke" crushing. If now the speed of the rolls be gradually increased, the percentage of fines will gradually decrease until a speed is reached at which the particles are treated individually, and there is plenty of room for the crushed fine ore to drop away from the coarser part under the acceleration of gravity and so escape further fine crushing. This condition will be called "free" crushing, and it is the condition under which the maximum coarse and minimum fine material will be made. Further increase of speed beyond this point gains nothing. In fact, it may cause the percentage of fines to rise again, since a given lump is crushed in a shorter period of time and hence shattered more.

The speed at which "free" crushing begins depends mainly upon two things: (1) The rate at which the ore is fed to the rolls; for example, the faster it is fed the higher the speed at which "free" crushing begins. (2) The amount of reduction in diameter of the grains by one passage through the rolls; for example, to do "free" crushing, rolls will have to run faster when crushing 1½ inch lumps to ¼ inch than when crushing the same to ¾ inch with like rate of feed.

Rolls acting under "free" crushing conditions stand pre-eminently at the head of the list among crushers for producing a large proportion of coarser sizes with a small proportion of fines. "Free" crushing, when practicable, is the more advantageous of the two methods. It cannot be used, however, for crushing very fine, on account of the impracticability of maintaining space small and the surfaces true. For fine work the feed must, therefore, be increased so as to produce "choke" crushing, and even this will not give a high efficiency. For example, the author cites the finest pair of rolls in a cyanide plant crushing to 40 mesh. These rolls are set up so that they do not quite touch and when crushing they stand from ¼ to ⅜ inch apart under the full pressure of the springs. The amount that is returned to them, that is, the oversize of a 40-mesh trommel, amounts to at least 66% and probably 75% of what comes to the trommel.

Crushing with rolls set close and springs at moderate tension is a method often adopted for crushing a little coarser than the space between the rolls would indicate. The product, however, will be uncertain, for if the rolls are fed faster it will be coarser. Moreover, constant working of springs shortens their life and increases wear of boxes in guides. Crushing with moderate reduction tends toward maximum coarse grains, minimum fines, and this seems to be the line which deserves most attention. Crushing with great reduction tends to pulverize and to increase the proportion of fines. This question of fines will appear again under "Capacity," § 98, and "Graded Crushing," § 99.

A few examples of sizing tests of the product of rolls are here given. They

are not of great value. The conditions under which they were obtained are not known, and these conditions are all important for the interpretation of the result. For we may have rolls crushing with:

(1) Small reduction or large reduction of size.
(2) Loose springs or tight springs.
(3) Shims or no shims.
(4) Space or no space.
(5) Favorable or unfavorable angle of nip.

Gradations on all the above five lines affect the percentages of coarse and fine grains.

At Mill 25, dolomite with disseminated galena after passing through a Blake breaker set at 1½ inches is crushed by No. 1 rolls which are 30 inches diameter, 14 inches face, set close, making 8½ revolutions per minute and therefore doing choke crushing. The product yields: Through 15.88 on 9.53 mm., 7%; through 9.53 on 6 mm., 12.6%; through 6 on 4 mm., 15.1%; through 4 on 3 mm., 14.6%; through 3 mm., 50.7%; total, 100.0%.

No. 4 rolls of Mill 30 are 24 inches diameter, 14 inches face, make 48 revolutions per minute, are set close and treat 30 tons per 24 hours of ore containing quartzite, siderite, galena, etc., (fine jig middlings). The feed has all been through 8 mm. and the product goes to a 5-mm. trommel, the oversize being returned. Sizing tests of the feed and product yielded:

	Feed.	Product.
	Per Cent.	Per Cent.
Through 8 mm. on 7 mm.	0.539	0.568
" 7 mm. on 5 mm.	29.794	18.336
" 5 mm. on 3 mm.	44.478	24.724
" 3 mm. on 8 mesh	3.484	2.674
" 8 mesh on 10 mesh	9.979	6.899
" 10 mesh on 16 mesh	8.998	14.311
" 16 mesh on 20 mesh	2.281	15.341
" 20 mesh on 24 mesh	0.230	5.776
" 24 mesh on 30 mesh	0.127	5.878
" 30 mesh on 40 mesh		3.513
" 40 mesh		6.971
	100.000	100.000

A sizing test was made on Newfoundland chromite in a serpentine gangue that had been crushed through a 20-mesh screen by successive passes through rolls at the Massachusetts Institute of Technology. The rolls were 9×9 inches, run at 60 revolutions per minute, set close, crushing material from a breaker all below ¾ inch in diameter. The product yielded: On 20 mesh,* 0.41%; through 20 on 30 mesh, 20.55%; through 30 on 40 mesh, 14.84%; through 40 on 50 mesh, 12.39%; through 50 on 60 mesh, 9.87%; through 60 on 80 mesh, 9.05%; through 80 on 100 mesh, 10.03%; through 100 on 120 mesh, 3.59%; through 120 on 140 mesh, 4.08%; through 140 mesh, 15.25%; total, 100.06%.

Coxheath ore containing chalcopyrite in a siliceous gangue and assaying 4.44% copper was sized by Mr. R. G. Hall, at the Massachusetts Institute of Technology. The ore was passed through a Blake breaker, set at 1 inch, then through a Gates breaker, set at ½ inch, and finally through a pair of 9×9-inch rolls, set close. All below 3 mesh was sifted out after each operation and only the oversize was crushed further. The final product yielded:

* For actual sizes of holes in these screens, see Table 268.

	Weight.	Assays in Copper.
	Per Cent.	Per Cent.
Through 3 mesh on 4 mesh (a)	41.47	3.42
" 4 mesh on 5 mesh	10.00	4.36
" 5 mesh on 8 mesh	21.80	4.42
" 8 mesh on 10 mesh	7.00	4.54
" 10 mesh on 14 mesh	3.27	4.61
" 14 mesh on 18 mesh	1.37	4.70
" 18 mesh	15.18	7.15
	100.09	

(a) For actual size of holes in these screens, see Table 258.

With the same ore, middlings and tailings of jigs between 3 and 8 mesh and assaying 2.8% copper were crushed by successive passes to go through an 8-mesh sieve. The product yielded:

	Weight.	Copper.
	Per Cent.	Per Cent.
Through 8 on 10 mesh (a)	27.8	2.8
" 10 on 14 mesh	23.2	2.6
" 14 on 18 mesh	13.0	2.6
" 18 mesh	36.1	3.4
	100.1	

(a) For actual sizes of holes in these screens, see Table 258.

Sahlin[27] reports that Port Henry magnetite ore crushed by breakers and rolls to pass through a 10-mesh (0.075 inch) screen yielded: Through 10 on 16 mesh, 31%; through 16 on 24 mesh, 21%; through 24 on 40 mesh, 7.9%; through 40 on 60 mesh, 17.5%; through 60 mesh, 20.9%; loss, 1.7%; total, 100.0%.

Krom[28] says that when crushing Port Henry magnetite ore through 10 mesh only 3¼% of the product would pass through 100 mesh, and when crushing through 16 mesh only 6¼% would pass 100 mesh.

At the Geddes & Bertrand mill, Nevada, Krom rolls crushing silver ore yielded: On 0.8 mm., 22%; through 0.8 on 0.7 mm., 5%; through 0.7 on 0.6 mm., 6%; through 0.6 on 0.5 mm., 5%; through 0.5 on 0.4 mm., 8%; through 0.4 on 0.3 mm., 7%; through 0.3 on 0.2 mm., 9%; through 0.2 on 0.1 mm., 11%; through 0.1 mm., 27%; total, 100%. In previous tests there has been no special ratio for the sizes of sieves used. In this it will be noticed that the sieve scale has an arithmetical ratio.

Mr. C. W. Goodale[30] gives the following sizing tests on Butte ore which had passed through a Blake breaker, rolls and limiting screen. The sieve scale in this test has a geometrical ratio of 1.4.

	Weight.	Silver Assay.
	Per Cent.	Ounces Per Ton.
Through 4 on 2.8 mm.	9.03	12.7
" 2.8 on 2 mm.	34.70	14.3
" 2 on 1.4 mm.	16.21	13.9
" 1.4 on 1 mm.	11.70	14.1
" 1 on 0.6 mm.	7.42	15.3
" 0.6 on 0.16 mm.	11.44	17.5
" 0.16 mm.	9.50	23.6
	100.00	

For further elaborate sizing tests of the product of rolls under different conditions, see Table 178.

§ 98. Capacity or Quantity Crushed by Rolls.—The capacity or the quantity crushed by rolls is the number of tons that can be crushed from a given size

to pass through a certain size of hole in a given time. In free crushing, provided the spring is sufficiently stiff to hold the rolls to their work, provided also that the angle of nip is favorable, the capacity is dependent upon the speed, the width of face and the space or distance the rolls are set apart; also perhaps to a slight extent in slow moving rolls upon whether or not water is fed to aid the discharge of the crushed material; where the capacity is given in tons the specific gravity of the ore will also affect it. In choke crushing the capacity depends upon the measures given above and upon the pressure. The greater the pressure, the greater will be the reduction in size; for example, in Mill 91 the pressure upon the No. 6 rolls is governed by periodical sizing tests of the crushed ore. If the rolls are making too much oversize more pressure is put on. The capacities of rolls in the mills are given in Table 34.

To illustrate the capacity of rolls, let the reader imagine that the rolls are rolling out dough in the form of a long ribbon. It is clear that if the rolls are speeded to twice the rate, the ribbon delivered per minute will be twice as long; again if the faces of the rolls are twice as wide, the ribbon will also be twice as wide; and, finally, if the rolls are set twice as far apart, the ribbon will be twice as thick. Either of the changes will have increased the quantity of dough put through to twice the amount. In dealing with ore, however, we have a non-plastic material, the volume of mixed coarse and fine broken ore being about one and three-fourth times the volume of the same weight of solid ore. In other words, a given volume of broken ore weighs only about 57% of what it would if it were solid. From this it follows that the maximum which can be obtained in practice is only about 57% of the theoretical solid ribbon which would be obtained if the ore were plastic. The compression of the ore by the rolls would tend to raise this figure somewhat, but on the other hand the impossibility of obtaining an exactly uniform rate of feed which would correspond to the maximum ribbon would tend to lower it. It will be of interest to note how near the authorities and mill men approach this figure.

Stutz[24] quotes Pernolet as saying this factor should be 20 to 25% of the full ribbon. Stutz himself says that his experience has been that 33% is the proper factor. Table 56 shows the practice as calculated by the author from the mills visited.

TABLE 56.—THEORETICAL AND ACTUAL CRUSHING RIBBONS.

Mill No.	Roll No.	Calculated Ribbon per Minute.	Actual Ribbon per Minute.	Factor=% the Actual is of the Calculated.	Rolls set Close or Spaced.	Mill No.	Roll No.	Calculated Ribbon per Minute.	Actual Ribbon per Minute.	Factor=% the Actual is of the Calculated.	Rolls set Closeor Spaced.
		Cu. in.	Cu. in.	%				Cu. In.	Cu. In.	%	
10	1	10,643	3,299	31.0	c.	30	1	31,667	3,024	9.5	s.
15	1	30,479	440	1.4	s.		2	13,722	715	5.2	s.
16	1	46,512	660	1.4	c.		4	7,341	330	4.5	c.
17	1	46,759	495	1.1	c.	31	1	40,714	2,199	5.4	s.
18	1	17.812	1,099	6.2	s.	32	1	5,453	6,598	(b)121·6	s.
20	1	41,619	1,099	2.6	s.	35	1	37,981	3,298	8.7	s.
	2	22,609	660	2.9	s.	40	1	5,843	550	9.4	s.
21	1	23,750	(a)440 (a)660	(a)1.9 (a)2.8	s.		2	2,921	825	28.3	s.
							3	5,843	550	9.4	s.
	2	14,102	275	1.9	c.		4	10,686	1,870	16.7	c.
22	1	16,889	2,199	13.0	s.	42	1	5,529	1,375	24.9	c.
24	1	8,595	825	9.6	s.	43	1	10,686	1,099	10.3	c.
	2	5,089	1,539	30.8	s.	86	1	13,002	825	6.3	s.
25	1	2,650	1,154	43.5	c.	87	1	15,833	1,099	6.9	s.
26	1	9,500	1,099	11.6	s.	88	1	23,750	825	3.5	s.
	2	9,500	1,099	11.6	s.	89	1	12,723	2,199	17.3	c.
	3	20,267	2,199	10.9	c.		2	14,137	2,199	15.6	c.
27	1	33,250	1,649	5.0	s.		3	14,137	2,199	15.6	c.
28	1	5,717	1,055	18.5	s.	90	1	66,000	659	1.0	s.
	2	7,272	264	3.6	c.	92	1	2,884	990	34.3	c.
							2	9,046	275	3.0	c.

(a) These two figures are for hard and soft ore respectively. (b) This roll is probably run with a loose spring.

In preparing this table the rule used for space rolls is:

$$\frac{\dfrac{t\times100\times2{,}000}{1{,}440\times0.036089\times3.5}}{l\times\pi\times d\times r\times s} = \text{per cent. actual ribbon is of theoretical, where}$$

t=tons treated in 24 hours.
100=factor to change to per cent.
2,000=number of pounds in a ton.
1,440=number of minutes in a day.
0.036089=weight in pounds of a cubic inch of water.
3.5=assumed specific gravity of ore.
l=length of rolls in inches.
π=ratio of diameter to circumference=3.1416.
d=diameter of rolls in inches.
r=revolutions per minute.
s=the space the rolls were set apart in inches.
$l\times\pi\times d\times r\times s$=cubic inches in calculated ribbon.
$\dfrac{t\times2{,}000}{1{,}440\times0.036089\times3.5}$=cubic inches in actual ore ribbon.

In making the computation for rolls set close, the diameter of the holes of the limiting trommel was substituted for the space s, for since the theoretical value of s was zero, no ore could go through the rolls until they were sprung apart. The diameter of the hole in the trommel seems a natural figure to use. The great variation shown in the table is due to the fact that practice has not been guided by a uniform rule in this matter. An inconsistency occurs in Mill 32, roll No. 1, which, if the quantity quoted by the author is not set too high, could only exist with loose springs and the rolls sprung apart most of the time. It is probable also that other rolls are run with loose springs, in which case the percentages quoted for them would be high. The spaces given are supposed in every case to be the beginning set, which wears to a little larger before the rolls are set up again. This also would make the percentage in the table high. The tons per 24 hours used in the table are everywhere the estimated work actually done, not the amount that in the opinion of the mill owners could be done. The rolls are thought by their owners, in nearly all cases, to be worked somewhat below their capacity. This would tend to make the percentage in the table low.

For 24×14-inch rolls revolving 75 times per minute, crushing 1½-inch lumps, set at ½ inch, Fraser & Chalmers estimate the capacity to be 240 tons in 24 hours. This gives an actual ribbon which is 6.7% of the theoretical.

In regard to the capacity of rolls, the feeding is all important, an even feeder apportioning the ore evenly to the roll surfaces, an uneven feeder overcrowding the rolls at one moment and allowing them to be idle the next.

In order that fine rolls may have even a moderate capacity when under free crushing conditions high speed is necessary. This is clear from the ribbon theory which shows that capacity is proportional to the space at which rolls are set. In practice, however, fine rolls are apt to be run on the choke crushing basis with the space widened by the thickened ribbon of ore, and in this way the demand for high speed is somewhat lessened.

When the reduction is not too great and the angle of nip is advantageous, a soft granular mineral should have no advantage in capacity over a hard brittle one. But, on the other hand, when the reduction is great and the angle of nip disadvantageous, the hard, brittle mineral will jump into the air after the first contact and waste time, while the soft granular mineral will go through in spite

of the fact that the rolls seem to be working at a disadvantage. The granular mineral usually breaks easier since its fracture is generally the fracture of that material only which cements the grains, while the fracture of a compact, flinty or vitreous specimen is the fracture of the whole mass.

At the dry crushing plant of the Metallic Extraction Co., at Florence, Colo.,[61] there is a Blake breaker, a Blake multiple jaw breaker, and three pairs of 26× 15-inch rolls in series, each making 100 revolutions per minute. The first pair of rolls is fed with 4 to 6-mesh stuff containing also some material coarser than 4 mesh, the second with 6 to 15-mesh stuff and the third with 15 to 40-mesh stuff. There are screens after each pair of rolls. The ore, which is hard andesitic breccia and phonolite, is crushed to 40 mesh at the average rate of 125 tons per 24 hours. At times they crushed 160 tons per 24 hours.

At Mill 94, for the arrangement of which see Chapter XX., the ore is reduced from 1 inch, through 20 mesh at the rate of 75 tons in 24 hours. The plant is run much below its full capacity, however, and it is estimated that it can crush 180 tons in 24 hours.

§ 99. Graded Crushing.—In crushing rock by rolls we may either reduce it by one passage through rolls set close, making the whole reduction at this one time, or the rock may be put through two or more pairs of rolls in series with spaces graded to suit the work, the space in the second finer than that in the first, the third finer than the second, and so on, the fines being sifted out between each crushing. The former method is called single-stage crushing, the latter is called graded crushing or crushing by stages. The effect upon the rock crushed is that the greater the number of stages the less fines to be lost in the concentration and greater saving of values, also capacity and economy of power.

Table 52 shows how graded crushing may be planned. For example, 20-inch rolls reducing one-half will crush 1½-inch stuff down to ¾ inch with ¾-inch space and angle of nip of 15° 10′, and 16-inch rolls following will crush ¾-inch stuff down to ⅜ inch with ⅜-inch space and 12° 9′ angle of nip; while 30-inch rolls would be required t bring 1½ inch down to ⅜ inch at one passage with ⅜-inch space and 15° 21′ angle of nip. Of these two arrangements the former will keep the roll shells in better condition continuously, will have less wear and tear, and the two machines, each making a reduction of one-half, will make much less fines than one machine crushing to one-fourth the diameter. The first cost will not be materially lessened by using the two small machines to replace the one large one, but the power will be less for equal capacity.

From Table 49 it appears that in rolls of Class I. the maximum lump of the feed ranges from 63.5 to 17 mm. and the maximum lump of the product from 30 to 2.11 mm.

Class II., feed, 38.1 to 2.59 mm.; product, 16 to 1.47 mm.

Class III., feed, 63.5 to 12.7 mm.; product, 25 to 2.11 mm.

Class IV., feed, 38.1 to 2.11 mm.; product, 38.1 to 1.52 mm.

By inspecting rolls of Classes I. and II., it is clear that the feed is largely of the coarsest size and tapers downward, while that for rolls of Class III. is largely of the intermediate sizes, with a few scattering lumps of the larger size which have passed by the ends of the rolls. To set the rolls with an angle of nip that is suitable for this product, one must either suit the few large lumps and slight the greater quantity of smaller sizes, which will be a waste of crushing capacity, or set the rolls to suit the smaller sizes, in which case they will be unsuited to the larger ones. This latter plan can be done where large rolls are used. But if the advantage of graded crushing is sought with the lower cost of small rolls, it seems to the author that the sizing apparatus should be so arranged as to return the few larger lumps to the rolls of Classes I. and II., and allow the rolls of

Class III. to have an even product to crush; in other words, make each roll clean up its own oversize.

The great irregularities in these tables show clearly that while an appreciation of the advantage to be derived from graded crushing is on the increase in this country, the mills have not yet fully adapted themselves to it. For example, note the rolls of Class I., the feed of which in some cases contains lumps ranging all the way from 63.5 mm. down to 0 mm. They do not make the rolls of Class I. and in some cases the rolls of Class II. clean up the oversize of their trommels, and they feed much coarse and fine stuff mixed together to the rolls of Class IV. or the middlings rolls.

§ 100. Cost of Repairs on Rolls for Other than Wearing Parts.—The figures obtained from the mills are shown in Table 57.

TABLE 57.—REPAIRS FOR ROLLS.

Mill No.	Roll No.	Cost per Year.	Cost per Ton. Cents.
31	1	$280	0.400
31	2	250	.....
28	1	125	0.372
28	2	50	0.595

§ 101. Cost of Crushing by Rolls.—It seems to the author that 100 tons per 24 hours is a good average of the work done by rolls. This would require about 10 horse power. The various items of cost for these rolls are as follows:

Power, 1.30 cents per ton*; attendance, 1.50 cents per ton†; wear of roll shells, 0.02 to 4.00 cents per ton‡; repairs, oil, babbitt, etc., 0.37 to 0.60 cents per ton§; total, 3.19 to 7.40 cents per ton.

These figures do not include the cost of truing roll shells, as the author has no data on this. Moreover this item is believed to be unnecessary where proper material is used for shells and the rolls are properly run. These figures are very general and are given more to indicate the separate items to be considered than to give accurate figures on cost. Thus in Mill 94 it takes no more men to look after eight pairs of rolls than after four pairs. Again, the specific gravity and hardness of the ore treated will make a great difference in the power and capacity, as shown in § 255, and consequently in the cost.

C. W. Goodale[30] gives the cost of crushing tailings at the Colorado Concentrator as 4.6 cents per ton, which includes the expenses for screens and elevators as well as rolls, but does not include power.

R. Hunt[9] gives the cost of crushing by Cornish rolls in Cornwall. The rolls are 21 inches diameter and 19 inches face, make 8 revolutions per minute, and crush 40 to 60 mm. stuff down to 0 to 6 mm. at the rate of 60 tons per 24 hours. The two shells weigh 2,700 pounds when new, 1,600 pounds when discarded and last 2,000 tons. The items per ton were as follows: Roll shells, 1¼ pence; labor, 2¼ pence; steam power (5 horse power), 5 pence; wear and oil, 1 penny; total cost per ton crushed, 9½ pence=19 cents.

Special Forms of Rolls.

Special forms of rolls have been designed for both coarse and fine crushing.

§ 102. Rolls with Sluggers and Knobs.—The No. 1 rolls of Mill 91, shown in Figs. 60, 61, 62*a* and 62*b*, are 6 feet in diameter with 6 feet face, with flat topped

* Assuming the cost of a horse power to be $40 per year of 308 days, of 24 hours each. (Kent's "Mech. Eng. Pocketbook," p. 790.)

† Assuming that labor costs $3 per man per shift of 12 hours, and that one-quarter man is required per shift. ‡ Taken from Table 35 of roll shells. § Taken from Table 57 of repairs.

conical knobs *a*, 2 inches high and 2 inches in diameter at the top, cast upon the surface in longitudinal rows, eight knobs in a row. One roll has also placed diametrically opposite each other, two longitudinal rows of sluggers *b* six in each row. These are striking pieces 4 inches high and they are frustrums of flattened pyramids, the upper bases of which are 6×2 inches, and the lower are about 23×6 inches. They are curved to conform to the circle of the roll. These sluggers and knobs are cast upon segments *c* which are bolted to the permanent cores. The segments are 3 inches thick; those for the sluggers are 23 inches wide by 36 inches long. Two of these fill the length of the roll. The knob segments are 11 inches wide and of two lengths, 27 and 45 inches respectively, which alternate, and so break joint around the circle. The slugger roll has 16 knob segments and two slugger segments. The other roll has 20 knob segments; all of the segments are of chilled cast iron. It is estimated that the slugger plates will wear for 400,000 tons.

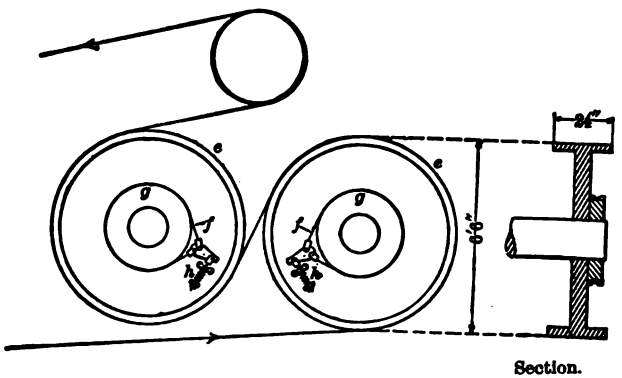

FIG. 60.—METHOD OF DRIVING EDISON'S GIANT ROLLS.

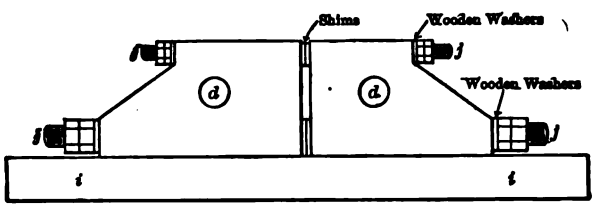

FIG. 61.—PILLOW BLOCKS FOR EDISON'S GIANT ROLLS.

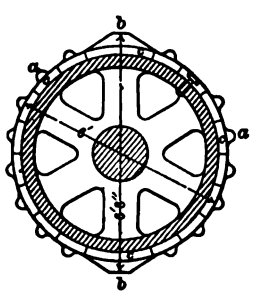

FIG. 62*a*.—SECTION OF ONE OF EDISON'S GIANT ROLLS.

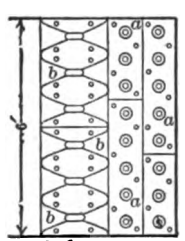

FIG. 62*b*.—FACE OF ROLL (UNROLLED), SHOWING SLUGGERS AND KNOBS.

The rolls are 7 feet 2 inches center to center, making them 10 inches apart between the ends of the knobs, or 14 inches apart between the surfaces. They make 150 revolutions per minute, which corresponds to a periphery speed of 2,827 feet per minute. The weight of the two moving parts is about 167,000 pounds. The journals *d* are 30 inches long and 16 inches in diameter and made in the form of thrust bearings. The shafts are made of horseshoe hammered iron.

Driving pulleys *e* are placed on both ends of both roll shafts. They are 6 feet 6 inches in diameter and 24 inches wide. They can run loose on the roll shafts, but do not do so until they have overcome the friction of the band brakes *f* which connect them with smaller pulleys *g* 3 feet diameter, 4 inches face, keyed to the shafts. The band brakes are held up with springs *h* of 2,500 pounds tension. The friction is estimated at 500 pounds, which is the driving force upon

the roll. This force is insufficient to start the rolls; they, therefore, have to be started with a bar. The driving is by a special design using a tightening pulley which enables both rolls to be driven by the same belt, which is made of six-ply rubber. The pillow blocks are placed upon guides *i* and are held together by two powerful bolts *j* one above and one below. The bolts have wooden washers and lock nuts at each end; the pillow blocks are held apart by shims.

The average skip load in this mill weighs 6½ tons. This is fed to the rolls over a roller feeder. The rolls can take an 8-ton lump of rock, but the maximum lump that they practically get weighs 5 tons. These are broken by the blows of the slugger plates to ½-ton lumps, or 2-foot cubes, and these lumps are in turn seized and crushed between the knobs. The blow of the slugger is equivalent to that which would be given by a weight equal to that of the rolls, falling nearly 40 feet. The capacity when run at 150 revolutions per minute is 300 tons per hour, or 7,200 tons per 24 hours. When running empty at 150 revolutions, they consume 50 horse power. With the feeding of every skip load, however, the speed is reduced to 135 revolutions on an average, and the full transmitting power of the four band brakes, or 80 horse power, is called upon. This period of retarding and accelerating is estimated to be about one-sixth of the time, making the average total power used by the rolls when crushing 300 tons per hour, to be 55 horse power. These powers were measured with ammeter and voltmeter on a motor.

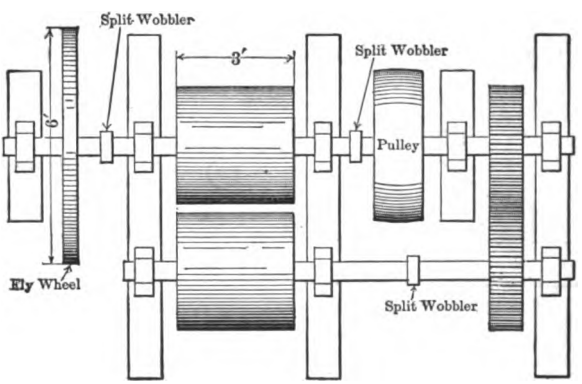

FIG. 63.—METHOD OF DRIVING EDISON'S NO. 3 ROLLS.

§ 103. ROLLS WITH KNOBS.—In Mill 91, the No. 2 rolls are 4 feet in diameter with 5 feet face and have knobs upon them 2 inches high, like those of the No. 1 rolls, only smaller. In fact the whole mounting of plates and connection of power is the same as that of No. 1 rolls, with the exception that there are no slugger plates and the rolls are driven from one end only by pulleys 30 inches in diameter and 18 inches face. The two rolls, weighing 96,000 pounds, are set 7 inches apart between the faces, or 3 inches between the knobs. The journals are 14 inches in diameter and 30 inches long. The knobs show but little wear after crushing 90,000 tons. Their capacity is 300 tons per hour crushing what has passed through the No. 1 rolls. They require 38 horse power when crushing, and 30 horse power when running empty.

§ 104. CORRUGATED ROLLS.—Mill 91 has three such rolls, Nos. 3, 4 and 5. The arrangement of the No. 3 rolls is shown in Fig. 63. They are geared to bring the ridge of one roll opposite the groove of the other. Their dimensions are given in Table 58.

All three sets of rolls have mechanism of design *C* (see § 87). In this case, however, finger gears are not used, but carefully cut gears, since the distance between the roll shafts is kept constant. These gears run in oil kept warm by a steam pipe. The shells are made in segments, of chilled cast iron. Spaces of about 4½ inches at each end, with no corrugation, are cut down thinner to save wearing the heads of the bolts which hold the segments to the cores. These

rolls are all driven through split wobblers (see *QQ'*, Fig. 64*b*), with shearing safety pins *q*. No. 3 rolls has a fly-wheel (see Fig. 63) 6 feet diameter with a rim 4 inches wide and 5 inches thick. It is connected through a split wobbler to the roll shaft which receives the power. The roll shafts are all of horseshoe hammered iron and they all have thrust bearings. The arrangement of pillow blocks, bolts, shims and washers in No. 3 rolls is like the rolls with sluggers and knobs. No. 4 rolls has springs which are not used, as they rely upon the split wobblers for safety. No. 5 uses also springs for safety, six on each side, 16 inches long, made of 1¼-inch round steel. They exert a pressure of 80,000 pounds. No. 3 rolls is fed with material which has passed through No. 2 rolls, No. 4 with what passes No. 3, and No. 5 with what passes No. 4.

TABLE 58.—CORRUGATED ROLLS.

Abbreviations.—C.=center; Cap.=capacity; Cor.=corrugation; Crus.=crushing; Dist.=distance; Emp.=empty; Hol.=hollows; H. P.=horse power; Ht.=height; In.=inches; Min.=minute; No.=Number; R. C.=rounded corrugations; Seg.=segments; S. G.=square grooves.

Roll No.	Diameter.	Face.	Space betw'n Shells.	Thickness of Shells.	Kind of Surface	Ht. of Cor.	Dist. C. to C. of Hol.	Width of Seg.	Revolutions per Min.	Cap. per Hour.	Size of Journals.	Size of Pulley.	Total H. P. Crus.	Total H. P. Emp.
	In.	In.	In.	In.		In.	In.	In.		Tons.	In.	In.		
3	36	36	(a) 3½	3	R.C.	1¼	7	8	135	300	.....	54x12	14	4
4	36	36	(a) 1½	3	R.C.	½	3	8	125	300	.....	54x12	39	4
5	24	20	½	.....	S.G.(b)	½	1½	.....	125	300	8x25	36x18	129	4

(a) The space here mentioned is the distance between the ridge of one roll and the groove of the other.
(b) These are square grooves ½ inch deep and ½ inch wide.

§ 105. THREE HIGH ROLLS.—(See Figs. 64*a* and 64*b*.) As the name indicates, this machine consists of three rolls *B, C, D,* one above the other. Mill 91 has four sets of these rolls, two of No. 6 rolls and two of No. 7. One set of No.

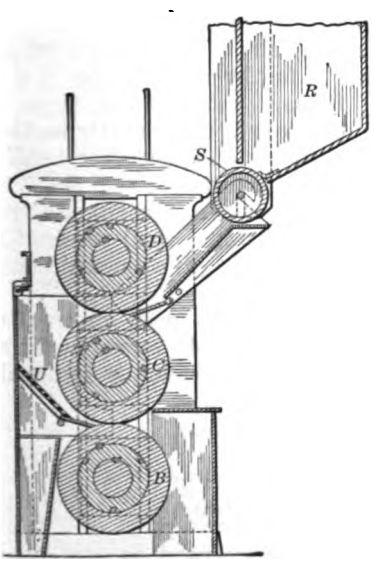

FIG. 64*a*.—END SECTION OF EDISON'S THREE HIGH ROLLS.

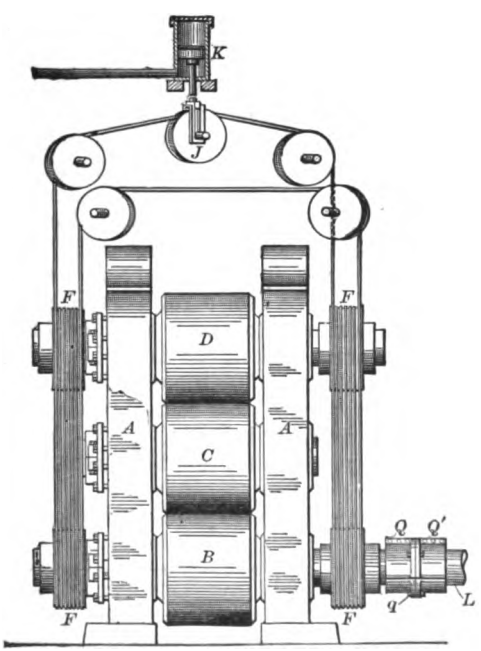

FIG. 64*b*.—SIDE ELEVATION OF EDISON'S THREE HIGH ROLLS.

6 and one set of No. 7 are run at a time. These rolls are 36 inches diameter, 30 inches face, and are run at 90 revolutions per minute. The shaft *L* of the lower roll is driven by beveled gears running in oil. These have wooden teeth which do not show any wear after doing their share of work on 90,000 tons, while metal gears depreciate 18% in a year. The power is transmitted to the roll by a split wobbler *QQ'* and a shearing safety pin *q*. The roll shaft has fixed babbitted boxes. The upper two rolls are driven by friction from the lower, and have boxes that are free to slide vertically in guides *A*. On each end of the lower and upper roll shafts are loose sheaves *F*, over each of which run seven passes of ½-inch wire rope with 19 wires to the strand, made of plough steel. A bight of the rope passing over an overhead pulley *J* furnished with a piston tightener *K*, driven by compressed air, supplies a pressure of 125,000 to 150,000 pounds to do the crushing. The use of these ropes eliminates almost all friction except that in the journals of the lower roll, due to the weight of the three rolls which amounts to 20,000 pounds. The journals of all these rolls are 12 inches in diameter, 18 inches long, made of horseshoe hammered iron with thrust bearings. The boxes are tubular, in halves, bolted together and put into the pillow blocks, all babbitted with pure babbitt.

The shells are made of soft gray cast iron which costs 2 cents per pound. Steel shells were found to flow at the ends 2 inches per day. Chilled iron shells will not bite the ore. The edges are beveled about 45° for about 2 inches from the ends to prevent chipping. Each shell is a true cylinder outside and inside and is keyed in place. It weighs 4,500 pounds, and is 8 inches thick when new, and wears down to 6½ inches before being discarded. It has to be trued every three days. This is done by reducing the speed of the roll shaft to that of a lathe, using pulley and reducing gears driven from the other set of rolls. To accomplish this, gears which mesh together are placed at the ends of all three roll shafts. When the truing is done, the gear from the middle shaft is unbolted and removed, while the upper and lower gears are allowed to remain, since they do not interfere with the crushing. Tungsten steel tools are used for truing; they work rapidly and keep their edges. The wear of shells is 0.25 cents per ton crushed for the No. 6 rolls and less for the No. 7.

To get a speed that would be slow enough for the rolls to bite the ore, 90 revolutions per minute was decided upon. The ore is fed by roller feeder *S* to the upper apron, which conducts it horizontally forward between the upper and middle rolls and the lower apron *U* catches it and feeds it horizontally backward between the middle and lower rolls. The rolls are set close together until the feed comes, which opens the No. 6 rolls to 1½-inches apart and the No. 7 to ½ inch apart. The No. 6 rolls crush of ½- inch stuff from No. 5 corrugated rolls, 300 tons per hour to pass a so-called 14-mesh (0.060×0.5-inch slot) screen. The oversize comes back at the rate of 200 tons per hour, making the amount handled by these rolls to be 500 tons per hour.

The No. 7 rolls treat material which has been through 14-mesh screen (0.060 ×0.5-inch slot), reducing it to $\frac{1}{50}$- inch (0.020×0.5-inch slot) screen at the rate of 135 tons per hour, to which must be added the oversize which is returned to the rolls.

Each set of rolls requires horse power as follows:

	When Empty. Horse Power.	When Crushing. Horse Power.
No. 6 rolls.....	10	260
No. 7 rolls.....	10	150

These rolls are claimed to have remarkably high efficiency as compared to ordinary crushing rolls, owing to the almost complete elimination of journal friction. As determined by the rise in temperature of the ore passing through, they give 85% mechanical efficiency against 15% of ordinary rolls.

Bibliography for Rolls.

1. Bilharz, O., (1896), "Mech. Aufbereitung," Vol I., p. 69. Description of coarse and fine rolls with power and capacity. Universal joint in the fixed roll shaft. Description of Schwarzmann's rolls.
2. Callon, J., (1886), "Mining," Vol. III., p. 34. Comparison between rolls and stamps. Description of rolls. Mathematical consideration of angle of nip. Proper speed.
3. Davies, E. H., (1894), "Mach. Metal. Mines," p. 225. Principle. Uses. Details. Precautions in running. Hexagonal core often used for attaching shells. Detailed cost of crushing by rolls. Advantages. Detailed description, capacity and wear of Krom's rolls. Detailed description and capacity of Gates rolls.
4. Egleston, T., (1887), "Metallurgy," Vol. I., p. 210. History. Description of Krom rolls. Advantages. Capacity. Wear. Comparison with stamps on cost and efficiency.
5. Eissler, M., (1896), "Metallurgy Gold," pp. 144, 148c. Description of Gates rolls with raff wheel and Krom's rolls.
6. Eissler, M., (1891), "Metallurgy Silver," p. 213. Description of Krom's rolls.
7. Foster, C. LeN., (1894), "Ore and Stone Mining," p. 553. Details of Cornish type with raff wheel, lever and weight, and hexagonal cores. Description and capacity of Krom's rolls.
8. Goupillière, Haton de la, (1885), "Exploitation des Mines," Vol. II., p. 696. Description of rolls. Mathematical discussion of angle of nip.
9. Hunt, R., (1884), "British Mining," p. 721. Comparison of English, German, and French types. Gives example showing dimensions, speed, sizes of feed and product, capacity, wear and cost of crushing. Sizing tests and tables of dimensions, speed, capacity and power.
10. Kirschner, L., (1898), "Erzaufbereitung," Part I., p. 50. Description of three types of rolls and arrangement for graded crushing.
11. Kunhardt, W. B., (1893), "Ore Dressing," p. 21. Work adapted for. Arrangement in mill. Choice and management of roll shells. Discussion of best circumferential velocity and sizes to be used.
12. Lamprecht, R., (1888), "Kohlenaufbereitung," p. 8. Description of rolls used for crushing coal.
13. Linkenbach, C., (1887), "Aufbereitung der Erze," p. 30. Principle. Directions for selecting and running. Description. Dimensions. Capacity. Power. Size of product. Wear.
14. Louis, H., (1894), "Gold Milling," p. 244. Suitability for gold ores. Description, capacity and power for Krom's rolls. Comparisons with stamps.
15. Peters, E. D., Jr., (1895), "Copper Smelting," p. 129. Essentials of good rolls. Directions for running rolls.
16. Phillips, J. A., (1887), "Metallurgy," p. 772. Description of Krom's rolls.
17. Rittinger, P. R. von, (1867), "Aufbereitungskunde," p. 24. Mathematical discussion of action. Discussion of dimensions, capacity, power and wear. Description of geared rolls mounted on wooden frame. Description of usual type of Cornish rolls with springs. Different styles of gearing and of feeders are described. Arrangement for double rolls and for fine rolls.
18. *Ibid.*, (1870), "Erster Nachtrag," p. 1. Description of rolls with fluted surfaces.
19. *Ibid.*, (1873), "Zweiter Nachtrag," p. 1. Mathematical discussion of arrangement of rolls.
20. Rose, T. K., (1894), "Gold," p. 206. Description of Krom's rolls. Points on selecting and running rolls. Capacity. Wear. Comparison between rolls and stamps.
21. Stetefeldt, C. A., (1895), "Lixiviation," pp. 9, 183. Advantages and capacities of rolls in crushing for leaching.
22. Zirkler, H., (1895), in "Berg. u. Hüttenwesen des Oberharzes," pp. 215-218. Sizes of feed and sizes of rolls used in Germany.

---

23. *Am. Inst. Min. Eng.*, Vol. VI., (1877), p. 470. J. C. F. Randolph. Description and capacity of rolls at Clausthal.
24. *Ibid.*, Vol. IX., (1881), p. 461. S. Stutz. Mathematical consideration of angle of nip, of capacity, and of power of rolls crushing coal.

25. *Ibid.*, Vol. XIII., (1884), p. 114. C. A. Stetefeldt. Figures on capacities and costs showing the advantages of Krom's rolls over stamps at Bertrand Mill in Russell process.
26. *Ibid.*, Vol. XIV., (1885), p. 497. S. R. Krom. Improvements made in Cornish rolls. Advantages of Krom's rolls over stamps both in principle and in actual tests for capacity and power.
27*a*. *Ibid.*, Vol. XIX., (1890), p. 414. E. B. Coxe. Description of corrugated rolls for coal used at Drifton.
27*b*. *Ibid.*, Vol. XXI., (1892), p. 521. Axel Sahlin. Gives sizing tests and figures on capacity, power, and wear to show the advantage of rolls over Sturtevant mills for crushing iron ore. Points on designing rolls are given.
28. *Ibid.*, p. 530. S. R. Krom. Shows by sizing tests and by figures on power and wear, the superiority of rolls over Sturtevant mill.
29. *Ibid.*, p. 533. Discussion of two preceding articles.
30. *Ibid.*, Vol. XXVI., (1896), p. 599. C. W. Goodale. Comparative sizing tests on Butte ore crushed by steam stamps and by rolls. Comparative costs of rolls and Huntington Mills for crushing middlings. Costs of different materials for roll shells.
31. *Ann. des Mines*, Series VI., Vol. XIX., (1871), p. 299. A. Henry. Short description and discussion of the work for which rolls are adapted.
32. *Berg. u. Hütt. Jahrb.*, Vol. XXVI., (1878), p. 177. J. Habermann. Comparison of stamps and rolls at Przibram and outline of works containing rolls.
33. *Ibid.*, Vol. XXVII., (1879), p. 96. J. Habermann. Rolls in a lead mill.
34. *Ibid.*, Vol. XXVIII., (1880), p. 214. J. Habermann. Rolls in a mill designed for graded crushing.
35. *Ibid.*, Vol. XXX., (1882), p. 1. J. Habermann. Tests showing advantages of crushing by rolls over crushing by stamps.
36. *Ibid.*, p. 14. J. Habermann. Dimensions of rolls at Przibram.
37. *Ibid.*, Vol. XXXI., (1883), p. 207. J. Habermann. Comparisons of capacity, power, wear, cost and extraction between rolls and several grinders.
38. *Ibid.*, Vol. XXXIII., (1885), p. 155. J. Habermann. Description and dimensions of rolls at Raibl. One roll has flanges at the ends between which the other narrower roll runs.
39. *Ibid.*, p. 158. J. Habermann. Dimensions and wear of shells made in two sections, being cut at right angles to the axis.
40. *Ibid.*, Vol. XXXIV., (1886), p. 125. J. Habermann. Description of Przibram type of rolls, of Schwarzmann's rolls, of Neuerberg's rolls, and of rolls for crushing coal. Empirical rule for diameter of coal rolls.
41. *Berg. u. Hütt. Zeit.*, Vol. XXXII., (1873), p. 343. Abstract from *E. & M. J.*, Vol. XIII., pp. 122, 129.
42. *Ibid.*, Vol. XXXVIII., (1879), p. 1. No author. Description of Thum's compound rolls in which several rolls having axes in a zigzag plane of 45° slope first one way, then the other.
43. *Ibid.*, p. 74. No author. Similar to *Dingler's Polyt. Jour.*, Vol. 229, p. 319.
44. *Ibid.*, Vol. XLV., (1886), p. 145. T. Egleston. Capacity of Krom's rolls. Comparison with stamps.
45. *Ibid.*, Vol. XLVII., (1888), p. 342. Sizing test of rolls product from K. von Reytt's article, *Oest. Zeit.*, Vol. XXXVI., p. 229.
46. *Ibid.*, Vol. XLIX., (1889), p. 141. Luttermann. Apparatus for truing rolls at Clausthal.
47. *Bull. Soc. Ind. Min.*, Series III., Vol. VIII., (1894), p. 527. C. Mouchet. Dimensions, capacity and power of rolls at Vaucron mill.
48. *Coll. Eng.*, Vol. XVII., (1896), p. 154. H. Van F. Furman. General article giving brief description and adaptability for different purposes. Roger's rolls are described.
49. *Coll. Guard.*, Vol. LXXIV., (1897), p. 885. Abstract from *Iron Age*, Vol. LX., October 28, p. 6.
50. *Dingler's Polyt. Jour.*, Vol. 216, (1875), p. 401. No author. Description, capacity, and quality of crushing by Schwarzmann's rolls. In this form a revolving disc roll revolves, by friction, two rolls which are pressed against the two faces of the disc roll.
51. *Ibid.*, Vol. 229, (1878), p. 319. No author. Describes Neuerberg's rolls which have a sliding frame, a yoke and only one spring instead of two.
52. *Electrical Rev.*, Vol. XXVI., (1897), p. 203. S. H. Goddard. Description of Edison's special forms of rolls.
53. *Engineering*, Vol. LXIV., (1897), p. 579. No author. Description of Edison's special forms of rolls.
54. *Eng. & Min. Jour.*, Vol. XIII., (1872), pp. 122, 129. G. W. Baker. Krom's improvements in Cornish rolls. Cost. Wear.

55. *Ibid.*, Vol. XVII., (1874), p. 52. No author. Method of casting steel teeth in anthracite rolls.
56. Omitted.
57. *Ibid.*, Vol. XXXVI., (1883), p. 128. No author. Gates rolls are described. Two pairs of rolls, one above the other, and a raff wheel sizes the product and returns the oversize.
58. *Ibid.*, Vol. XXXVIII., (1884), p. 57. No author. Description and capacity of the Geyer rolls. One roll has flanges at its ends between which the other narrower roll runs.
59. *Ibid.*, p. 397. C. A. Stetefeldt. Similar to *A. I. M. E.*, Vol. XIII., p. 114.
60. *Ibid.*, Vol. XXXIX., (1885), p. 245. No author. Description of rolls with finger gears made by Fort Scott Machine Works.
61. *Ibid.*, Vol. XL., (1885), p. 257. S. R. Krom. Extracts from *A. I. M. E.*, Vol. XIV., p. 497.
62. *Ibid.*, p. 305. No author. Description of rolls with finger gears made by J. W. Jackson.
63. *Ibid.*, Vol. XLIX., (1890), p. 735. No author. Description of Bower's rolls. One roll has a concave surface, the other a convex.
64. *Ibid.*, Vol. LIX., (1895), p. 561. No author. Description of Reliance belted rolls made by E. P. Allis Co.
65. *Ibid.*, Vol LX., (1895), p. 587. No author. Description of Roger's improved crushing rolls.
66. *Ibid.*, Vol. LXI., (1896), p. 159. No author. Description of Davis rolls.
67. *Ibid.*, Vol. LXII., (1896), p. 146. No author. Gives capacity of rolls at Florence, Colo., and the effect of forcing rolls to do hard work.
68. *Ibid.*, Vol. LXIII., (1897), p. 480. No author. Description of corrugated rolls speeded differentially and having the corrugations of different shape on the two rolls and crossing each other at an angle.
69. *Inst. Civ. Eng.*, Vol. CVIII., (1892), p. 97. A. H. Curtis. Description, dimensions, capacity, power, wear, advantages and adaptability of Krom's rolls. Comparison with stamps. Advantages of graded crushing.
70. *Inst. Mech. Eng.*, (1873), p. 119. H. T. Ferguson. Description and dimensions of rolls in Cornwall using lever and weight.
71. *Iron*, Vol. VI., (1875), p. 8. No author. Description of Milburn's crusher, which consists of two square shafts acting as rolls above and a pair of toothed rolls below.
72. *Ibid.*, Vol. XXI., (1883), p. 55. No author. Description of the Odell roller mill which has special arrangements for fine grinding.
73. *Ibid.*, Vol. XXXVI., (1890), p. 178. No author. Description of Krom rolls and advantages over stamps.
74. *Iron Age*, Vol. LX., (1897), October 28, p. 6. No author. Description of Edison's special forms of rolls.
75. *Iron and Coal Trade Rev.*, (1897), p. 477. F. Toldt. Composition and casting of chilled iron shells.
76. *McClure's Mag.*, (November, 1897), p. 75. Description of Edison's special forms of rolls.
77. *Min. Ind.*, Vol. I., (1892), p. 253. L. Janin, Jr. Advantages of dry crushing by rolls for cyanide process.
78. *Ibid.*, Vol. V., (1896), p. 263. J. E. Rothwell. Directions for care and adjustment of rolls for fine crushing for chlorination.
79. *Min. Jour.*, Vol. XLI., (1871), p. 276. J. Darlington. General article giving descriptions, dimensions, capacity, power, wear and cost.
80. *Min. & Sci. Press*, Vol. LX., (1890), p. 229. No author. Description of Eckart belted rolls made by Union Iron Works.
81. *Ibid.*, Vol. LVIII., (1894), p. 49. No author. Description of Wall's finger gear rolls. These have intermeshing corrugations on the surfaces of the shells.
82. *Ibid.*, Vol. LXXIV., (1897), p. 433. No author. Description of Roger's rolls.
83. *Ibid.*, p. 458. No author. Description of Edison's special forms of rolls.
84. *North Eng. Inst. Min. & Mech. Eng.*, Vol. XLIII., (1893-4), pp. 346, 348. A. G. Charleton. Comparison with Sturtevant mill and with stamps with regard to principle of action, capacity, cost, wear, quality of work, applicability to different ores, etc.
85. *Oest. Zeit.*, Vol. XXVII., (1879), p. 234. J. Habermann. Description of conical roll shells used at Przibram.
86. *Ibid.*, Vol. XXIX., (1881), p. 677. W. R. Schürmann. Improvements in crushing rolls.
87. *Ibid.*, Vol. XXXI., (1883), p. 31. J. Habermann. Description, capacity, power and cost of double rolls at Przibram.

88. *Ibid.*, Vol. XXXVI., (1881), p. 229 *et seq.* K. von Reytt. Elaborate article showing relations between power used and the quality of the product in crushing by rolls and other machines.
89. *Ibid.*, p. 456. C. Barth. Comparison of Krom's rolls with stamps.
90. *Ibid.*, Vol. XLV., (1897), p. 381. Abstract from *Iron & Coal Trade Rev.*, 1897, p. 477.
91. *Prod. Gold & Silver in U. S.*, (1883), p. 738. C. A. Stetefeldt. Comparison of stamps and Krom's rolls with respect to cost of erection, and wear and tear.
92. *Raymond's Rep.*, (1876), p. 419. S. R. Krom. Improvements made in Cornish rolls. Comparison with stamps. Figures for wear.
93. *Second Geol. Survey Pa.*, (1883), Vol. AC., p. 466. H. M. Chance. Description of spiked rolls used for coal.
94. *Thon-Ind. Zeit.*, Vol. XV., (1891), p. 83. A. von Pein. Description of rolls which use no springs, but have tension rods constructed as breaking pieces in case the pressure becomes too great.
95. *Ibid.*, Vol. XVIII., (1894), p. 628. Mr. Hotop. Description of an oscillating ram used to push clay into rolls to hasten the crushing.
96. *Ibid.*, Vol. XIX., (1895), p. 622. No author. Description of finger-geared rolls in which the two bolts for setting the spaces are connected by chain and sprocket to give equal motion.
97. *Zeit. Berg. Hütt. u. Salinenwesen*, Vol. XXVI., (1878), p. 133. E. Althans. Historical review of development. Description and dimensions of Krom's rolls and of coal rolls.
98. *Zeit. Ver. Deut. Ing.*, Vol. XXV., p. 271.

CHAPTER IV.

STEAM, PNEUMATIC AND SPRING STAMPS.

§ 106. STAMPS—THEIR PRINCIPLE, PURPOSE AND CLASSIFICATION.—Stamps are probably the oldest devices for fine crushing preparatory to concentration. They are used both with and without water, but chiefly with water when crushing preparatory to concentration. While the earlier forms were very crude and inefficient, the later types show great perfection. They occupy in the scheme of mill work the position either of final crushers or of auxiliary crushers.

In all forms of stamps the crushing is done by the blow struck by a pestle or stamp upon the rock which is resting in a mortar. The stamp invariably comes down with accelerated motion, reaching its maximum velocity at the moment it strikes the blow. The momentum of the stamp is then spent in crushing the rock. It follows that the main wear will come upon the end of the stamp and upon the bottom of the mortar; these parts are made replaceable and are called shoe and die respectively.

Stamps are best fed with a product which has a uniform maximum size of lumps, such as will be received from a breaker. Automatic feeders are therefore not only practicable but advantageous.

The product of stamps passes usually through a screen, and the larger fragments are retained in the mortar until they are crushed small enough to pass through. Stamps are especially applicable to crushing ores of gold and silver preparatory to amalgamation and concentration, native copper rock preparatory to concentration, and a variety of ores, such as cassiterite, chromite, graphite, etc., preparatory to concentration. Stamps are particularly useful where fine crushing in one operation is desired. They are not suitable for crushing ores in which the valuable mineral is coarsely disseminated and friable.

According to the mode of applying power for striking the blow, stamps are divided into:

(*a*) *Steam stamps,* which are lifted and forced down by a steam piston.

(*b*) *Pneumatic and spring stamps,* in which the power for lifting and forcing down the stamp is applied by a crank, while the shock to the machine and the variation of length of stroke are taken up by an air cushion or by a spring.

(*c*) *Gravity stamps,* which are lifted by cams and allowed to fall by their own weight. The velocity of fall of gravity stamps is limited to that which can be acquired from gravity. The velocity of the other stamps is limited by the amount of wear to which it is economical to subject the machinery and the mortar.

STEAM STAMPS.

§ 107. PRINCIPLES OF ACTION.—These machines consist of a vertical stamp shaft which is forced down to strike its blow, and lifted up preparatory to striking the next, by a steam piston. The stamping is done in a mortar provided with a screen to prevent the particles from issuing until they are reduced to standard size. The blow is received upon a die placed in the bottom of the mortar. The ore, being on the die, is broken small by the blow. Water is fed

with the rock. The large machines are of enormous capacity, and with these the limiting screen has holes $\frac{3}{16}$ inch (4.76 mm.) in diameter or larger.

Six designs of large steam stamps have been put in use in the mills: The Ball (Fig. 65), the Leavitt (Figs. 66*a*, 66*b* and 66*c*), the Allis (Fig. 67), the Fraser & Chalmers, the Union Iron Works (Fig. 68), and the Cuyahoga. The Ball stamp was the first to gain a permanent foothold and was for many years the standard machine in the Lake Superior copper mills. The Leavitt stamp was designed to give a more economical use of steam and a more efficient blow. The Allis stamp was designed to give a very powerful blow, and to use a more effective mortar bed. Of later construction are the Fraser & Chalmers, the Union Iron Works, which are almost identical stamps, and the Cuyahoga. The six types of stamps have so much in common that they will be described as one machine except where differences call for special remark.

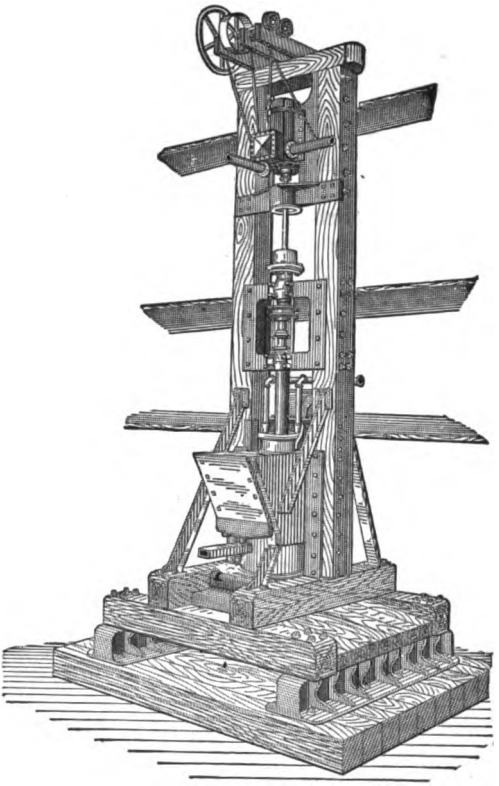

FIG. 65.—BALL STEAM STAMP.

§ 108. FOUNDATION, MORTAR BEDS AND SILLS AND GIRDERS.—For the foundation, bed rock is leveled off or a concrete bed is made. Upon this is placed a timber foundation made of square timbers lying close together in layers, those of one layer being at right angles to those above and below it, and the whole bolted together with vertical 2-inch bolts. The timbers in a layer are often placed 2 inches apart with the spaces filled up with cement.

For mortar beds, the Ball, the Fraser & Chalmers, and the Union Iron Works stamps have comparatively small blocks of cast iron on which the mortars stand. The weights of these mortar beds are sufficient to absorb only a small portion of the effect of the blow, and on this account it is considered necessary to place under them spring timbers of oak (see Fig. 65). The earlier Leavitt stamps used the same combination. The spring timbers are, on native copper rock, a source of serious expense, being made of the finest white oak, and lasting only about three months. The Allis stamp substituted for the light block and spring timbers a mortar bed built up of several blocks of cast iron weighing 60 to 90 tons in all, resting directly upon the foundation. They are 12×10 feet below and narrow upward to 4×6 feet. With this improvement the capacity in rock crushed per 24 hours was increased about 25%. The Leavitt stamp followed with mortar beds of 120 tons each with the same result, so that the introduction of heavy mortar beds has completely obviated the necessity for spring timbers, and in most cases replaced them. The Cuyahoga bed is similar to the Allis.

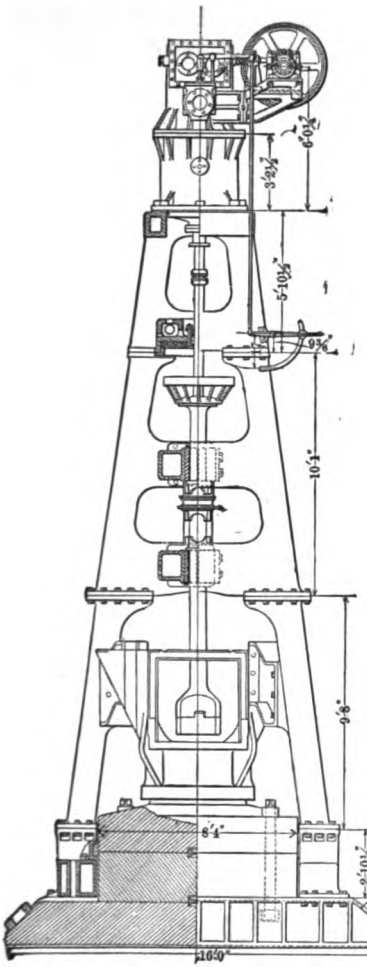

FIG. 66*a*.

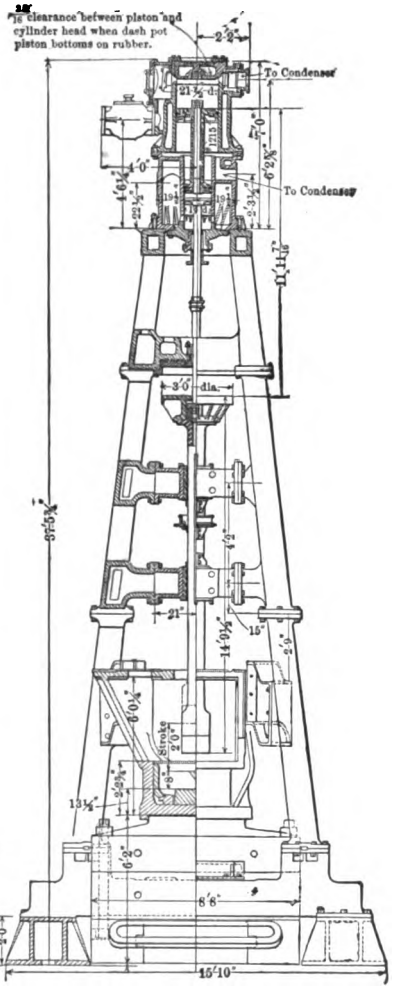

FIG. 66*b*.

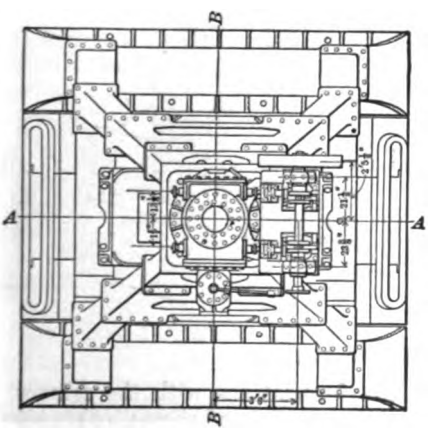

FIG. 66*c*.

FIG. 66*a*.—PARTIAL SECTION OF LEAVITT STEAM STAMP ON LINE *AA* OF PLAN AND PARTIAL ELEVATION.

FIG. 66*b*.—HALF SECTION ON LINE *BB* AND HALF ELEVATION.

FIG. 66*c*.—PLAN.

Fraser & Chalmers placed a rubber cushion 1 inch thick between the mortar bed and the spring timbers. Table 59 contains some details of foundations and mortar beds.

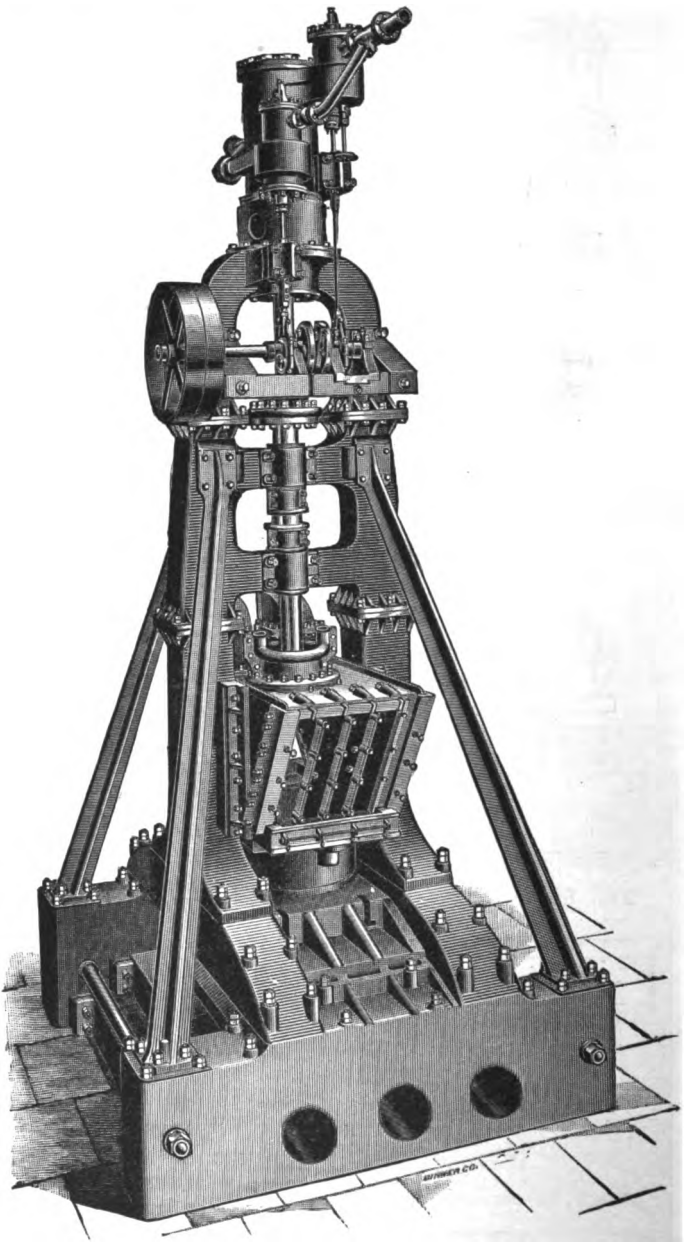

FIG. 67.—ALLIS STEAM STAMP.

The sills and girders serve to connect the foundations with the frames. In all but the Leavitt and Allis stamps there are three sets of these: (*a*) two main sills resting on the foundation at right angles to the top timbers, (*b*) two first

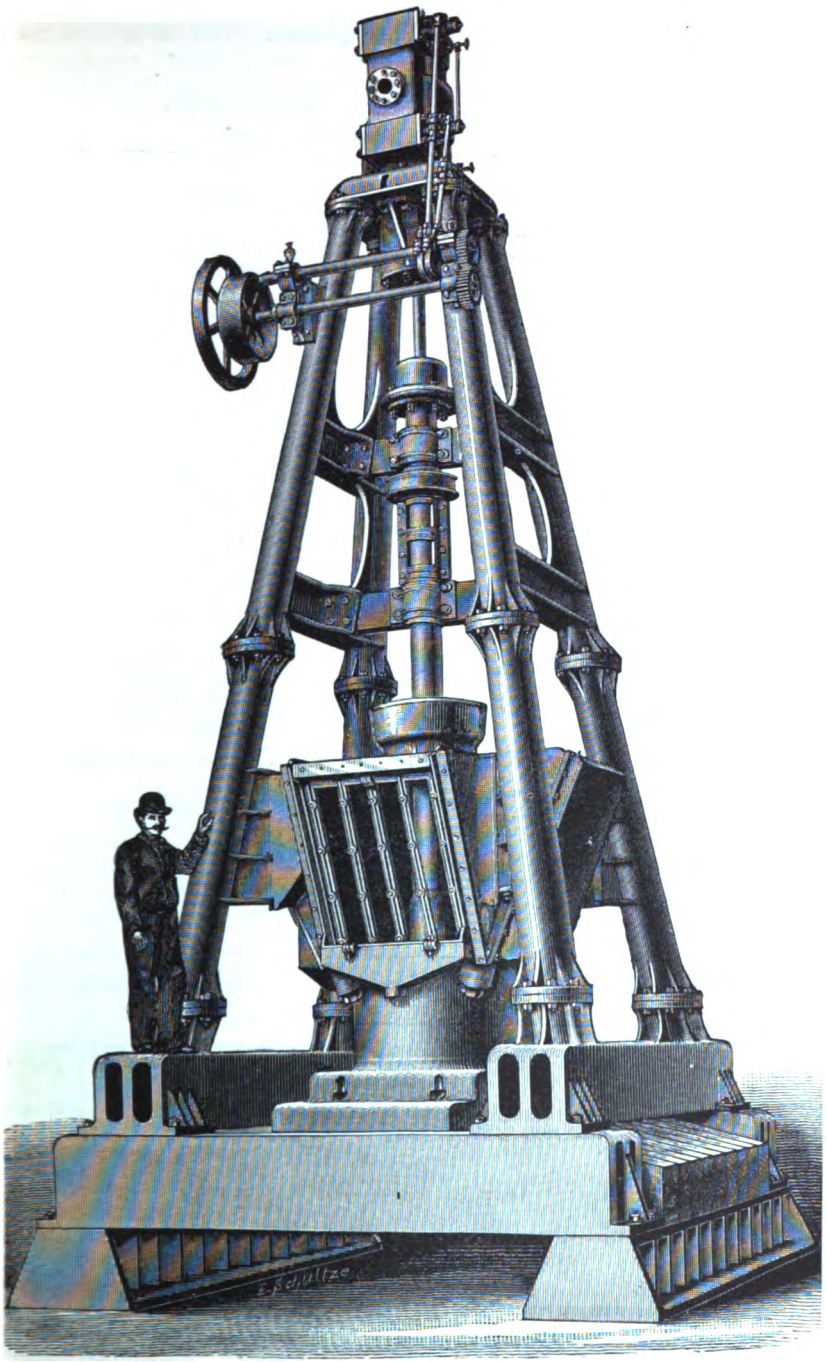

FIG. 68.—UNION IRON WORKS STEAM STAMP.

girders resting on the two main sills and at right angles to them, (*c*) two second girders resting on the first girders and at right angles to them. The

Leavitt and Allis stamps omit the two second girders. The details of these for each design of stamp are given in Table 60.

TABLE 59.—FOUNDATIONS AND MORTAR BEDS.

Abbreviations.—Ft.=feet; In.=inches; Lb.=pounds.

Mill No.	Number of Stamps Used.	Design of Stamp.	Foundation rests on	Foundation.	Mortar Bed.	Spring Timbers.
42	4	Fraser & Chalmers and Union Iron Works, treating hard ore.....	.....	14 x 14-in. timbers with 2 in. of cement between them. 12 ft. long 12 ft. wide.	Blocks weighing 78 tons (see Fig. 69). 1=22,500 lbs. (1 piece); 2=62,400 lbs. (2 pieces); 3=71,400 lbs. (3 pieces).	8 white oak timbers 14 ft. long, 16 in. deep, 14 in. wide. Last 1 year.
42	4	Ditto, treating soft ore.....	.....	"	"	"
42	1	Ball, treating middlings.....	.....	.....	.....	"
43	1	Fraser & Chalmers.....	.....	Same as Mill 42.	Same as Mill 42.	8 white oak timbers (see Fig. 71). Last 6 years.
44	11	Leavitt.....	Concrete, 26 ft. long, 20 ft. wide, 2 ft. deep.	Timber block 26 ft. long, 20 ft. wide, 15 ft. deep.	Weighs 120 tons (see Fig. 70). 1=cylinder 4 ft. diameter and 4 in. high; 2=8 ft. 8 in. x 8 ft. 3 in. x 1 ft. 6 in.; 3=8 ft. 8 in. x 8 ft. 3 in. x 2 ft.; 4=8 ft. 8 in. x 16 ft. x 1 ft. 10 in. (3 pieces).	Formerly used and lasted 3 months.
46	4	Ball.....	Natural sandstone bed rock.	Timber and cement block 15½ ft. long, 14½ ft. wide, 12½ ft. deep.	Under 2 stamps (those with spring timbers) blocks weigh 20 tons each. Under 2 stamps 60 tons each.	Only 2 stamps, use spring timbers which last 3 months.
46	1	Cuyahoga.....	"	"	Blocks weighing 60 tons.	None used.
46	1	Allis.....	"	"	"	"
47	5	Allis.....	Concrete.	Timber block.	Blocks weighing 90 tons, 12 x 10 ft. at the base.	"
48	5	Allis.....	Same as Mill 46.	Same as Mill 46.	Weighs 60 tons.	"

TABLE 60.—SILLS AND GIRDERS.

Abbreviations.—Ft.=feet; In.=inches.

Design of Stamp.	The two main Sills.	The two first Girders.	The two second Girders	The Frame stands on
Ball.....	Flanged iron sills held to timber block by 18 bolts.	Wooden timbers 14 in. wide, 18 in. high, each fastened to sills by 8 bolts.	Wooden timbers, each fastened to first timbers by 4 bolts.	The two second girders.
Leavitt.....	Flanged tubular sills of cast iron 16 x 3½ x 2 ft. high. 12 ft. 3 in. center to center.	Cast-iron double tubular girders each held to the sills by twelve 1½-in. bolts. 10 ft. center to center.	None used.	Pedestals 2 ft. x 1 ft. 8 in. x 1 ft. 4 in. high, cast upon the two first girders.
Allis.....	Flanged tubular sills 14 ft. 3 in. x 1 ft. 9½ in. x 3 ft. 8 in. high, each held down by sixteen 2-in. foundation bolts. 12 ft. 3½ in. center to center and held together by two 4-in. tie-bolts.	Cast-iron girders 14 ft. 2 in. x 1 ft. 9 in. x 2 ft. high, rounding off at the ends, each held down by eight 1¾-in. bolts.	None used.	The two first girders.
Fraser & Chalmers.....	Flanged ribbed sills, each held down to the wooden block by 12 bolts.	Double tubular girders, each held down by 8 bolts.	Double tubular girders, each held down by 16 bolts.	Pedestals cast on the second girders.
Union Iron Works.....	Flanged ribbed sills held down by bolts.	Double tubular girders, each held down by 8 bolts.	Double tubular girders, each held down by 8 bolts.	Pedestals cast on the second girders.

§ 109. FRAME.—The Ball stamp frame (see Fig. 65) consists of two heavy vertical timbers with cross-timbers upon which are placed the stamp shaft guides,

the piston rod guide, the cylinder and the valve gear. These timbers stand upon and are strongly braced to the upper girders.

The Leavitt stamp frame (see Figs. 66*a* and 66*b*) consists of four posts of cast iron standing upon and bolted to pedestals on the ends of the two first girders. These posts lean toward the center so that the top is 44% of the width of the bottom. The frame is in three sections, lower, middle and upper, with suitable cross-bars, flanged and bolted together. The middle part carries the

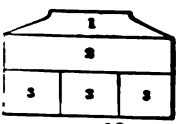

FIG. 69.

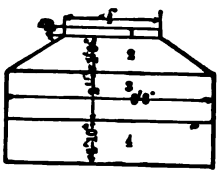

FIG. 70.

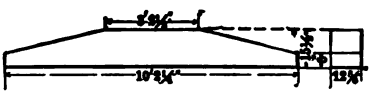

FIG. 71.

FIG. 69.—MORTAR BED OF FRASER & CHALMERS STAMP. FIG. 70.—MORTAR BED OF LEAVITT STAMP. FIG. 71.—SPRING TIMBER IN MILL 43.

guides, the upper carries the dash pot and piston rod guide, the cylinder and valve gear.

Fraser & Chalmers, Union Iron Works, and the more recent Ball, use this same frame.

The Allis stamp (see Fig. 67) consists of two heavy cast-iron posts with cross-bars, made up of three sections, lower, middle and upper, flanged and bolted together. The lower part is widened to give a stable foot. The middle part carries the guides. The upper part carries the valve gear, the steam cylinder and the piston rod guide. The frame is braced from the upper ends of the middle part to the ends of the sills by four iron braces.

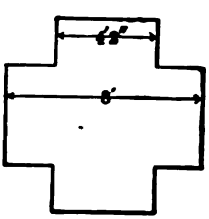

FIG. 72.

The frames of the original Ball and of the Allis stamps admit of screens on two sides of the mortar only; that of the other three allow screens on all four sides, if desired.

§ 110. MORTAR AND SCREENS.—The mortar is in two parts: the mortar proper, which is below and takes most of the wear, and the mortar housing which is above and confines the splash.

The mortar proper is a cylindrical pot of cast iron (see Figs. 66*a*, 66*b*, and 67). Upon the mortar proper, and bolted to it, stands the mortar housing which in the Ball and Allis stamps is wedge-shaped, with two sides vertical, and the other two sides sloping inward downward to suit the screens. This housing is built up of castings and plate iron riveted together, and on the two sloping sides it is provided with screen frames, and outside the screen frames it is closed in with shields (see Fig. 65), and has a discharge spout below out through which the stamp stuff which passes through the screens is discharged. In the Leavitt, the Fraser & Chalmers, the Union Iron Works and the Cuyahoga stamps, the four sides of the mortar housing slope downward and inward to suit the screens, and the housing has four re-entering angles to give room for the four posts. This combination gives the section of the top of the housing the form of a cross (see Fig. 72). The housing is closed in on top with an iron cover with three holes in it, one for the stamp shaft, one for the feed hopper, and one for the water pipe. The housing has a lining in two parts, upper and lower, the lives of which, for the Ball stamp, are shown in Table 61.

TABLE 61.—MORTAR HOUSING LININGS FOR BALL STAMP.[12]

Mill.	Upper Lining.			Lower Lining.		
	Material.	Thickness.	Life.	Material.	Thickness.	Life.
		Inches.	Months		Inches.	Months
Calumet & Hecla..	Wrought iron.....	.....	6	Chilled cast iron.....	.....	3
Allouez.....	Chilled cast iron.....	1	8	Chilled cast iron.....	1	4
Atlantic.....	Wrought iron.....	½	12	Wrought iron.....	½	6

The details of the mortar proper are shown in Table 62, and those of the mortar housing in Table 63.

TABLE 62.—DETAILS OF THE MORTAR PROPER.

Mill No.	Design of Stamp.	Inside Diameter.	Depth.	Thickness of Sides.	Thickness of Bottom.
		Ft. In.	Inches.	Inches.	Inches.
42, 43	Fraser & Chalmers	3 6	20½	3	5
44	Leavitt.....	3 7	21	5	5½
46	Ball.....	3 6½	.....	3	5
46, 48	Allis.....	3 6½	23	3	5

TABLE 63.—DETAILS OF THE MORTAR HOUSING.

Design of Stamp.	Outside Height.		Outside at Top.		Outside at Bottom.	
			Length.	Width.	Length.	Width.
	Ft.	In.	Ft. In.	Ft. In.	Ft. In.	Ft. In.
Allis.....	4	2	8 11½	x 4 6	5 2½	x 4 6
Leavitt.....	3	9½	8 0 4 2	x 8 0* x 4 2*	4 8	x 4 8

* See Fig. 72.

The screens are of steel plate punched with holes that are usually round. The screen frame (see Fig. 67), is of cast iron with vertical bars, commonly three, running from the top part to the bottom part of the frame; this gives four panels in which the four parts of a screen plate are fastened with bolts and binders. The screen frame is bolted to the housing upon a face trued to receive it. Spare screen frames with screens upon them are kept on hand to save time in changing. When the lower part of a screen plate is too much worn, it is turned end for end and what was the upper end is placed below to take the wear. The details of screens and their life are given in Table 64.

§ 111. Die, Ring, Staves and Shoes.—In the mortar (see Fig. 66*b*), is placed a die which is a flat disc in the form of a truncated cone with the smaller diameter uppermost. This receives the blow and bottom wear. Around the die is placed a ring, which serves to fill the space and to support the staves which are in section wedge-shaped and lie together around the circle like arch bricks. The staves take the side wear. The last stave put in, called the key stave, is a reversed wedge, and is held in place by a bolt through the sides of the mortar. The two adjacent staves have special forms to conform to this key.

The shoes (see Fig. 80) are in geometrical form, namely, cylindrical discs from which two opposite segments have been removed; this makes a long and

TABLE 64.—DETAILS OF SCREENS.

Abbreviations.—C. S. P.=cast-steel plates; Cuy.=Cuyahoga; Deg.=Degrees; F. & C.=Fraser & Chalmers; In.=inches; No.=number; R.=round; S.=slots; Scr.=screen; S. P.=steel plate; Sq. In.=square inches; Stam.=stamps; U. I. W.=Union Iron Works; Vert.=vertical; V. S.=vertical slots.

Mill No.	No. of Stam. Used.	Design of Stamps	Slope of Scr. from Vert. Deg.	Material.	Thickness. In.	Hole. Kind.	Hole. Size. In.	Area of Screen. In.	No. of Screens in Frame.	No. of Frames in Stamp.	Total Screen Area. Sq. In.	Life. Days.	Life. Tons.
38	1	F.& C..	.....	S. P.	.....	R.	⅛, ¾	.....	4	2	.....	.....	.....
42	4	(a)	27	"	3/16	V.S.	⅝ x 3/16	8 x 48	4	2	3,072	60	.....
42	4	(b)	27	"	3/16	R.	⅛	8 x 48	4	2	3,072	60	.....
42	1	Ball (c).	.....	"	3/16	V.S.	⅝ x 3/16	8 x 48	4	2	3,072	60	.....
43	1	F.& C..	12	"	3/16	R.	7/16, 3/16, ¾	(d) 7 x 41	3	4	2,340	.....	.....
44	11	Leavitt	27	"	0.109	R. (e)	3/16	8½ x 44	4	4	5,984	(f) 30	7,600
45	3	Ball....	.....	(g)	.....	.....	.....	.....	.....	.....	.....	12	1,800
46	4	Ball....	22	S. P.	0.107	R. (e)	3/16	(h) 8½ x 45 net	4	2	3,060	(i) 24	6,300
46	1	Cuy.....	22	"	0.107	R. (e)	3/16	(h) 8½ x 45 net	4	4	3,060	(i) 24	9,360
46	1	Allis....	22	"	0.107	R. (e)	3/16	(h) 8½ x 45 net	4	2	3,060	(i) 24	10,800
47	5	Allis....	27	"	.....	R.	3/16	.....	4	2	.....	30 to 40	.....
48	5	Allis....	22	.....	0.107	R. (e)	3/16	(h) 8½ x 45 net	4	2	3,060	18	5,400
j	4	Ball....	.....	C.S.P. f	.....	S. (f)	f ⅛ x 3/16	(f) 9½ x 48	4	2	3,196	42	8,820

(a) F. & C. and U. I. W. on hard ore. (b) Ditto on soft ore. (c) On middlings. (d) 1 inch lap all around. (e) Three-eighth inch center to center. (f) Quoted from Sharpless.[20] (g) Weighs 10 pounds. (h) One-half inch lap all around. (i) Then patched and wears 6 days more. (j) Atlantic.

narrow shoe along the sides of which rock can settle to be crushed later as the stamp rotates to new positions. Since the outside margin of the shoe does the main work of crushing and in consequence wears faster than the center, it is common to make a slight depression in the center of the shoe to equalize the conditions. Fraser & Chalmers make this depression in the form of an ellipse with axes 13 and 8 inches long. Its depth is one inch at the center and tapers to 0 at the edges. Upon the top of the shoe is a dovetail which is straight on one side and curved on the other. This finds its counterpart in the stamp shaft. The spare space is taken up by driving in a key with shims along the straight face.

In changing a shoe when it is worn out, the stamp is stopped and lowered so as to rest on the rock. The key is driven out and the shims are removed. The stamp shaft is now lifted by steam pressure, the old shoe removed, and a new one put in. The shaft is lowered, the dovetail entered, the shims and key put in. The stamp is now lightly dropped a few times to set the shims. If needed, more shims are put in and the key set up hard. The stamp is now raised, "cōver work"* removed, screens replaced and stamping resumed.

The die, ring, staves and shoes are all made of a fine chilled cast iron, cast from mottled and white charcoal pig capable of taking a very deep chill, and they cost at Butte, for instance, about 4 cents a pound. The rejected worn-out parts at both Lake Superior and Butte are shipped back to the foundry, and perhaps bring about three-fourths of a cent per pound. This metal has proved far better than any other material to withstand wear of heavy stamps. Table 65 shows the comparison of various metals for shoes in Mill 43. The details of these wearing parts with figures on life and computed wear per ton are given in Tables 66, 67, 68 and 69.

The dies wear down to half, or less, of their thickness, and toward the end of their life to some degree lessen the capacity of the stamp. The wear is comparatively slow, due to the fact that the die is always protected with 4 to 6 inches of rock.

The shoes wear to a form somewhat like that shown by the dotted lines in Figs. 73*a* and 73*b*, and toward the end of the life of a shoe the mortar has to

* The local name for the lumps of copper too large to pass the screen and which accumulate in the bottom of the mortar.

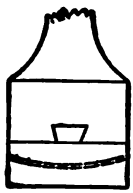

FIG. 73*a*.—SIDE VIEW.

FIG 73*b*.—END VIEW.

be filled fuller with rock in order to reach the shoe. This fact, and the deformed shape of the worn-out shoe, cut down the capacity of the stamp considerably toward the last hours of a shoe.

§ 112. STEAM CYLINDER, VALVE AND VALVE MOTION.—The usual size of Ball stamp has a cylinder 15 inches diameter and practical stroke of about 24

TABLE 65.—METALS FOR SHOES IN MILL 43.

Material.	Average Weight.		Time to Wear Out.	Rock stamped in the Time.
	Beforehand.	Afterward.		
	Pounds.	Pounds.	Hours.	Tons.
Armor plate steel..	340	143	27	175
Forged steel.....	340	143	40	260
Manganese steel...	340	143	42	273
Chilled cast iron...	340	143	60 to 70	450

TABLE 66.—DETAILS OF DIES FROM THE MILLS.

Abbreviations.—In.=Inches; Lbs.=pounds; Mos.=months; No.=number.

Mill No.	Design of Stamp.	Diameter.		Height	Weight.		Life.		Wear of Iron per Ton. (*a*)	
		Lowe.	Upper.		New.	Old.			Gross.	Net.
		In.	In.	In.	Lbs.	Lbs.	Mos.	Tons.	Lbs.	Lbs.
42	Fraser & Chalmers and Union Iron Works, on hard ore.....	22	20	8	650	.....	12	.....	.....	.....
42	Fraser & Chalmers and Union Iron Works, on soft ore.....	22	20	8	650	.....	.....	.....	.....	.....
42	Ball, on middlings.....	.....	.....	.....	450	.....	24	.....	.....	.....
43	Fraser & Chalmers.....	.....	.....	.....	.....	.....	3	13,940	.....	.....
44	Leavitt	21¾	19¾	7½	745	400	6	39,000	0·0191	0·0088
45	Ball	.....	.....	.....	.....	.....	6	22,500	.....	.....
46	Ball	.....	.....	.....	760	175	12	52,500	0·0145	0·0111
46	Cuyahoga	.....	.....	.....	760	175	18	117,000	0·0055	0·0050
46	Allis.....	.....	.....	.....	760	175	16	120,000	0·0063	0·0049
47	Allis	.....	.....	.....	.....	.....	24	180,000	.....	.....
48	Allis	22	20	8	750	100	2½ to 3⅔	18,000 to 26,800	0.0416 to 0.0260	0·0361 to 0·0236

(*a*) Gross wear does not take into account the weight of the worn-out piece, while net wear does.

TABLE 67.—DETAILS OF RINGS FROM THE MILLS.

Abbreviations.—Lbs.=pounds; No.=number.

Mill No.	Design of Stamp.	Weight.		Life.		Wear of Iron per Ton.	
		New.	Old.			Gross.	Net.
		Lbs.	Lbs.	Years.	Tons.	Lbs.	Lbs.
44	Leavitt	856	600	1¼	71,500	0.0120	0.00358
45	Ball.....	.....	.....	½	.....	.....	.....
46	Ball.....	820	415	1	52,500	0.0156	0.0077
46	Cuyahoga.....	820	415	2	156,000	0.0053	0.0026
46	Allis	820	415	Several	.....	.....	.....
47	Allis	.....	.....	Over 5	.....	.....	.....
48	Allis	820	415	4	360,000	0.0023	0.0011

TABLE 68.—DETAILS OF STAVES FROM THE MILLS.

Abbreviations.—In.=inches; Lbs.=pounds; Mos.=months; No.=number.

Mill No.	Design of Stamp.	Number of Staves.	Thickness.	Weight of Each Stave. New.	Weight of Each Stave. Old.	Life. Mos.	Life. Tons.	Wear of Iron per Ton. Gross.	Wear of Iron per Ton. Net.
			In.	Lbs.	Lbs.	Mos.	Tons.	Lbs.	Lbs.
42	Fraser & Chalmers and Union Iron Works, on hard ore	.....	8	.....	.....	.....	.....	.....	.....
42	Fraser & Chalmers and Union Iron Works, on soft ore	.....	8	.....	.....	.....	.....	.....	.....
42	Ball, on middlings	.....	.....	.....	.....	.....	.....	.....	.....
43	Fraser & Chalmers	.....	8	319	.....	6	27,880	0.0114	.....
44	Leavitt	10	.....	154	90	6	39,000	0.0395	0.0164
45	Ball	.....	.....	.....	.....	4	30,000	.....	.....
46	Ball	4	.....	474	250	24	105,000	0.0181	0.0085
46	Cuyahoga	10	.....	190	100	18	117,000	0.0162	0.0077
46	Allis	8	.....	237	125	12 to 15	90,000 to 115,000	0.0210 to 0.0164	0.0099 to 0.0078
47	Allis	.....	.....	.....	.....	24	180,000	.....	.....
48	Allis	8	.....	237	125	12 to 15	90,000 to 115,000	0.0210 to 0.0164	0.0099 to 0.0078

TABLE 69.—DETAILS OF SHOES FROM THE MILLS.

Abbreviations.—In.=inches; Lbs.=pounds.

Mill No.	Design of Stamp.	Dimensions.	Weight. New.	Weight. Old.	Life. Days.	Life. Tons.	Wear of Iron per Ton. Gross.	Wear of Iron per Ton. Net.
		In.	Lbs.	Lbs.	Days.	Tons.	Lbs.	Lbs.
42	Fraser & Chalmers and Union Iron Works, on hard ore	22x14x8	650	150	6	.....	.....	.....
42	Fraser & Chalmers and Union Iron Works, on soft ore	22x14x8	650	150	.....	.....	.....	.....
42	Ball, on middlings	.....	450	.....	30	.....	.....	.....
44	Leavitt	22x14x8½	600	300	5½	1,500	0.40	0.20
45	Ball	.....	500	.....	24	3,600	0.139	.....
46	Ball	22x14x8	700	330	36	6,300	0.0111	0.0587
46	Cuyahoga	22x14x8	700	330	25	6,500	0.108	0.0569
46	Allis	22x14x8	700	330	20	6,000	0.117	0.0617
47	Allis	22x14x8	600	300	15 to 0	4,500 to 6,000	0.133 to 0.100	0.067 to 0.050
48	Allis	22x14x8	700	330	3	900	0.778	0.411

inches (see Fig. 74). A simple slide valve is used which is given accelerated and retarded motion by eccentric gears *BB*, driven from a separate source of power. The eccentric *C* makes its slowest motion when the valve admits steam for the up stroke, and its quickest when it admits steam for the down stroke. The latter is to give quickly a full, wide opening of the valve, admitting almost full boiler pressure for striking the blow. The valve of this stamp, and of the others also, is given a lead for the down stroke which is greater than is customary on ordinary engines, in order to furnish the necessary cushion for stopping the upward movement of the stamp. The retardation of the stamp caused by its striking its blow prevents the lower end of the cylinder from needing any lead at all. The throw and lap of the valve is so adjusted as to give a wide, full opening of the valve at the upper end, and only about $\frac{3}{16}$ inch at the lower. As the piston has no crank motion to stop it at an exact point, its motion being arrested at the top end by steam cushion and at the bottom by the blow on the rock, it requires a large clearance, 2½ inches at the top end and 4 inches at the bottom, with full stroke.

The Leavitt stamp (see Fig. 75) has differential cylinders with two pistons. The upper piston is 21½ inches in diameter; the lower is 14 inches. For the down stroke steam is admitted and exhausted above the upper piston by two grid-

iron valves (see Fig. 76), standing on edge, moving horizontally, opened and shut by two cams each with adjustable cut-off. The cams are driven from an independent source of power. The admission valve cuts off the feed at about 40% of the down stroke. The piston then runs by expansion to the end. The exhaust is opened at the same instant as the blow is given, and on the return the exhaust is closed and the feed opened at about 90% of the return stroke, to cushion the piston. The steam for the return stroke is admitted below the lower piston through a pressure regulator which allows it to pass when the pressure falls below 50 pounds per square inch. The pressure under this lower piston will range from a maximum of 60 to a minimum of 50 pounds per square inch for each stroke, with a mean of 55 pounds. The upper piston therefore always acts against this nearly constant pressure of the lower cylinder. The cylinder has therefore only ½ inch, which is the usual clearance of a carefully made engine, at its upper end, avoiding all the amount of clearance at its lower end due to variable height of rock in the mortar. The steam exhausting from

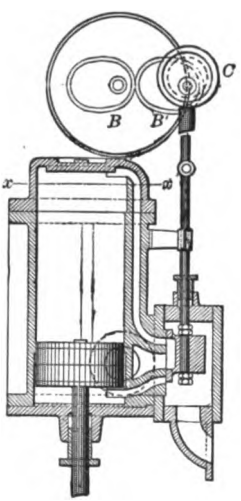

FIG. 74.

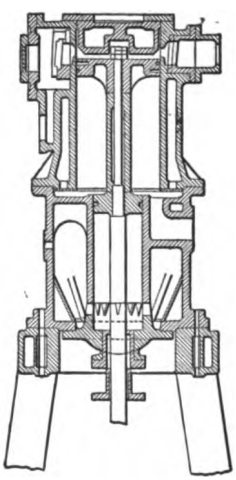

FIG. 75.

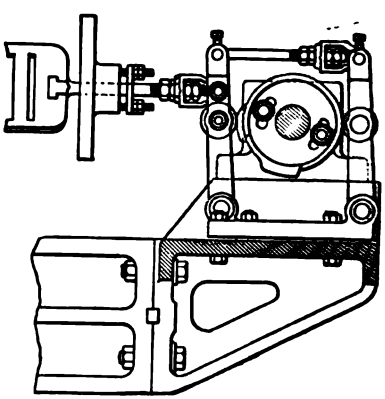

FIG. 76.

FIG. 74.—BALL STEAM STAMP CYLINDER. FIG. 75.—LEAVITT STEAM STAMP CYLINDER. FIG. 76.—VALVE MOTION FOR LEAVITT STAMP.

the upper end of the large cylinder and that which leaks into the between space is exhausted into pipes for heating the mills in winter, and into a jet condenser with air pump in summer, giving a vacuum of 24¾ inches of mercury, equivalent to 12.14 pounds per square inch.

The Allis stamp has a cylinder 20 inches in diameter with a practical stroke of 24 inches (see Figs. 77 and 78). The cylinder is provided with double balanced piston valves at each end; each valve feeds and exhausts the steam at its end. These valves are driven by independent eccentrics. The earlier forms of Allis stamps have rotary valves. The eccentric of the upper valve is driven by a disc and link transmission (see Fig. 67), giving accelerated and retarded motion. The admission is made while the eccentric is at its highest speed, which gives a quick, wide opening of the valve, cutting off at about 33% of the stroke and running by expansion the remainder of the stroke. The exhaust opens when the blow is struck, and the slow motion of the valve comes during the exhaust.

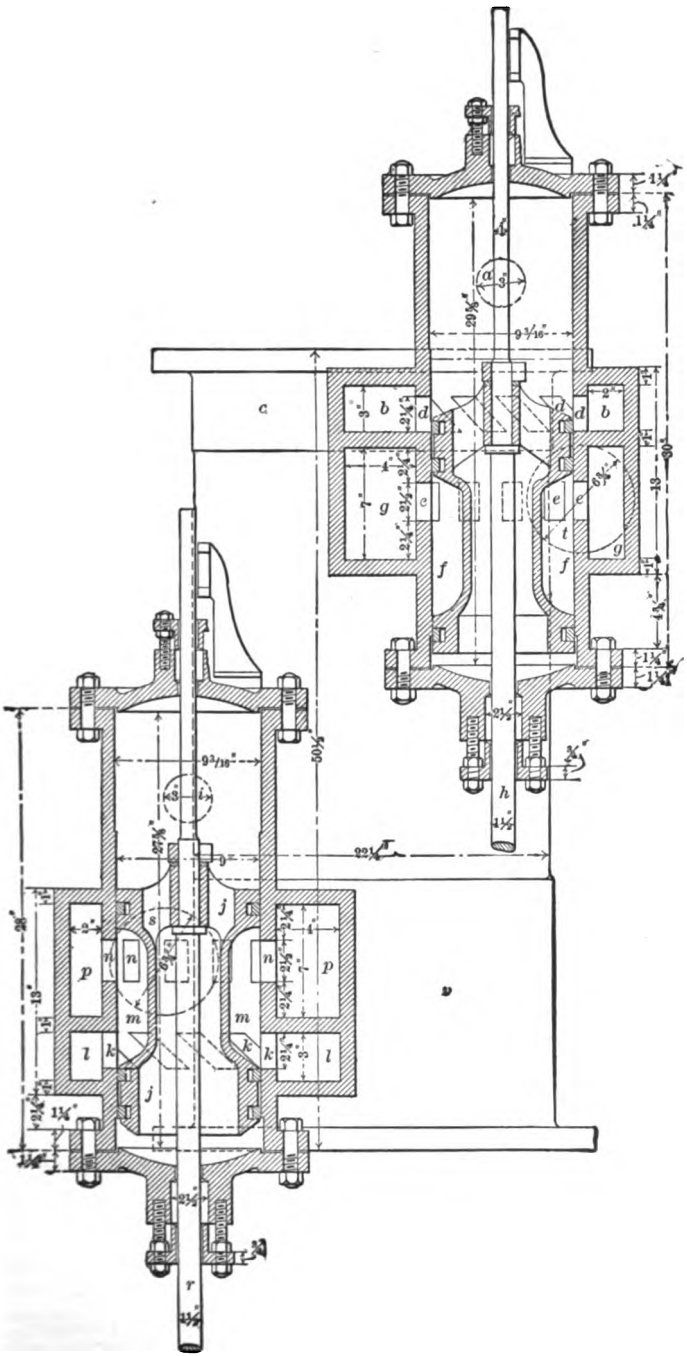

FIG. 77.—SECTION OF VALVES FOR ALLIS STAMP.

The exhaust closes and the feed opens in time to cushion the piston. The valve at the lower end is driven by an ordinary eccentric without acceleration; it admits steam partially throttled for about one-sixth of the stroke, and runs by expansion

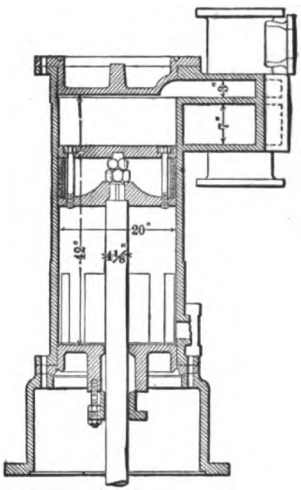

FIG. 78.

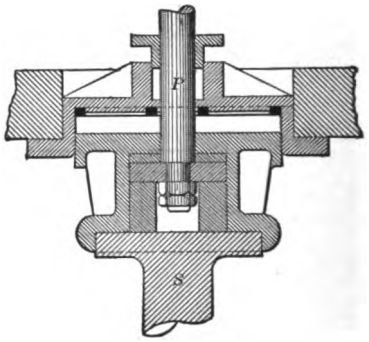

FIG. 79.

FIG. 78.—SECTION OF CYLINDER AND PISTON OF ALLIS STAMP. FIG. 79.—DASH POT FOR LEAVITT STAMP.

the remainder. No steam is admitted below until after the blow is struck. The stamp therefore strikes an entirely uncushioned blow.

The Fraser & Chalmers and Union Iron Works stamps (see Fig. 68) have rotary valves above and below, driven by independent eccentrics, and these are driven by a pair of eccentric elliptical gears, receiving therefrom accelerated and

TABLE 70.—DETAILS OF STEAM CYLINDERS, WATER USED, AND CAPACITY.

Abbreviations.—Gals.=gallons; In.=inches; Lbs.=pounds; Max.=maximum.

Mill No.	Design of Stamp.	Diameter of Cylinder.	Length of Cylinder.	Thickness of Piston.	Diameter of Piston Rod.	Length of Stroke.		Strokes per Minute.	Steam Pressure Per Square Inch.	Revolution of Stamp.	Water Used per Stamp per Minute.	Water Used per Ton of Ore.	Capacity per Stamp per 24 Hours. (a)
						Max.	Actual.						
		In.	In.	In.	In.	In.	In.		Lbs.		Gals.	Tons.	Tons.
38	Fraser & Chalmers	....	....	....	....	....	....	....	....	(b)	....	....	250
42	Fraser & Chalmers and Union Iron Works, on hard ore	15	40	10	....	30	24	90	100	(b)	....	....	....
42	Fraser & Chalmers and Union Iron Works, on soft ore	15	40	10	....	30	24	90	100	(b)	....	....	....
42	Ball, on middlings	15	....	....	....	....	24	....	100	(c)	....	....	....
43	Fraser & Chalmers	11	40	10	....	30	24	95	95	....	....	....	168
44	Leavitt	(d)	39	7	4	24	22	104	(e) 115	(f)	g 1,081	25	260
45	Ball	....	....	7	....	....	....	94	....	....	....	....	150
46	Ball	15	....	7	....	26	24	95	100	(h)	160	5½	175
46	Cuyahoga	18	....	....	....	26	24	95	100	(h)	238	5½	260
46	Allis	20	42	10	4⅛	26	24	95	100	(h)	275	5½	300
47	Allis	i 18,20	42	10	4⅛	26	24	100	100	(f)	....	....	300
48	Allis	20	42	10	4⅛	26	24	98	100-105	(h)	275	5½	300
(j)	Ball	....	....	....	....	....	....	....	....	....	....	....	210

(a) The work of the stamps may vary 25, or even 50, tons from day to day, so that there may be a slight conflict between some of these figures and those stated elsewhere in the book. (b) Accidentally only. (c) By pulley. (d) Upper, 21½; lower, 14 inches. (e) This is for the upper cylinder; the lower is 45 to 55 pounds. (f) By pulley once in six strokes. (g) Coggin,[19] in 1886. (h) By pulley once in 50 strokes. (i) Three stamps are 20 inches and two are 18. (j) Atlantic, quoted from Sharpless.[20]

retarded motion at both ends of the cylinder. The Fraser & Chalmers cuts off at 20 to 30% on the down stroke and 33% on the up stroke.

Details of steam cylinders are given in Table 70. The details of the valve actions showing the times at which the valve motions occur are given in Table 71.

TABLE 71.—DETAILS OF VALVE ACTION.

Mill No.	Design of Stamp.	Kind of Valves.	Upper End.				Lower End.			
			Feed Opens at % of Up Stroke.	Feed Closes at % of Down Stroke.	Exhaust Opens at % of Down Stroke.	Exhaust Closes at % of Up Stroke.	Feed Opens at % of Up Stroke.	Feed Closes at % of Up Stroke.	Exhaust Opens at % of Up Stroke.	Exhaust Closes at % of Down Stroke.
40	Fraser & Chalmers and Union Iron Works, on hard ore	Rotary.	.....	.....	.....	.....	.....	.....	.....	.....
42	Fraser & Chalmers and Union Iron Works, on soft ore	Rotary.	.....	.....	.....	.....	.....	.....	.....	.....
43	Ball, on middlings	Slide.	.....	.....	.....	.....	.....	.....	.....	.....
43	Fraser & Chalmers	Rotary.	.....	(a) End	.....	.....	.....	(a) End	.....	.....
44	Leavitt (b)	Grid-iron.	93	45	End.	93	(c)	(c)	(c)	(c)
46	Ball (b)	Slide.	88	49	End.	61	11	27	End.	End.
45	Cuyahoga	Slide (like Ball).	.....	33	.....	.....	.....	17	.....	.....
46	Allis	Balanced piston.	.....	33	.....	.....	.....	17	.....	.....
47	Allis	Balanced piston.	.....	.....	.....	.....	.....	.....	.....	.....
48	Allis (b)	(d)	93	38	End.	67	11	(e)	End.	End.

(a) Steam is throttled for the whole stroke and there is no expansion. (b) The values for these stamps are calculated from the indicator cards, Figs. 83, 84, 85, 86, 87. (c) There is an almost constant pressure in the lower part of this cylinder all the time. (d) Four balanced piston and one rotary. (e) Wire drawn from 19% to 43% of up stroke.

§ 113. SAFETY DEVICES.—As these machines have no crank and connecting rod to stop the motion at the two ends of the stroke, other means besides the steam cushions already mentioned must be provided, to prevent the piston from going too far.

In the Ball stamp (see Fig. 74), the lower portion of the steam cylinder is counter-bored to about 0.32 inch larger diameter than the remainder, and there is an extension below the port opening into which the stamp can enter and it acts as a dash pot. This will stop the stamp in case the mortar gets empty. This counter-bore, however, seriously increases the clearance. For the upper end of the stroke (see Fig. 65), a guard is provided by a buffer on the upper side of the coupling and an elastic cushion on the cross-bar above to receive it, in case the steam cushion fails to stop the upward motion.

The Leavitt stamp has a plunger and dash pot (see Fig. 79), 3 feet diameter, 3½ inches deep, at the coupling between the piston rod P and the stamp shaft S, which arrests the upward movement, and beneath the small cylinder (see Fig. 75), there is a cup or extension into which the small piston can enter and act as a dash pot in case the mortar gets empty and the stamp tends to fall too far. Neither of these dash pots adds to clearance.

In the Allis, the Fraser & Chalmers, and Union Iron Works stamp, the danger of breakage is averted by a bonnet on the flange at the upper end of the stamp shaft. In this, the flange on the piston rod plays between rubber cushions above and below (see Fig. 80). The rubber cushion for the downward thrust is 4 inches thick and 11 inches diameter; that for the return is an annular disc 2½ inches thick, 11 inches outer diameter, 5 inches inner. Half an inch clear space is left around these two rubber springs. In the walls of the Allis cylinder (see Fig. 78), at its lower end, are eight vertical grooves 1 inch deep, 4 inches

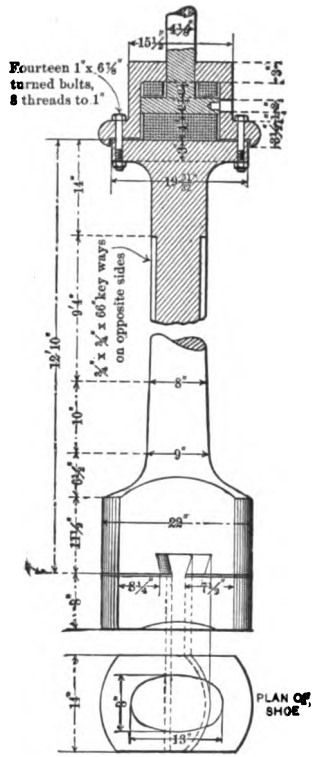

FIG. 80.—STAMP SHAFT AND SHOE OF THE ALLIS STAMP.

wide, 11⅞ inches high, which give the effect of the counter-bore of the Ball stamp, and stop the machine if the rock in the mortar gets too low. The piston is 10 inches thick. The Fraser & Chalmers uses a steam cushion in the lower end of the cylinder.

§ 114. THE STAMP SHAFT, PULLEY AND GUIDES.—The shaft of the Allis stamp is shown in Fig. 80. In all designs of stamps the shaft is about 8 inches in diameter, serving to give weight to the blow. In every instance it has a dash pot or bonnet connection with the piston rod above, and is widened to a foot or hub below, which is of the same cross-section as the shoe. On the under surface of the foot is a dovetail mortise curved on one side, into which the tenon of the shoe is keyed. The shaft has two keyways in which slide the feathers of the rotating pulley. In the Allis stamp these are ¾×¾×66 inches. Table 72 gives details of stamp shafts and their life. The wear is chiefly at the foot. In Mill 48, the foot wears away on the shoulder from 13 inches high at the start to 6 inches at the end of its life. The shaft itself also becomes worn down somewhat in diameter. It goes by cracking either in the stem or in the foot. The later designs have the shafts made larger near the foot and the foot made higher.

On the shaft, between the stamp shaft guides, there is a little loose flanged pulley through the bore of which the stamp shaft moves up and down. There are, however, two grooves in the stamp shaft and two feathers fixed to the pulley, which force the stamp to turn with the pulley. A belt driven slowly by the mill engine turns the pulley once in four blows of the stamp, or less often as shown in Table 70. This pulley is sometimes omitted from the Fraser & Chalmer's stamp, which revolves therefore only accidentally.

TABLE 72.—DETAILS OF STAMP SHAFT.

Abbreviations.—Ft.=feet; In.=inches; Lbs.=pounds; No.=number.

Mill No.	Design of Stamp.	Weight.	Material.	Life.	Diameter.	Length.	Diameter of Flange.
		Lbs.		Years.	In.	Ft. In.	In.
42	Fraser & Chalmers, Union Iron Works, Ball	.....	.....	.....	(a) 8	.....	.....
43	Fraser & Chalmers	.....	Steel.	4	5	.....	.....
44	Leavitt	(a) 2,600	Krupp crucible steel.	.....	(a) 8	13 1	20
45	Ball	3,200	.....	.....	.....	.....	.....
46	Ball, Cuyahoga, Allis	3,600	Steel.	2	8	.....	.....
47	Allis	.....	.....	(b)	8	12 10	19¾
48	Allis	3,500	Steel.	2	8	12 10	19¾

(a) This shaft has a 4-inch hole bored through its center. (b) Two shafts out of five have broken in five years, both from flaws.

The guides (see Figs. 65-68) are simply babbitted boxes in which the stamp shaft makes its journey up and down. They are supported on heavy cross-bars on the main frame.

§ 115. FLOORS, BINS, AND FEEDING ARRANGEMENTS.—There are usually four floors for operating these stamps (see Fig. 65). The upper gives means

to tend the cylinder and valve mechanism. The second is for the dash pot or bonnet. The third is the feeding floor for water and rock, and also for the guides and rotary pulley. The fourth is to tend the screens and conveying launders.

To the rear of the stamp is placed a bin, which at Lake Superior holds rock sufficient for over 14 hours' feeding. It is supplied from a track above it and the bottom slopes three ways toward the discharge gate.

A chute is provided to convey the rock from the gate to the stamp. This chute slopes at an angle such that the rock will either just slide or just not slide. Mill 48 wets the rock in this chute to make it run easier. The head feeder (man who feeds the stamp) therefore simply allows the rock to move when the stamp needs it, or pushes it forward with but little exertion. The chute also gives opportunity to pick out high-grade rock for smelting direct, and chips of wood, rope ends and such fiber-making materials as interfere with the washing, and thus to prevent them from getting into the stamp screens and classifier spigots.

An indicator bell is struck by the flange of the stamp shaft when the rock gets to its low limit and it is time to feed more. This indicator is kept at the same height throughout the life of a shoe and die.

§ 116. Discharge.—The flow of the sand and water through the screens is increased by the swash and splash of the stamp. Steam stamps give a greater splash than the gravity stamps, not only because they are wider, heavier, and swifter, but they are lifted above the level of the water at every stroke. A stone dropping *in* water stirs the mud when it reaches the bottom. A stone dropping *into* water makes a great splash and wave on the surface in addition to stirring the mud below.

The height of discharge, so important in the gravity stamp mill, is also of interest here. In Mill 44, the edge of the mortar is 13½ inches above the new die, and if the edge of the screen frame is 2½ inches wide then the height of discharge is 16 inches above the new die. If the die wears down from 8 inches high to 4 inches high, this will make the height of discharge 20 inches above the worn-out die. Again, if 6 inches of rock are always kept on the surface of the new die, then the height of discharge above this surface will be 10 inches, and this level will remain the same with the old die when 10 inches of rock will be upon its surface.

The area of discharge is shown in Table 64. In Mill 44, with four screens and four panels (8½×44 inches) in each screen, the total screen area is 5,984 square inches. This has $\frac{3}{16}$-inch holes, ⅜ inch center to center, laid out in rows at right angles, making 19.63% holes, or 1,175 square inches of opening. If the screen holes were laid out in rows at 60° (see § 147), they would have 22.67% or 1,357 square inches of opening. If two of these screens were blanked, causing the stamp to discharge on two sides only, then the gross screen area would be 2,992 square inches, and the square inches of opening would be 587. This last area of opening is about the running average of most of the stamps. Coggin proved that, under precisely the same conditions in other respects, discharging on four sides added 7% increase of capacity over discharging on two sides.

§ 117. Water Used.—The amounts of water used are given in Table 70. An increase of the quantity of water will increase to some extent the capacity of stamps, by removing at an earlier moment the grains ready to depart from the mortar. The increase, however, is liable to give great embarrassment in the mill below, where the washing machinery will be called upon to handle the resulting increased quantity of water. The argument for much water, provided the washing machinery could handle it satisfactorily, would be exactly opposite in the case of the brittle sulphides of copper from what it would be with the native copper rock, for in the former a particle of soft sulphide, left to receive another blow, may be made wholly into slimes, while with native copper the thin leaves,

flakes, and arborescent forms need a little more stamping to break them up to a state in which gravity will act properly, even at the expense of some sliming.

It will be interesting to compare the amount of water used in these stamps with that in the gravity stamps. The average quantity of water used for gravity stamps in 21 mills in Table 135 is 6.68 tons water to one ton of ore. The water quantity used by the steam stamps, for the crushing only, is a little less in the case of two mills and about four times as great in the case of a third.

§ 118. CAPACITY OF STEAM STAMPS.—The figures on this as obtained from the mills are given in Table 70. The capacity is greater in those mills which crush soft amygdaloid rock than in those which crush hard conglomerate. The capacities for all the mills except 38, 42 and 43 are under the condition of crushing through a $\frac{3}{16}$-inch (4.76 mm.) round hole..

Experiments made on hard conglomerate rock of Mill 48 gave results shown in Table 73. In the first two of the tests the pulp that issued from the mortar

TABLE 73.—CAPACITIES OF STEAM STAMP ON ORE OF MILL 48.

Size of Screen in Mortar	Size of Trommel Hole.	Capacity of Stamp per 24 Hours. (a)	Copper in Tailings of Mill.
Inches.	Inches.	Tons.	%
$\frac{3}{16}$ round.	None.	341	0.634
$\frac{1}{8}$ "	None.	375	0.666
$\frac{1}{16}$ "	$\frac{1}{4}$	346	0.616
$\frac{1}{8}$ "	$\frac{1}{4}$	396	0.617
$\frac{1}{16}$ "	$\frac{1}{4}$	384	0.613
$\frac{1}{8}$ "	$\frac{1}{2}$	427	0.625
$\frac{1}{16}$ "	$\frac{1}{4}$	439	0.538
$\frac{1}{4}$ x $\frac{5}{8}$ slot.	$\frac{1}{4}$	421	0.539
$\frac{1}{16}$ x $\frac{5}{8}$ slot.	$\frac{1}{4}$	402	(b) 0.55

(a) This does not include the returned oversize of the trommel. (b) In this test there was a great deal of choking in the jigs by long pieces of rock.

passed directly to hydraulic classifiers and thence to jigs as in the usual scheme of Lake Superior mills. In the rest of the tests, however, the pulp from the mortar passed first to a little hydraulic classifier with one spigot. This took

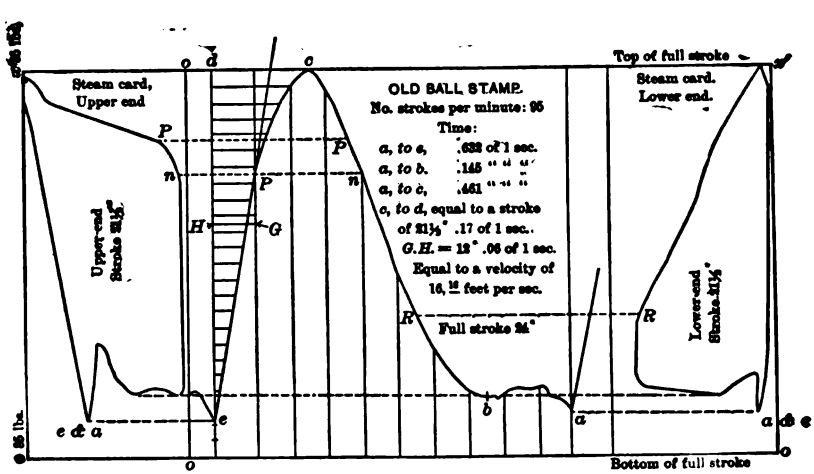

FIG. 81.—INDICATOR CARDS AND VELOCITY CARD OF OLD BALL STAMP.

out of the total pulp only a small percentage as a spigot product consisting of rich copper concentrates. The remainder went over as overflow to a trommel

with ¼-inch holes. The oversize of this trommel, amounting to about 20% in the case where a $\frac{9}{16}$-inch screen is used in the mortar, was returned to the mortar by an elevator. The undersize of the trommel passed to the classifiers and jigs as in the old scheme. The table shows not only an increased capacity by the new scheme but also a decrease in the copper lost in the tailings of the mill. On soft amygdaloid rock of Mill 46, using a $\frac{9}{16}$-inch round hole screen in the mortar and a ¼-inch trommel, the capacity was 487 tons in 24 hours and the

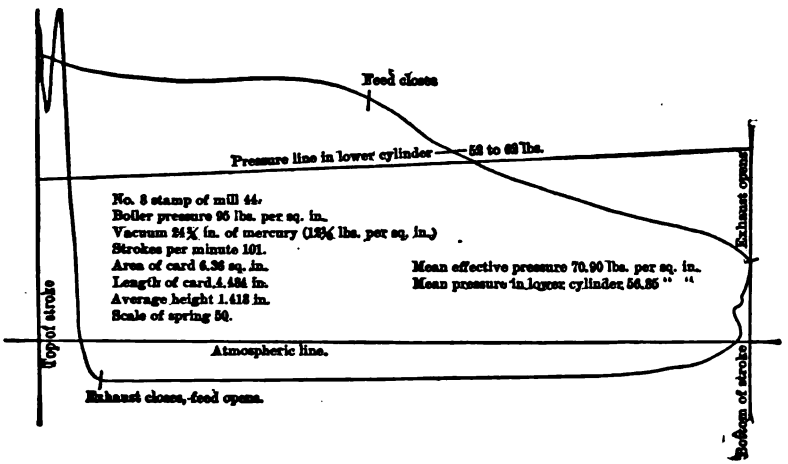

FIG. 82.—INDICATOR CARD OF LEAVITT STAMP.

percentage of copper in the mill tailings was 0.196. The mortar used was round, that is, cylindrical, having a curved screen.*

§ 119. POWER AND EFFICIENCY.—From the indicator cards given in Figs. 81, 82, 84, 85, 86 and 87, and the data given in Table 70 the horse powers have

TABLE 74.—POWER FOR STEAM STAMPS.

Mill or Authority.	Kind of Stamp.	Indicated Horse Power.		
		Up Stroke.	Down Stroke.	Total.
Coggin.[10]	Old Ball.....	34	47	81
46	New Ball.....	35	63	98
44	Leavitt.....	46	(a) 103	149
48	Allis.....	62	109	171

(a) The total of the upper end, calculated from the card in Fig. 82, is 149 horse power, but of this, 46 horse power is used in compressing steam in the lower cylinder and receiver and is used later for lifting the piston on the up stroke.

been computed and are given in Table 74. Fraser & Chalmers estimate 3 horse power for moving the valves and rotating the stem. The Allis balanced valve would probably use much less than the slide valves. It should be noted here that the indicated horse power does not take account of clearance, which increases the steam consumption and which is largest in the Ball stamp and least in the Leavitt.

Tables 75 and 76 show the relative efficiency of the various types of steam stamps with respect to the weight acting per square inch of shoe area, the tons crushed per horse power per 24 hours, the velocity at the time of striking the

* Since writing the above the new system has been introduced into the new Osceola mill and into the new Arcadian mill.

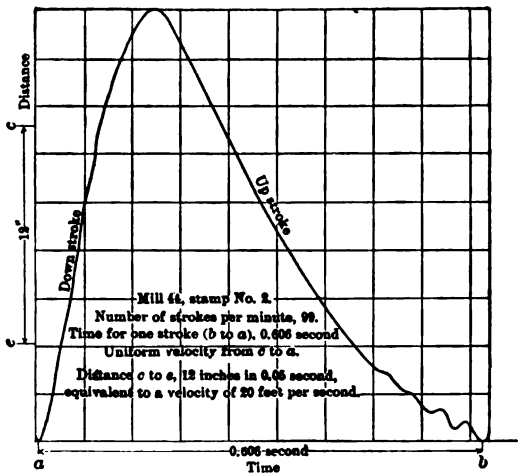

FIG. 83.—VELOCITY CARD OF THE LEAVITT STAMP.

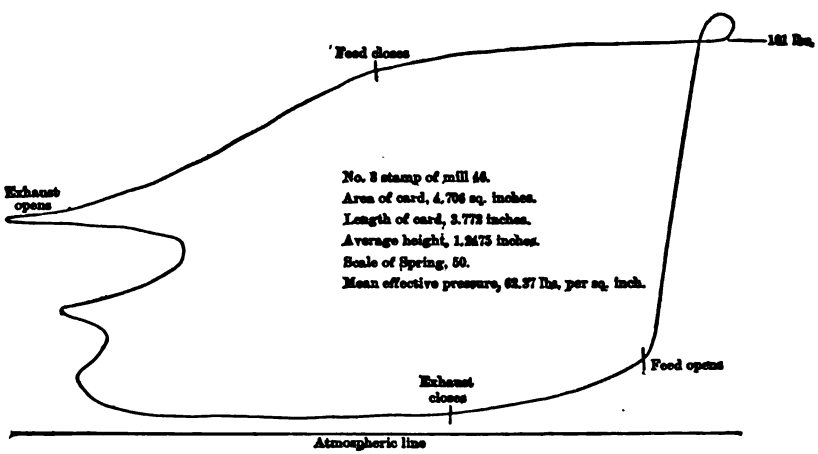

FIG. 84.—INDICATOR CARD OF THE NEW BALL STAMP, UPPER END.

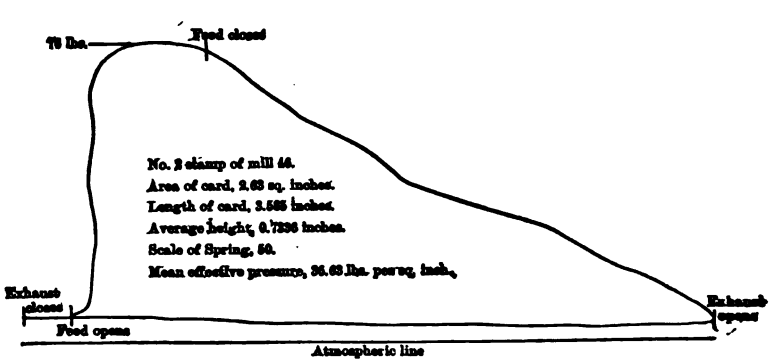

FIG. 85.—INDICATOR CARD OF THE NEW BALL STAMP, LOWER END.

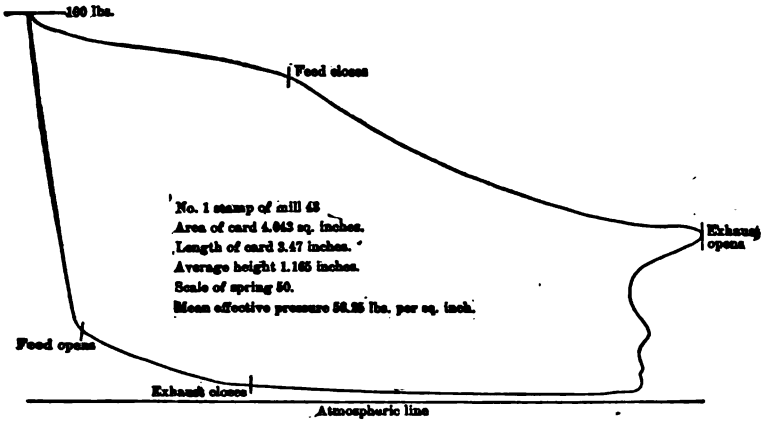

FIG. 86.—INDICATOR CARD OF THE ALLIS STAMP, UPPER END.

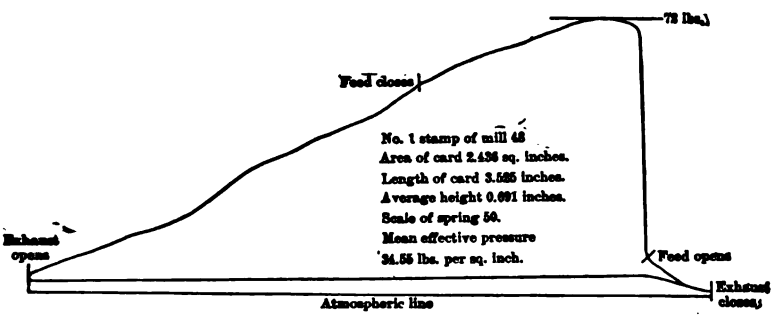

FIG. 87.—INDICATOR CARD OF THE ALLIS STAMP, LOWER END.

TABLE 75.—EFFICIENCY OF STEAM STAMPS.

Mill or Authority.	Design of Stamp.	Complete Striking Weight.	Area of Shoe.	Weight of Stamp per Square Inch of Shoe Area.	Capacity per 24 Hours per Horse Power.
		Pounds.	Square Inches.	Pounds.	Tons.
43	Fraser & Chalmers	2,500	.....	.....	.....
44	Leavitt	5,300	285.63	18.55	1.745
45	Ball	5,000	.....	.....	.....
46	Ball	5,235	285.63	18.33	1.786
46	Cuyahoga.....	5,410	285.63	18.97	.....
46	Allis.....	5,570	285.63	19.50	1.754
46	Allis.....	5,570	285.63	19.50	.....
Coggin.[10]	Old Ball.....	4,500	.....	.....	1.653

TABLE 76.—EFFICIENCY OF STEAM STAMPS.

Abbreviations.—Ft.=feet; Lbs.=pounds; Sec.=seconds; Sq.=square.

Mill or Authority.	Design of Stamp.	Velocity when Striking Blow.	Virtual Height of Fall.	Weight of Stamp.	Energy of Blow. (a)	Energy of Blow per Sq. Inch of Shoe Area.	Momentum per Square Inch of Shoe Area. (b)	Efficiency of Stamp. (c)
		Ft. per Sec.	Feet.	Lbs.	Foot Lbs.	Foot Lbs.		%
47	Leavitt.....	20	6.21	5,300	32,913	115.23	371.05	69.61
Coggin.	Old Ball....	16	3.98	4,500	17,910	.....	.....	63.74

(a) Obtained by multiplying the weight by the virtual height of fall. (b) Obtained by multiplying the weight by the velocity of striking the blow. (c) Calculated by dividing the energy of the blow in foot pounds by the indicated foot pounds of up and down stroke.

blow, the virtual height of free fall which would be necessary in order for the stamp to acquire this velocity, etc. The column of efficiency in Table 76 in one way does not do the Ball stamp justice, because the modern Ball uses higher steam pressure, and would therefore have higher velocity and possibly higher efficiency. But on the other hand, when we consider that the Ball stamp has very high clearance and the Leavitt very low, if this was included in the computation the disparity would be much greater. Coggin[10] in 1886 stated that the saving in fuel of the Leavitt over the old Ball was 10% and the gain in capacity was 25%.

TABLE 77.—EFFICIENCY OF STEAM AND GRAVITY STAMPS COMPARED.

	Weight of Stamp per Square Inch of Shoe Area.	Velocity when Striking Blow.	Height, or Virtual Height of Fall.	Energy of Blow.	Energy of Blow per Square Inch of Shoe Area.	Momentum per Square Inch of Shoe Area.	Capacity per 24 Hours per Horse Power.
	Lbs.	Ft. per Sec.	Inches.	Foot Lbs.	Foot Lbs.		Tons.
California stamps (a).....	15.38	6.06	6.85	489	8.42	91.60	1.79
Colorado stamps (b).....	13.95	8.97	15.0	937	17.27	124.32	(c) 1.4
Leavitt steam stamp.....	18.55	20.0	74.5	32,913	115.2	371.05	1.745

(a) Average of 24 mills from Table 133. (b) Average of two mills from Table 133. (c) Only one mill gave capacity.

In Table 77 are given comparative figures of California gravity stamps, Colorado gravity stamps and the Leavitt steam stamp, which is the only one on which the author has complete figures. The table shows close agreement between the gravity and steam stamps in weight per square inch in pounds, and also in tons crushed per 24 hours per horse power, but the other columns show the great power of the steam stamp blow. The great difference in the sizes of material treated by the two machines should be borne in mind in comparing tons crushed per horse power. The California stamps are crushing to about $\frac{1}{36}$ inch (0.7 mm.) while the steam stamps are crushing to $\frac{3}{16}$ inch (4.76 mm.)

§ 120. Cost of Crushing by Steam Stamps.—An approximate idea of cost may be obtained from studying Table 78. As the cost will vary more or less according to the conditions, it is clear that too much reliance should not be placed on these figures. Two columns are given, one for soft amygdaloid rock, and one for hard conglomerate rock.

Douglas[14] gives for the Atlantic mill in 1892, the cost of 25.09 cents for stamping and washing a ton of rock.

Goodale[16] states that the cost of crushing by steam stamps is much less than with breakers and rolls when trommels and elevators are taken into account.

§ 121. Clean Up.—In the mills stamping native copper it is customary to clean out the mortar as soon as small masses of copper have collected enough to cause sliming and loss of copper. The small mass copper which has been hand picked from the feed chute and has rock adhering to it, is fed into the mortar just before cleaning, to sever the rock from it. The stamp is then stopped and held at the top of its stroke while the screen is removed and the accumulation called cōver work is taken out. The periods at which cleaning up occurs are as follows: Mill 44, 12 hours; Mill 45, periodically; Mill 46, 8 hours; Mill 47, 6 to 12 hours; Mill 48, 3 days (when shoe is changed).

§ 122. Uses for which Steam Stamps are Adapted, and Quality of their Work.—These machines are the most powerful crushers known. For rock carrying native copper they seem indispensable, even though they slime a great deal of copper. For crushing brittle ores preparatory to jigging, engineers

are generally of the opinion that they slime the ore too much. The stamps are used, however, on brittle ores in three mills, (38, 42 and 43); of these, Mill 43 has just been rebuilt to use rolls for crushing, Mill 38 seldom uses the stamp,

TABLE 78.—ESTIMATED COST OF CRUSHING BY STEAM STAMPS.

	Average Cost per Ton Crushed.	
	On Amygdaloid Rock.	On Conglomerate Rock.
	Cents.	Cents.
Labor (a)	1.600	1.846
Power (b)	12.152	12.152
Screens (c)	0.139	0.258
Shoes (d)	0.475	2.350
Dies (d)	0.054	0.112
Rings (d)	0.041	0.098
Staves (d)	0.071	0.102
Repairs (e)	0.385	0.385
Water (f)	1.639	1.639
Total	16.556	18.872

(a) Labor is based on the Atlantic mill[14], where about 12 men, who are probably paid an average of $2 per shift, are required to run five stamps. From Table 70, five stamps will treat about 1,500 tons of amygdaloid, or about 1,300 tons of conglomerate per 24 hours. (b) Power from Kent* is assumed to cost $66.78 per horse power per year of 308 days of 24 hours each. Table 75 shows that the stamps treat an average of 1.784 tons per 24 hours per horse power. (c) For screens the unpunched steel plate is assumed to cost 4 cents per pound and punching to cost 25 cents per square foot. Screen area and life are taken from Table 64, being an average of Mills 44 and 48 for conglomerate rock, and of Mills 45, 46, 47 and the Atlantic for amygdaloid. (d) Gross wear of shoes, dies, rings and staves in pounds per ton crushed is taken from Tables 66, 67, 68 and 69, Mills 44 and 48 for conglomerate and Mills 45, 46 and 47 for amygdaloid. The cost is figured by assuming the new parts to cost 4 cents per pound and allowing nothing for the worn-out parts. (e) Repairs are estimated to amount to about $300 per year, and an average stamp is estimated to crush about 78,000 tons per year. (f) Pumping is estimated from Kent's* figures to cost $48 per horse power per year of 308 days of 24 hours each, and it is further assumed that 25 tons of water are lifted 100 feet for every ton of ore stamped.

* Kent's "Mech. Eng. Pocketbook," p. 790.

and Mill 42 settles the whole of its fine overflow slimes as smelting ore.* Table 79 shows to what extent the ore is slimed. It is interesting to compare this sizing test with that of the same ore in § 97 crushed by breakers and rolls.

TABLE 79.—SIZING TEST ON BUTTE ORE CRUSHED BY STEAM STAMPS[16].

	Weight %	Analysis for Silver. Oz. per Ton.	Analysis for Copper. %	Analysis for Gangue. %
Through 4. on 2.8 mm.	2.40	8.0	2.3	67.2
" 2.8 on 2.0 "	8.22	9.9	2.5	62.4
" 2.0 on 1.4 "	8.22	10.2	2.7	61.4
" 1.4 on 1.0 "	9.12	10.23	2.6	58.8
" 1.0 on 0.6 "	8.85	9.93	2.3	57.3
" 0.6 on 0.42 "	7.77	10.8	2.5	53.0
" 0.42 on 0.25 "	9.66	11.9	2.7	49.1
" 0.25 on 0.12 "	6.24	14.1	3.1	46.7
" 0.12 "	39.52	18.9	4.3	46.8
	100.00			

These large steam stamps have not proved successful for stamping gold ore. A seven months' trial at the Black Hills[8] and [28] showed that the stamp crushed too fast for the number of plates with which it was provided, also that the jar from the stamp loosened the amalgam on the plates; but the former difficulty could have been overcome by centrifugal pumps and banks of plates and the

* Since writing the above the steam stamps have been taken out of Mills 38 and 43, and the crushing is done by breakers and rolls. Mill 42 will probably follow suit.

latter by suitable framing. The stamp used had an 11-inch cylinder, and 22-inch stroke, made 95 strokes per minute and used 900 gallons (3.75 tons) of water per ton of ore. The steam pressure was 85 pounds per square inch and the capacity was 125 to 135 tons per 24 hours, crushing through a No. 7 needle (0.024 inch) slot screen. With a steam pressure of 110 pounds the capacity rose to 192 tons per 24 hours. The screen lasted six days. A finer screen caused the ore to bank in the battery and break the screen. On account of scouring action no inside plates could be used. The outside plates were 12 feet long, 4 feet wide, and sloped $1\frac{3}{4}$ inches per foot. The capacity per unit of fuel was the same as with the Homestake (gravity) stamp, but the latter crushed finer, which is to its advantage.

The suggestion has been made to the author to use a large steam stamp to reduce gold ore, to say $\frac{3}{16}$ inch in size, and Huntington mill, or some similar mill, to take the coarser portion and bring that down to gold mill sizes. This would make a much more compact plant than the usual gravity stamps.

Small Steam Stamps.

§ 123. Small Steam Stamps have been designed for gold milling and prospecting. The special advantages which they offer for this purpose are: they have light weight for transportation; they can be quickly erected without a permanent building and as quickly dismounted; on these accounts they are particularly valuable for tiding over the period of doubt in starting new enterprises. Among the designs that have been brought forward are the Tremain, the Sharpneck, the Hammond and the Wood. The first is a good representative of the class and will therefore be described.

§ 124. The Tremain Steam Stamp Mill (see Figs. 88*a* and 88*b*), is a light battery with two steam driven stamps, especially adapted for proving up properties, but which may also prove suitable for permanent milling. The information obtained is mainly derived from Gates Iron Works Catalogue, No. 8. Sperry[15] gives results derived from a year's work with one of these mills.

The mill has two stamps in one mortar, each weighing 300 pounds. The stamp drops from 5 to 8 inches. The mortar has a base $23\frac{1}{2}\times21\frac{1}{2}$ inches. The inside dimension at the discharge lip is 12×20 inches, the outside at the lip is 14×24 inches. On the top are four sockets, into which four iron rods are keyed; upon the upper ends of these rods, long screw threads are cut and the two steam cylinders in one casting are held in place by lock nuts above and below, thus giving an easy vertical adjustment of the same. The casting comprising the two cylinders is hung on two trunnions, giving it perfect freedom to line itself with the stamp guides below. Lower down, on the two rear rods, the wooden stamp guides and the automatic feeder (not shown), are attached. For the latter either a Hendy, a Tullock or a special Gates feeder may be used.

The shoe and die are $7\frac{1}{2}$ inches diameter. The new shoe weighs 112 pounds and is 9 inches high. The new die weighs 62 pounds and is 5 inches high, with discharge lip 2 inches above it. This Mr. Sperry raised to 6 inches by a 4-inch chuck block. The area of the screens, which are placed at the ends and front of the mortar, is 540 square inches outside the frames. The net sizes of screens inside the frames are: One front screen, $12\times19\frac{1}{2}$ inches, 234 square inches; two side screens, each 12×8 inches, 192 square inches; total, 426 square inches. The raising of the height of discharge reduced this to 256 square inches, but did not materially affect the speed of crushing. The screen slopes 11°. Sperry used a 20-mesh iron wire screen which lasted 150 to 250 hours, or for 75 to 125 tons, when it would break along the lower member of the screen frame. The frame can then be inverted and used until the other edge breaks. The shoe

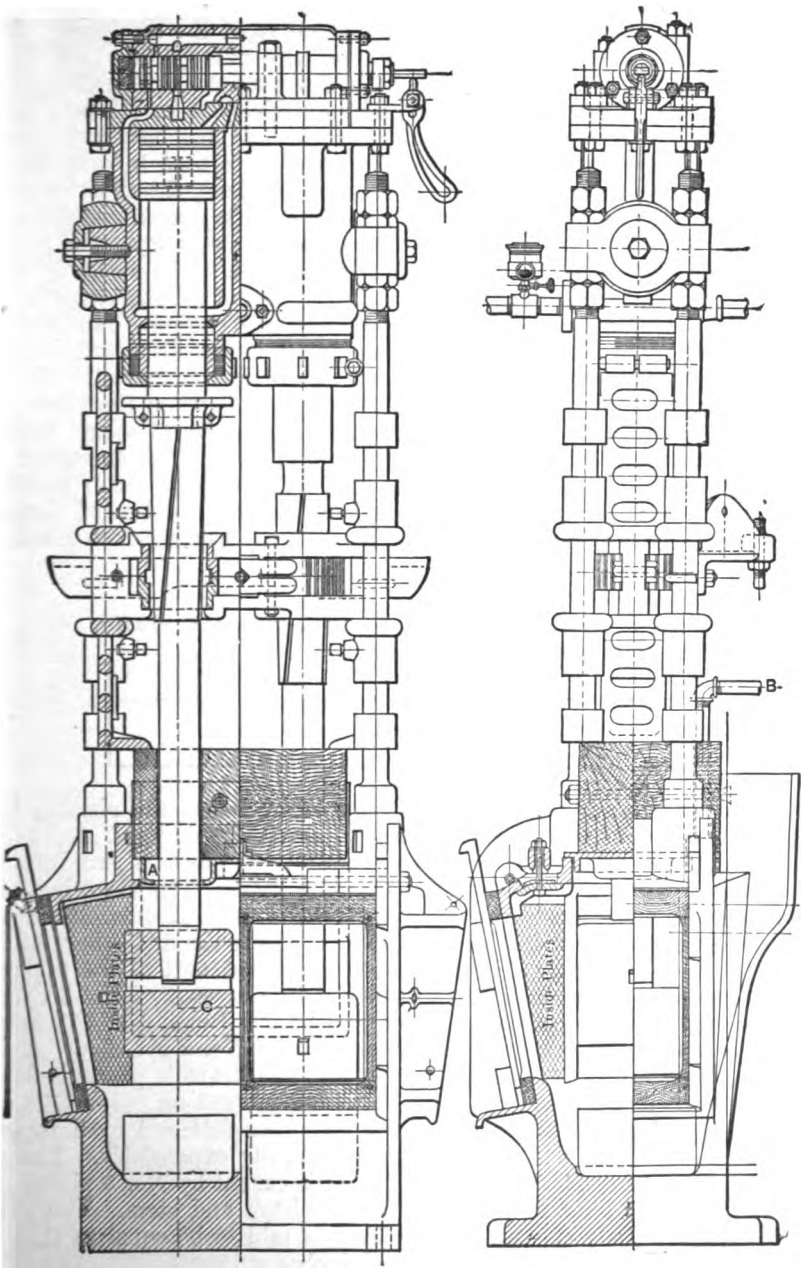

FIG. 88*a*.—FRONT ELEVATION OF TREMAIN STAMP.

FIG. 88*b*.—SIDE ELEVATION OF TREMAIN STAMP.

does the duty of the boss and shoe together of the California gravity stamp. The rough cast conical socket in the upper end is fitted to the turned conical end of the stem by brass shims.

A collar bolted to a recess in the stem serves to actuate the feeder. This collar is made cup-shaped to keep the cylinder oil from the amalgam. A careful engineer who feeds the required amount of oil—namely, one drop in three to five minutes—will have no trouble with the amalgamated plates. Cotton waste, soap chips and pearline, to catch and emulsify cylinder oil, may be used.

The stamp shaft revolves accidentally either way. It has, however, three slots or key seats with wooden keys to run in the same, to be used in case the stamp persists in dropping in one position. When this happens, the shaft is revolved to the opposite position and held there by the wooden key until the difficulty is overcome. Shoes and dies wear equal amounts and very evenly. Sperry found the wear to be about ½ inch or 10 pounds per 100 tons. The available wearing length of the shoe is 4½ inches, that is, up to the bottom of the socket for the stem.

The stamp is self-contained, bolted together in one compact part and has a total height of 7 feet 6 inches. The piston is 5½ inches diameter, with three sets of piston rings to make it tight; the rod is 4 inches diameter; the total striking weight of piston, stem and shoe is 300 pounds when the shoe is new. Each stamp can, with 100 pounds per square inch pressure of steam, make 200 strokes per minute of 6 inches in height. The stroke can be increased to 6¾ inches and decreased to 5 inches, and even less if necessary. It is maintained constant in running by adjusting the cylinder. The number of drops per minute varies with the steam pressure in the boiler. For a 6-inch stroke it is as given in Table 80.

TABLE 80.—NUMBER OF DROPS OF A TREMAIN STAMP.

Boiler Pressure per Square Inch. Pounds.	Number of Drops of Each Stamp per Minute.
60	140
80	180
100	200

The two cylinders are alternately fed with steam below the pistons, having an annular area of 11.19 square inches. As the lower edge of No. 1 piston reaches a point 1.7 inches from the top of its stroke, it passes a port into which the live steam rushes and throws the main slide valve. The throwing of this valve produces simultaneously the following actions: (1) It cuts off the steam from the under part of No. 1 cylinder; (2) it connects the under part of No. 1 cylinder with the upper part; (3) it closes the exhaust port of the upper part of No. 1 cylinder; (4) it opens steam feed to the under part of No. 2 cylinder; (5) it opens the exhaust port to the upper part of No. 2 cylinder; (6) it breaks the connection between the upper and under parts of No. 2 cylinder. A differential action then takes place in No. 1 cylinder; the steam is pressing down on 23.76 square inches of surface while it is pressing upward on only 11.19 square inches. There results a cushioning of the up stroke followed by a rapid and powerful down stroke in which the steam acts wholly expansively. The throw of the valve to admit steam below No. 1 piston is caused by No. 2 piston and it takes place after the blow is struck by No. 1 piston and stem. The cycle of No. 2 piston is precisely the same. The blow is said to be equal to that of an 800 or 1,000-pound gravity stamp falling 8 inches.

The capacity of crushing through 40-mesh is given by Gates as 8 to 20 tons per 24 hours according to the rock, average 10 to 15 tons for ordinary quartz, consuming, according to speed, 7 to 10 horse power. Gates furnishes either

10 or 15 horse power boiler, but recommends the latter, to meet the extra calls it may be asked for, for example, pumping water for the mill. One cord of good pine wood runs it 24 hours and 1⅛ miner's inches, or 800 gallons of water per hour suffice. It is better to allow 1,000 gallons if it is to be had. Sperry found the capacity to be 9.6 tons on hard and 19.2 tons on soft quartz ore through 20 mesh per 24 hours; he needed 3,000 gallons, or 12½ tons water per ton ore when apron plates sloped 1½ inches per foot, owing to much iron in the ore, but reduced it to 1,000 gallons or 4 tons water per ton ore by adopting 2 inches per foot slope of apron plates.

Gates claims that 80% of the total amalgam is caught on the lip plate and inside the battery, using small plates in the corners. Sperry found the scour on these corner plates too great, even when protected by a screen, also that a plate up on the high chuck block was not satisfactory, so that very little amalgamation was accomplished inside the mortar. Gates now recommends a plate at the rear sloping 45°. Sperry found that he used 2.4 cords dry spruce and pine per 24 hours, or $\frac{2}{10}$ cord of wood per ton of ore. This indicates 12 horse power required for his stamps, but it could have beeen greatly reduced if the boiler had been covered with non-conductor.

This stamp mill can be erected in four to eight days. It is made in two forms, portable or not. The machine weighs 3,300 pounds, is complete in itself and only needs a substantial mortar block.

Sperry obtained from Gunnison (Colorado) ore stamped through 20-mesh screen:

	Weight.	Assay per Ton.		Per Cent. of Total	
		Gold.	Silver.	Gold.	Silver.
On 40 mesh.....	28.5%	$14.00	$1.12	18.07%	26.7%
Through 40 on 60 mesh.....	4.0%	13.00	.72	2.36%	2.4%
" 60 on 80 "	10.5%	14.00	1.00	6.65%	8.8%
" 80 on 100 "	8.5%	16.00	.92	6.16%	6.5%
" 100 mesh.....	48.5%	30.40	1.37	66.76%	55.6%
	100.0%			100.00%	100.0%

The ore by careful laboratory test, yielded 48 to 60%, average 50%, of its gold to amalgamation. The mill yield ranged from 40 to 55%, averaging 45%. During the last month the laboratory test yielded 52% and the mill yielded 49.8%.

Paul Hanson and M. C. Davis, of Wolf Creek, Oregon, each of whom had run a machine for a year, testify that there has been no expense for repairs, while Sperry's only expense during a year, was for a few bolts.

The machine has to be properly cared for in order to do good work. If the shoes and dies are not of the same height for both stems, it will give trouble. For these reasons it has been condemned by some who have attempted to run it in the careless, go-as-you-please fashion which frequently occurs with gravity stamps.

Pneumatic and Spring Stamps.

§ 125. These machines aim to get the heavy blow and high speed of the light steam stamps, combined with the simplicity and economy of power of fall stamps derived from driving many stamps by one engine of economical design. Power is transmitted by crank, connecting rod, cross head, air cylinder or spring to the stamp. They all seek to deliver their blows at high velocity before the crank has reached its lower dead center, and partly on this account and partly also owing to the variable height of rock upon the die, they require an elastic con-

nection between the cross head and the stamp head which strikes the blow. The design of a satisfactory elastic connection has been the chief obstacle to the introduction of these stamps; beside, they all have high costs for repairs. They are suited for medium rather than fine crushing, owing to the difficulty of using fine screens on large surfaces. Brief mention will be made of several varieties of these stamps.

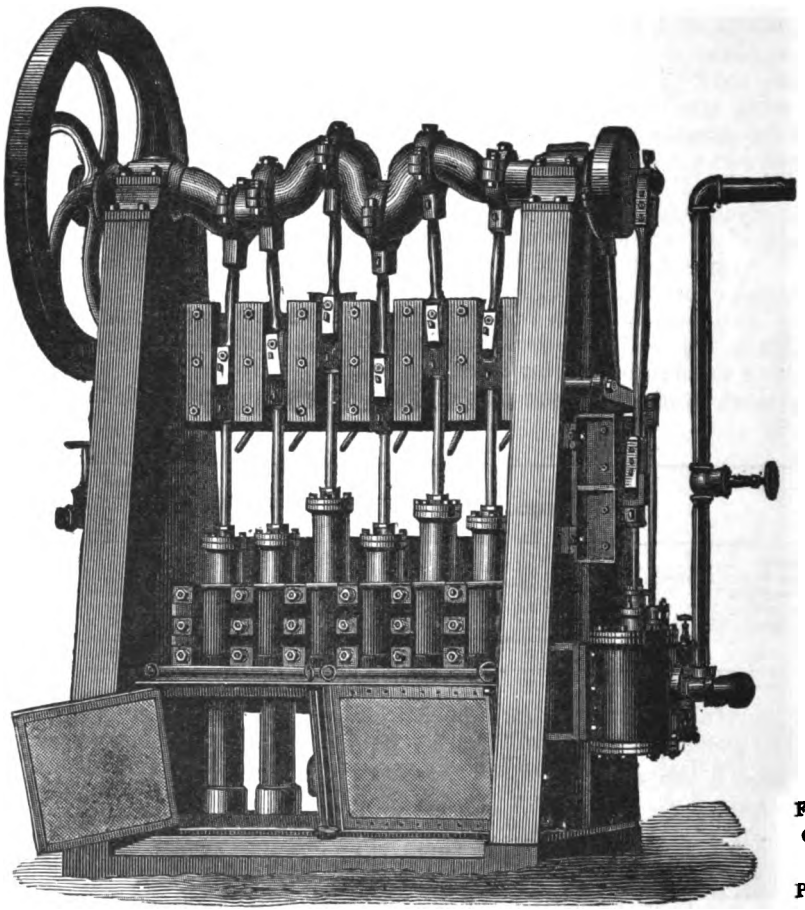

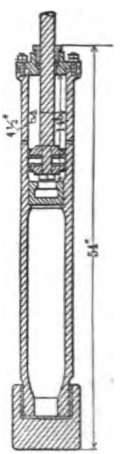

FIG. 89*b*.—CYLINDER OF THE PHŒNIX STAMP.

FIG. 89*a*.—PHŒNIX ATMOSPHERIC STAMP.

§ 126. THE PHŒNIX ATMOSPHERIC STAMP.—For many years a pneumatic stamp was used on native copper rock at the Phœnix mine of Lake Superior. Its discontinuance there was due to the shutting down of the mine. In this stamp (see Figs. 89*a* and 89*b*), the stamp heads are air cylinders with pistons, the rods of which are given a reciprocating motion in guides by a crank shaft. The motion is communicated to the stamp head by the compression of the air alternately above and below the piston. At the lower end of the cylinder or stamp head is attached the shoe which takes the wear. The mortar, dies and screens are mounted much in the same way as in a California gold stamp mill, except that six stamps are used in a mortar instead of five. The crank shaft

has six cranks which divide equally the circle. The order of drop appears from the figure to be 1, 6, 3, 5, 2, 4. Each battery has its own independent engine attached to it. The cylinders have stuffing boxes above and are stopped off air tight at 14 inches down, giving the piston, which is $4\frac{1}{2}$ inches in diameter, a cylinder 14 inches long in which to travel. The whole length of the head, with shoe attached, is 54 inches. The head runs in guides in the cover of the mortar. The cylinders each have two sets of small holes for admission and emission of air. These ensure a more elastic air cushion, increase the force of the blow and reduce the jar and noise. The stamp strikes 130 blows per minute and the six stamps reduce 40 tons of amygdaloid rock in 24 hours to pass through a $\frac{3}{16}$-inch diameter hole. The mill is said to be expensive in repairs.

Krause's Pneumatic Stamp.—This stamp was used at the Hecla tail house of the Calumet & Hecla Co. for many years to crush included grains of native copper from $\frac{3}{16}$ inch in diameter down to $\frac{1}{16}$ inch in diameter. The machine was mounted one stamp to a mortar much like a small-sized Ball steam stamp. The frame consisted of two strong posts with cross timbers to guide the stamp rod and cross head, and at the top having a shaft, a driving pulley, a fly-wheel and a crank. The power from the crank was conveyed by connecting rod and cross head to a large piston playing up and down in a pneumatic cylinder something like 12 inches diameter and 20 inches long. The condition of the lifting air cushion and striking air cushion was regulated by placing admission check valves and emission check valves as well as air cocks in suitable places in the wall of the cylinder, the idea being to strike a hard blow and at the same time to raise the cylinder as high as possible. This pneumatic cylinder was connected with the stamp rod, which was widened below and keyed to the shoe in the same manner as the Ball stamp. The capacity of this stamp was 15 to 25 tons in 24 hours, crushed to pass through a $\frac{1}{16}$-inch hole, according to the condition of the shoe and the care with which it was fed. Its best work was done with a layer $\frac{1}{2}$ inch thick on the die. This stamp was finally replaced by Heberli mills, which required less repairs and had greater capacity.

The Husband and Sholl Stamps are of this class and are much like the Krause stamp. The Husband stamp has a constant stream of water flowing through the piston to keep it cool. A battery of four Husband stamps crushed 100 tons of moderately hard Cornish tin ore in 24 hours through a No. 36 screen, using 93.6 indicated horse power. The cost of repairs for 12 months, including shoes and dies, was 9 cents per ton[53].

Morison's High Speed Stamp is a recent invention and combines the principles of a pneumatic and gravity stamp.

§ 127. Spring Stamps replace the cylinder and piston of the pneumatic stamp by some form of spring. Three designs of this class of stamps are here noted: the Ellenbecker, the Patterson Elephant ore stamp, and Dunham's spring stamp.

The Ellenbecker stamp was used many years at the Calumet & Hecla tail houses for crushing included grains, $\frac{3}{16}$-inch maximum diameter, to about $\frac{1}{16}$-inch diameter. In this, the flexible connection was made by a spring somewhat like a carriage spring consisting of many layers of rubber belt, wound in elliptical form. The difficulty met with in this machine lay in the heating of the spring, for, after it had been run a few hours, it had to be stopped to cool off. The rubber also rapidly deteriorated. For this reason it was replaced by the Krause pneumatic stamp.

BIBLIOGRAPHY FOR STEAM STAMPS.

1. Bilharz, O., (1896), "Mech. Aufbereitung," Vol. I., p. 107. Description, power and capacity of Ball stamp.
2. Egleston, T., (1887), "Metallurgy," Vol. I., p. 193. Description of Ball stamp with wear, cost, power, etc.
3. Foster, C. Le N., (1894), "Ore and Stone Mining," p. 551. Short description of Ball and Leavitt stamps, giving capacities.
4. Gaetzschmann, M. F., (1864 and 1872), "Aufbereitung," Vol. I., pp. 255, 272; Vol. II., pp. 642, 645, 653. Various notes on the Ball and the Wilson steam stamps.
5. Hunt, R., (1884), "British Mining," p. 734. Description of Wilson's small steam stamp.
6. Lock, A. G., (1882), "Gold," p. 1021. Description of Fisher's rotating bed steam stamp mill.
7. Louis, H., (1894), "Gold Milling," p. 247. Steam stamps are compared with gravity stamps for gold milling.
8. Rickard, T. A., (1897), "Stamp Milling," pp. 97, 247. Results of trial of steam stamp for gold ores in Black Hills. Its disadvantages for this work.
9. Rose, T. K., (1894), "Gold," p. 145. Short description and discussion of applicability and advantages of large steam stamps.

---

10. *Am. Soc. Mech. Eng.*, Vol. VI., (1885), p. 370. F. G. Coggin. Discussion of construction and economy of Ball and Leavitt stamps.
11. *Am. Inst. Min. Eng.*, Vol. II., (1874), p. 208. J. F. Blandy. Capacity and cost of Ball stamp.
12. *Ibid.*, Vol. V., (1877), p. 587. C. M. Rolker. Details of construction and wear of Ball stamp.
13. *Ibid.*, Vol. VI., (1877), p. 305. T. Egleston. Cost of stamping and washing at the Allouez mine.
14. *Ibid.*, Vol. XXII., (1893), p. 323. J. Douglas, Jr. Cost and labor used at Atlantic mill for Ball stamps.
15. *Ibid.*, Vol. XXVI., (1896), p. 545. E. W. Sperry. Description of and results obtained by a Tremain stamp.
16. *Ibid.*, p. 607. C. W. Goodale. Comparison of steam stamps and rolls.
17. *Coll. Eng.*, Vol. XVII., (1896), p. 158. No author. Description of Tremain steam stamp.
18. *Dingler's Polyt. Jour.*, Vol. 261, (1886), p. 239. Abstract from *Am. Soc. Mech. Eng.*, Vol. VI, p 370.
19. *Engineering*, Vol. XLI., (1886), pp. 119, 130, 201. Abridgment of *Am. Soc. Mech. Eng.*, Vol. VI., p. 370.
20. *Eng. and Min. Jour.*, Vol. XVII., (1874), p. 401. Similar to *A. I. M. E.*, Vol. II., p. 208.
21. *Ibid.*, Vol. XXII., (1876), p. 359. No author. Detailed description of Ball stamp, with costs.
22. *Ibid.*, Vol. XXIII., (1877), p. 274. Similar to *A. I. M. E.*, Vol. V., p. 587.
23. *Ibid.*, Vol. XXXVII., (1884), p. 445. No author. Description of Sharpneck's small steam stamp for gold milling.
24. *Ibid.*, Vol. XXXVIII., (1884), p. 17. No author. Dimensions and capacity of the Ball and Leavitt stamps at the Calumet & Hecla mill.
25. *Ibid.*, Vol. XLI., (1886), p. 210. F. G. Coggin. Similar to *Am. Soc. Mech. Eng.*, Vol. VI., p. 370.
26. *Ibid.*, Vol. XLV., (1888), p. 70. No author. Description and drawing of the Allis stamp.
27. *Ibid.*, Vol. XLVI., (1888), p. 453. No author. Note on substitution of heavy mortar beds for spring timbers.
28. *Ibid.*, Vol. LX., (1895), p. 250. T. A. Rickard. Results obtained with a steam stamp on gold ores in the Black Hills.
29. *Inst. Civ. Eng.*, Vol. CXIV., (1893), p. 133. M. B. Jamieson and John Howell. Note on the steam stamps used at Broken Hill, New South Wales.
30. *L. Superior Min. Inst.*, Vol. II., (1894), p. 97. F. F. Sharpless. Figures comparing Ball, Leavitt and Allis stamps.
31. *Min. & Sci. Press*, Vol. LXXV., (1897), p. 483. No author. Description and capacity of Allis steam stamp.
32. *Oest. Zeit.*, Vol. XXXVI., (1888), p. 201. K. Barth. Description of Ball, Leavitt and Allis stamps.
33. *Pract. Mech. Jour.*, (1871), p. 348.

34. *Raymond's Rep.*, (1870), p. 667. W. P. Blake. Also (1872) p. 33. W. A. Skidmore. Both give description and capacity of Wilson's two stamp steam battery for gold milling.
35. *Zeit. Berg. Hütt. u. Salinenwesen*, Vol. XXVI., (1878), p. 144. E. Althans. Description and capacity of Ball stamp. Comparison with other forms of stamps.
36. *Ibid.*, Vol. XXVIII., (1880), p. 213. C. Mosler. Description of Ball stamp.

BIBLIOGRAPHY FOR SPRING AND PNEUMATIC STAMPS.

37. Davies, D. C., (1886), "Metal. Min. and Mining," p. 353. Description of Husband and Sholl pneumatic stamps and the Patterson spring stamp.
38. Foster, C. Le N., (1894), "Ore and Stone Mining," p. 551. Short description of the Husband pneumatic and the Patterson spring stamps.
39. Gaetzschmann, M. F., (1872), "Aufbereitung," Vol. II., p. 645. Description of Hughes' pneumatic stamp.
40. Hunt, R., (1894), "British Mining," p. 734. Description of Husband and Sholl pneumatic stamps and the Patterson spring stamp.
41. Kunhardt, W. B., (1893), "Ore Dressing," p. 50. Description, capacity, advantages and disadvantages of pneumatic stamps.
42. Lock, A. G., (1882), "Gold," p. 1019. Description of Dunham's spring stamp, Patterson's spring stamp and Sholl's pneumatic stamp.
43. Louis, H., (1894), "Gold Milling," p. 248. Disadvantages of spring and pneumatic stamps.
44. Rose, T. K., (1894), "Gold," pp. 144, 147. Description of the Husband pneumatic stamp and the Patterson Elephant ore stamp (spring).

---

45. *Am. Inst. Min. Eng.*, Vol. II., (1874), p. 208. J. F. Blandy. Description of pneumatic stamp used at Phœnix mill, with its capacity both at Lake Superior and in Cornwall.
46. *Berg. u. Hütt. Zeit.*, Vol. XXXVI., (1877), p. 186. No author. Description of Sholl's pneumatic stamp.
47. *Ibid.*, Vol. XXXVIII., (1879), p. 347. No author. Short note on Patterson's spring stamp.
48. *Dingler's Polyt. Jour.*, Vol. 231, (1879), p. 318. No author. Description of Froitzheim's spring stamp.
49. *Engineering*, Vol. XXXII., (1881), p. 608. No author. Description and capacity of Dunham's spring stamp.
50. *Ibid.*, Vol. LXIII., (1897), pp. 624, 661, 791. Abstract from Morison's paper in *N. E. Coast Inst. Eng. & Shipbuilders*, Vol. XIII.
51. *Eng. & Min. Jour.*, Vol. XVII., (1874), p. 401. Same as *A. I. M. E.*, Vol. II., p. 208.
52. *Ibid*, Vol. XXXII., (1881), p. 41. No author. Description of the Elephant (spring) stamp, with figures on capacity, power and costs.
53. *Inst. Civ. Eng.*, Vol. CVIII., (1892), p. 187. A. H. Curtis. Cost and power for Husband pneumatic stamps on Cornish tin ore.
54. *Inst. Mech. Eng.*, (1873), p. 119. H. T. Ferguson. Description of the Husband pneumatic stamp and results obtained on tin ores.
55. *Min. Ass. & Inst. Cornwall*, Vol. I., Part I., (1885), p. 57. M. Loam. Description of the Husband stamp and the results obtained with it on Cornish tin ores.
56. *Ibid.*, p. 68. W. Derry. Figures on wear of the Husband stamp.
57. *Min. Jour.*, Vol. XLII., (1872), pp. 672, 806, 809. Various people furnish notes on the capacity, power, wear, cost and advantages of pneumatic stamps used in Cornwall.
58. *Min. & Sci. Press*, Vol. LXXV., (1897), p. 93. Abstract from Morison's paper in *N. E. Coast Inst. Eng. & Shipbuilders*, Vol. XIII.
59. *N. E. Coast Inst. Eng. & Shipbuilders*, Vol. XIII., (1897). D. B. Morison. Description of Morison's pneumatic stamp and comparison with gravity stamps.
60. *North Eng. Inst. Min. & Mech. Eng.*, Vol. XXX., (1880-81), p. 135. C. Parkin. Description and capacity of pneumatic stamps in Cornwall on tin ore.
61. *Rev. des Mines*, Series III., Vol. XXI., (1893), p. 287. L. Demaret. Description of Husband pneumatic stamp.
62. *Sci. American Sup.*, Vol. XLIII., (1897), p. 17902. Abstract from Morison's paper in *N. E. Coast Inst. Eng. & Shipbuilders*, Vol. XIII.
63. *Zeit. Berg. Hütt. u. Salinenwesen*, Vol. XXVI., (1878), p. 143. E. Althans. Description of the Phœnix and Sholl pneumatic stamps.
64. *Ibid.*, Vol. XXVIII., (1880), p. 210. C. Mosler. Capacity of the Phœnix pneumatic stamp.

CHAPTER V.

GRAVITY STAMPS.

§ 128. **Principle of Action.**—Gravity stamps are lifted by cams and drop

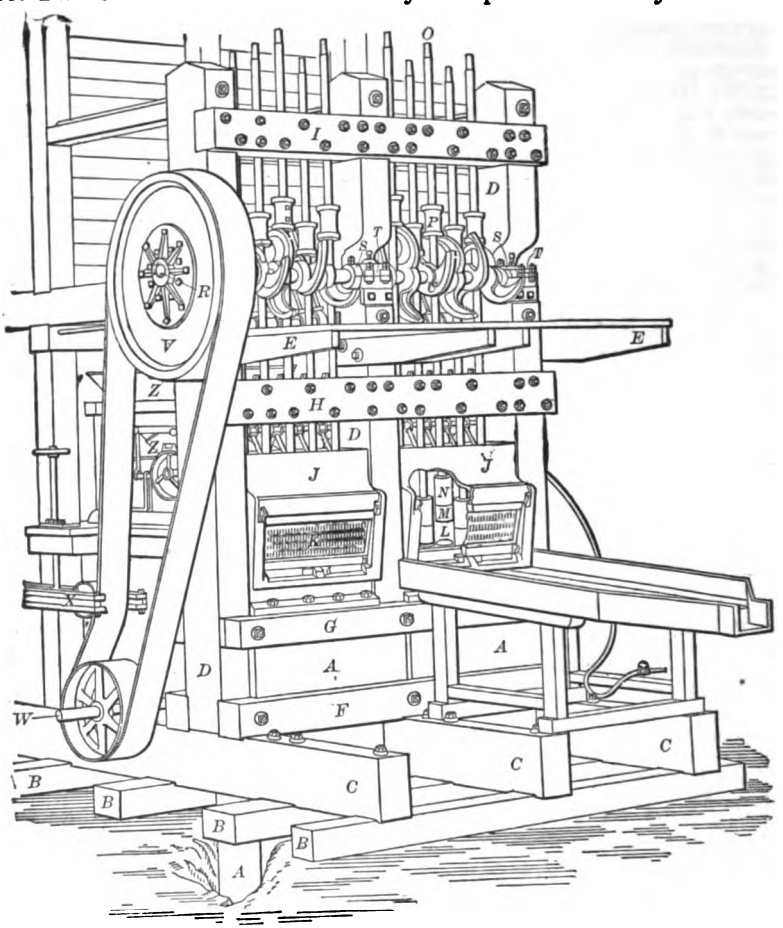

A. Mortar block.	*J.* Mortar.	*S.* Collars.
B. Mud sills.	*K.* Screen.	*T.* Cam shaft boxes.
C. Cross sills.	*L.* Die.	*U.* Cams.
D. Posts.	*M.* Shoe.	*V.* Pulley.
E. Platform.	*N.* Boss.	*W.* Main shaft.
F. G. Buckstaves.	*O.* Stem.	*X.* Tightener.
H. Lower guide timbers.	*P.* Tappet.	*Y.* Water pipes.
I. Upper guide timbers.	*R.* Cam shaft.	*Z.* Feeder.

FIG. 90.—PERSPECTIVE VIEW OF GRAVITY STAMPS.

by their own weight. The most highly developed mill of this class is called the California Stamp Mill (see Figs. 90, 91*a* and 91*b*). This stamp mill consists

of a mortar *J*, standing upon a mortar block *A*. The stamps are lifted by cams *U*, keyed to a cam shaft *R*, and drop in the mortar. A strong frame supports the cam shaft and the driving gear. A single mortar has from one to six stamps dropping in it. Five is the almost universal number in this country. One mortar with the accompanying stamps, cams, frames, etc., is called a stamp battery. This machine may be described in detail as follows:

§ 129. FOUNDATION.—The foundation of a battery is of prime importance; if it is not well made the battery cannot be run at full capacity lest it shake to pieces. A trench is generally dug in gravel or blasted in rock to receive the mortar block. This trench is usually the length of the mortar block plus two feet at each end and may be the width plus two feet at each side, more or less. This is sometimes walled in with masonry, as in Fig. 92. The bottom is generally leveled with a layer of concrete or sand or clay well tamped in. In regard to the use of concrete, Hardman says it should not be less than 30 inches thick, otherwise it may crumble and give trouble. Its use saves the more accurate leveling of the rock, which is necessary when sand is used. The use of sand is simply to level up with a thin layer the last of the irregularities of the rock. On the sand or concrete may be placed two layers of 2-inch plank spiked together. These planks also save time in construction by avoiding the necessity of smoothing the rock.

The North Star Mill (see Fig. 92) has beneath the mortar block a layer of concrete 2 feet thick and walls of ashlar masonry 3 feet thick around the sides of the trench.[45]

§ 130. THE MORTAR BLOCK (see Figs. 90 to 92 inclusive) consists of timbers or planks on end which stand upon the sand tamping, the planks or the concrete, or they may be carved out to fit the rough surface of the rock. It may be made of a length suitable for 5, 10 or 20 stamps. The first is the usual construction.

TABLE 81.—MORTAR BLOCKS.

Abbreviations.—Ft.=feet; In.=inches; No.=number.

Mill No.	Depth.		Length.		Width.		Foundation.	Material.	How Fastened.
	Ft.	In.	Ft.	In.	Ft.	In.			
55	12	0	.....		2	8	.....	2-inch plank on end. (*a*).....	.....
56	9	0	4	10	2	4	Solid rock....	2-inch planks.....	By wire spikes.
57	14	0	4	10¼	2	6	Concrete (*b*)..	30x30-inch timbers.....	See Fig. 92.
58	12	0	5	0	2	0	Solid rock....	.....	.....
59	12	9	5	0	2	6	Solid rock....	30x30-inch timbers.....	By 1-inch bolts.
60	.....		.....		.....		.....	.....	By 1-inch bolts.
61	14	0	4	10	2	6	Solid rock....	28x30-inch timbers.....	.....
62	19	0	4	8	2	2	Solid rock....	2x12-inch planks.....	By 30-penny spikes.
64	8 to 12	0 to 0	4	11	2	6	Solid rock or concrete...	Spruce, pine or sugar pine, 30x30 inches.....	By keys and six 1¼-inch bolts.
67	18	0	c 28	4	2	6	Solid rock....	Spruce 6x2 in., and 12x2 in. (*d*)..	By spikes 5 inches long.
68	9	2	4	7	2	4	.....	3 timbers	.....
71	10	0	e 13	0	2	0	Concrete.....	.....	By six 1-inch bolts.
73	.....		e 13	0	2	0	Solid rock....	Pine.....	.....
74	10	0	e 13	0	2	0	Solid rock....	.....	.....
75	9	0	4	10	2	5	Solid rock (*f*)	Pine timbers 29x29 inches.....	By three 1¼-inch bolts.
76	10	0	4	6	1	4	.....	.....	.....
77	(*g*)		.....		.....		.....	.....	.....
82	9	4	4	7	2	4	Solid rock....	3 timbers.....	.....
83	14	0	e 13	0	2	6	Solid rock....	.....	.....
84	10	0	5	0	2	0	Solid rock....	24x30-inch timbers.....	.....
87	9	0	e 10	0	2	6	Solid rock....	18x12-inch timbers.....	.....
88	12	0	4	8	2	2	Solid rock....	Planks.....	.....

(*a*) With width parallel to cam shaft. (*b*) 2 feet thick. (*c*) For four batteries (see Fig. 98). (*d*) Planed and jointed. (*e*) This is the length over all. The author is in doubt whether these are individual or combined mortar blocks. (*f*) Leveled by sand. (*g*) Horizontal stick of Oregon pine 2 feet square, laid on six transverse mud sills.

As shown by Table 81, mortar blocks vary in size from squared timbers 30×30 inches down to planks 2×12 inches on end laid together, breaking joint and held together by bolts, or timber buckstaves and bolts. Planks are better than

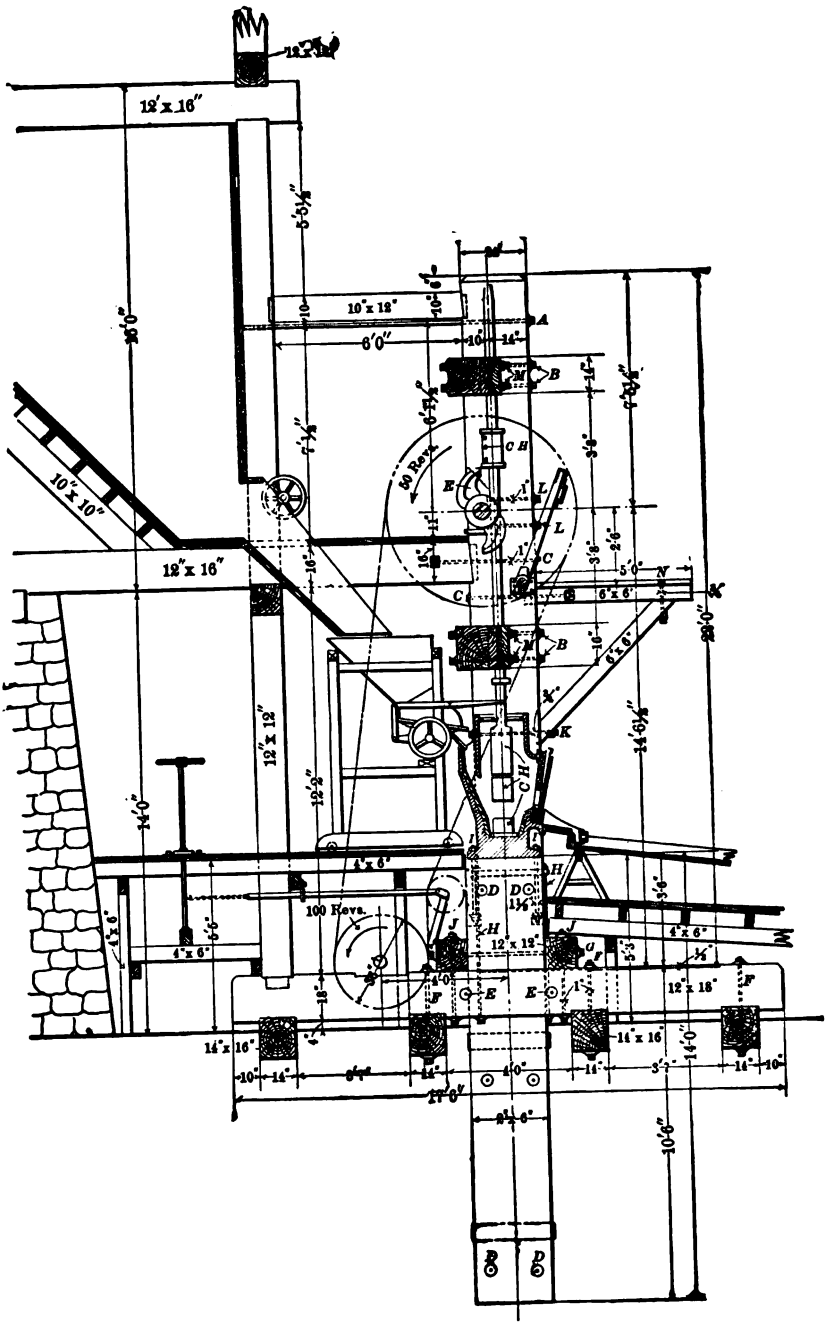

FIG. 91*a*.—SIDE ELEVATION OF STAMP MILL.

timbers, because sounder wood can be chosen, their ends are more easily carved to fit the rock and they are easier to take down. The timber which is used in the mortar blocks is exposed to hard usage as to vibrations, stresses, and decay.

It will be a proper matter for the millwright to consider whether one of the methods of preserving timber, for example, creosoting, kyanizing, Burnettizing, or tarring may not be employed to advantage. The last-mentioned is reported to have been used beneficially in a number of instances.

The top of the mortar block should be made perfectly flat to avoid a convex

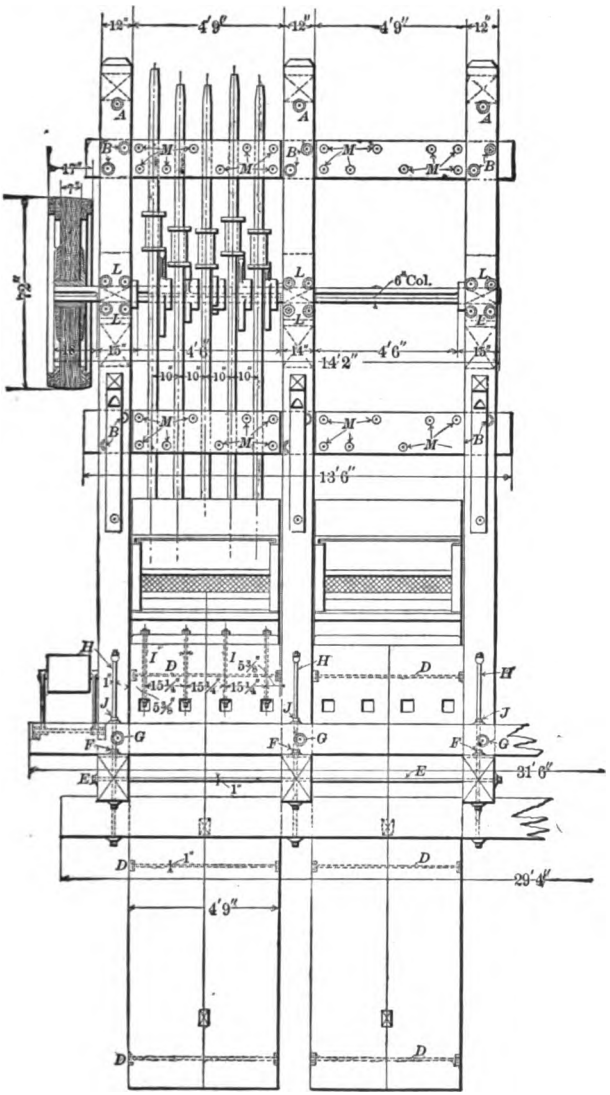

FIG. 91b.—FRONT ELEVATION OF STAMP MILL.

or concave bearing either of which might crack the mortar. It is not considered good construction to connect the mortar blocks rigidly to the frame on account of the additional jar produced.

The mortar blocks extend 1½ inches more or less beyond the sides of the mortar flanges. They are, however, of the same length as the mortar. They

are held vertical by tamping stamp sand, rock, loam or concrete all around them to fill the pit.

In a recent addition to Mill 55 the mortars each rest upon a 7-ton block of cast iron and these blocks are imbedded in a mass of concrete. A similar arrangement occurs in the new 300-stamp mill recently added to the Alaska-Treadwell plant on Douglas Island, Alaska.

Concrete mortar blocks are cheaper and more durable than those made of wood. It is claimed that they lack the resilience of timber on end, which gives greater life to the parts. On the other hand, at the Lake Superior copper mills it has been proved for steam stamps that the more solid the foundation, the greater will be the capacity, without causing increased breakage (see § 108).

The mill of the Banner mine, Oroville, Cal., has just put in a solid concrete mortar block for 20 stamps, of the dimensions shown in Fig. 94, and the first month's run with it leads to the expectation that 5 tons in 24 hours can be crushed per stamp. It is estimated that the improvement due to concrete over wood will be at least ½ ton per stamp per 24 hours. Except for an intervening rubber sheet of pure gum ¼ inch thick, the mortar rests directly on the concrete, the holding down bolts being bedded in the concrete. The stamps weigh 1,065 pounds each and drop 4 inches 110 times per minute. The height of discharge is 4 inches and the screen is 30 mesh. The diameter of the shoe is 9 inches. A single discharge mortar is used. The ore is hard quartz in thin parallel veins, with stringers of slate between.

When[7] it is necessary to found a mortar on marshy or unreliable ground a pit is dug 1 to 3 feet deep and large enough to hold the horizontal frame about to be described. The bottom is carefully leveled, and bottom timbers 12×12 inches ×18 feet are laid horizontally at right angles to the cam shaft at distances apart corresponding to the posts. For five stamps two, and for ten stamps three, bottom timbers are used. If the ground is very unreliable, the space between these bottom timbers is filled up with like timbers. If not so bad, the space immediately underneath the mortars is filled with short blocks 12×12×24 inches, parallel to the bottom timbers. Next above, six mud sills of 12×12-inch timbers are laid parallel to the cam shaft. Two are in contact with each other and lie under the mortars. Two more divide the space to the ends of the bottom timbers and the remaining two are placed at those ends. Upon the mud sills lie the cross sills, which are like the bottom timbers. All three sets are now strongly bolted together by vertical bolts and the spaces between the timbers are filled with stones, gravel or loam. The mortar block is now made by laying a horizontal timber, 20×20 inches to 30×30 inches, parallel to the cam shaft, upon the frame just described, and long enough to support the one or two mortars and the two or three posts. The mortar block is bolted to the frame and the posts are mortised into the mortar block.

In the Dahlonega district of Georgia[47], with stamps weighing only 450 pounds each, the above construction is common even in solid ground (see Figs. 95*a* and 95*b*). In Mill 77 the mortar block is a horizontal timber, 24×24 inches, of Oregon pine, lying on six cross sills 8 feet long. In this mill the mortar blocks of timbers on end gave trouble by breaking stamp stems, owing to the long, high drop of the stamps. This type of mortar block is illustrated in Fig. 96.

§ 131. Placing the Mortar.—Upon the mortar block three thicknesses of common house blankets, costing $9 per pair,[40] coated with tar on both sides, are placed, or blankets may be used without tar, or sheet rubber ¼ to ⅜ inch thick may be used. This packing gives an even bearing, reduces the jar to a minimum and prevents dirt from entering to destroy the level. Vertical bolts, 1⅝ to 1¼ inches in diameter and 3 to 4 feet long, for holding down the mortar are set into the mortar block. These may have nuts and washers, or keys and washers

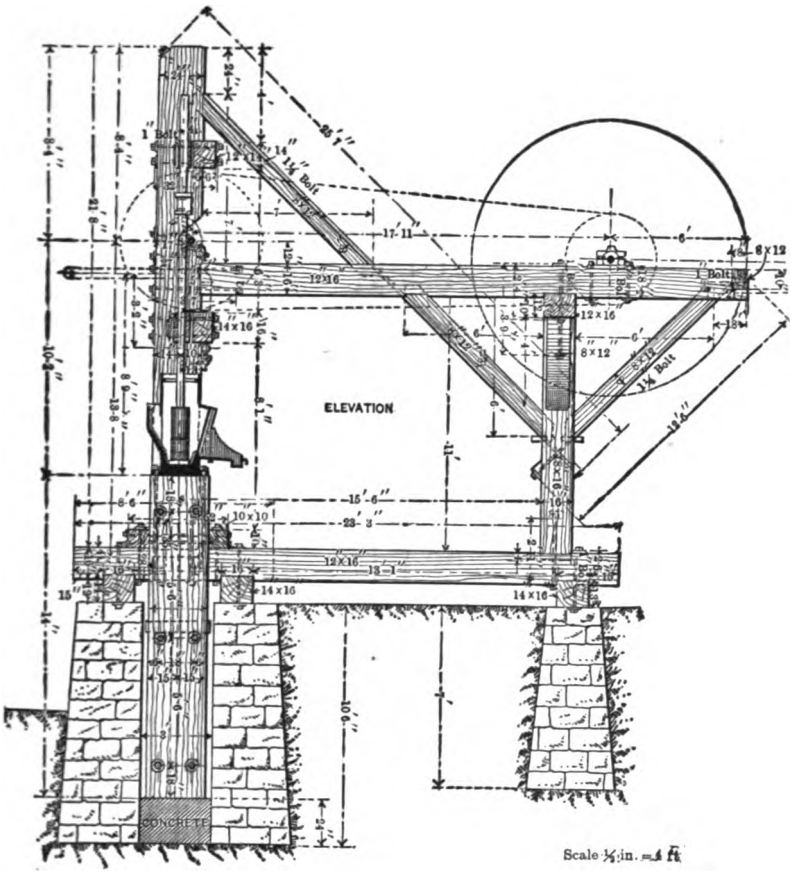

FIG. 92.—NORTH STAR STAMP MILL.

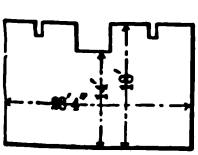

FIG. 93.

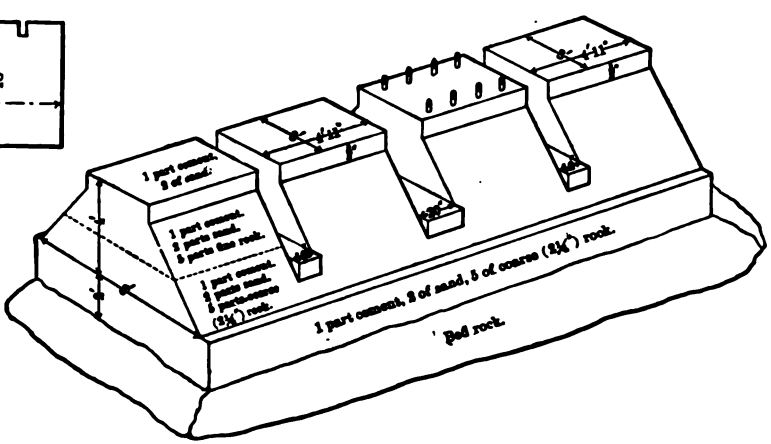

FIG. 94.—CONCRETE MORTAR BLOCK AT THE BANNER MINE.

below, for which recesses have been cut in the side of the mortar block (see Figs. 91*a* and 91*b*) or they may be eye-bolts which have been let into the sides of the mortar blocks, and which are held by horizontal 2-inch bolts passing through the eyes and through the mortar block. With the latter, the mortar is more securely and evenly tied to the block, and the block is more easily replaced.* Table 82 shows the kind and size of bolts recommended by manufacturers. In

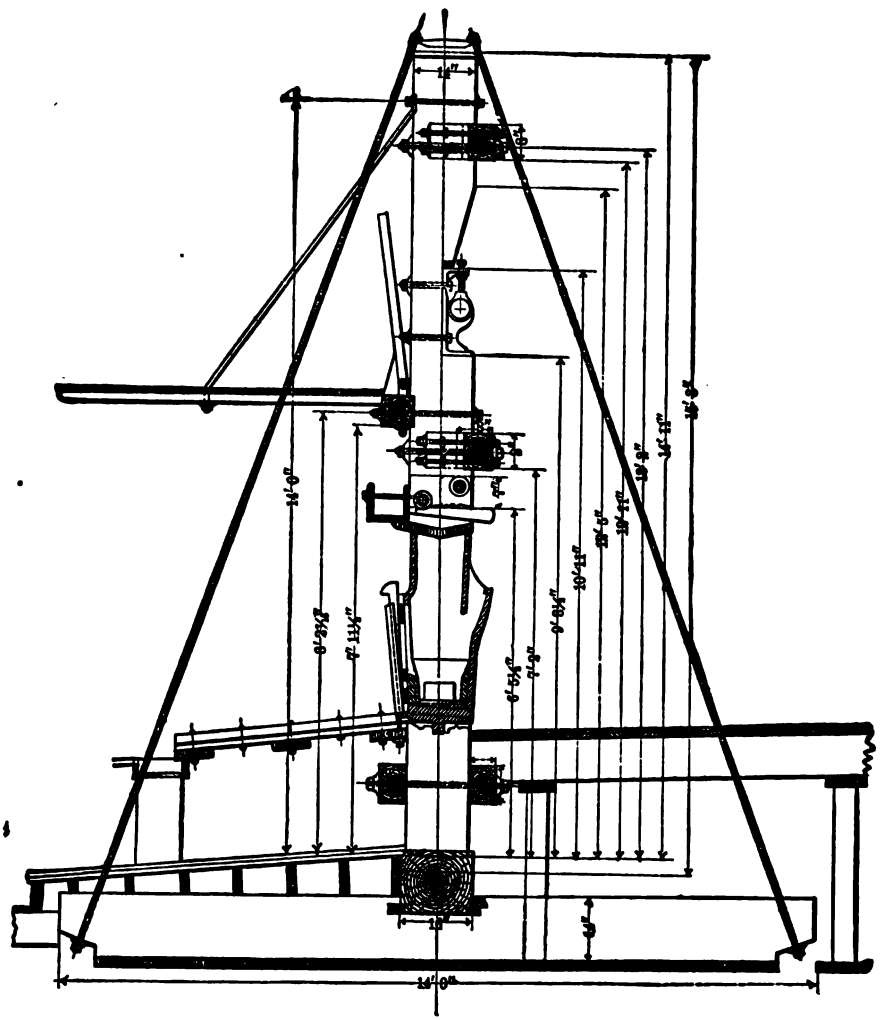

FIG. 95*a*.—SIDE ELEVATION OF THE HALL STAMP MILL USED IN THE DAHLONEGA DISTRICT, GEORGIA.

TABLE 82.—BOLTS FOR HOLDING DOWN THE MORTAR.

Manufacturer.	Kind of Bolt.	Number of Bolts per Mortar.	Diameter of Bolt. Inches.	Length of Bolt. Inches.
Fraser & Chalmers.....	Key and washer.	8	1½	32
McFarlane.....	Eye bolt.	.....	1½	38
Union Iron Works.....	Key and washer.	8	1½	30

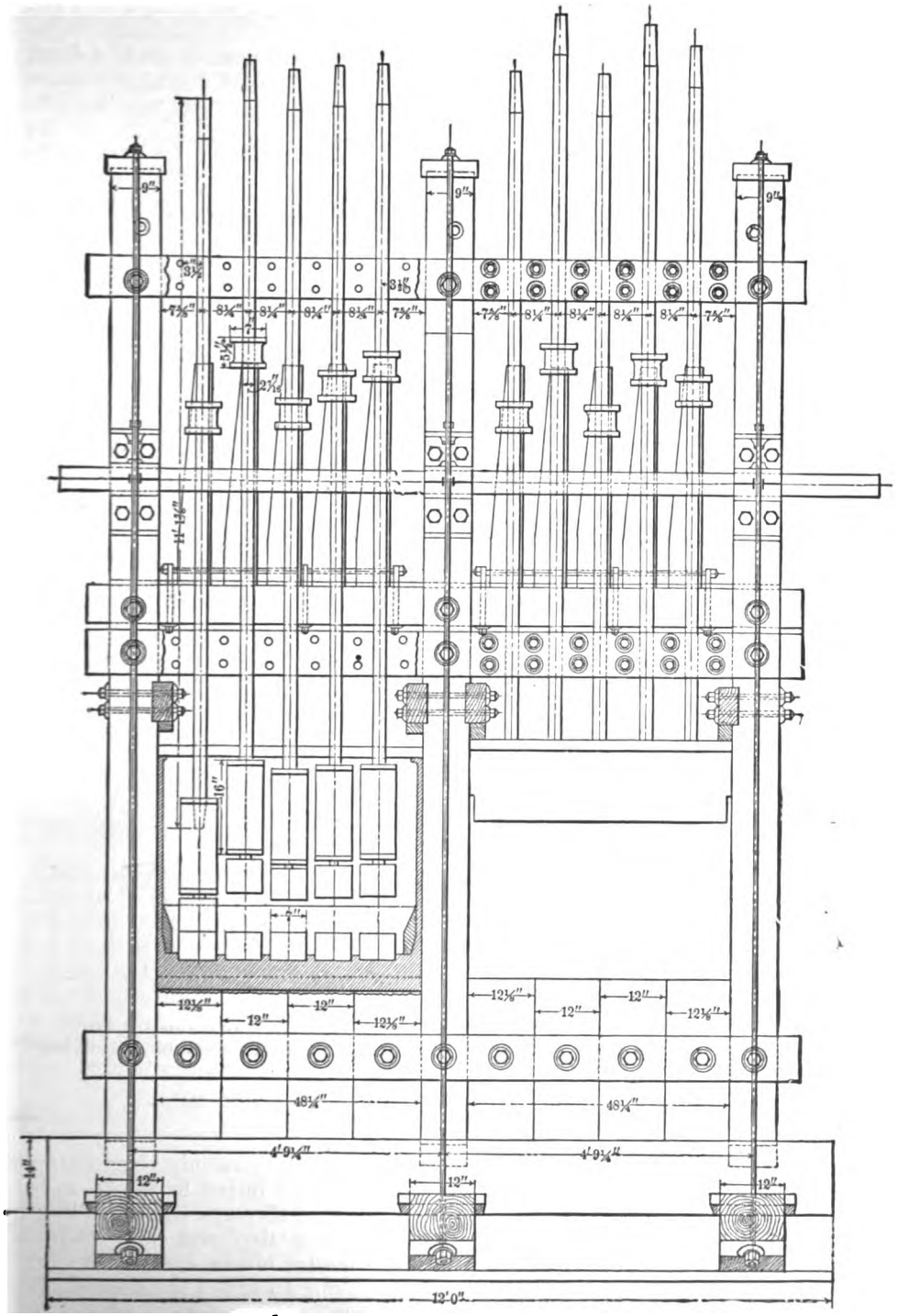

FIG. 95*b*.—FRONT ELEVATION OF THE SAME.

Mill 67, 12 threads to the inch were found to hold better than 6 threads to the inch on 1½-inch bolts.

The Dahlonega light mortars with stamps weighing 450 pounds are held down by wedges across the top of the mortars and are held against lateral movement by a rib running lengthwise, cast upon the bottom of the mortar and let into the mortar block (see Fig. 95*a*).

THE STAMP FRAMES.—These structures are made to support the cam shafts and generally the main shaft, and also to guide the stamps. They are made of wood, cast iron, steel or wrought iron. They consist of the mud sills, cross sills, posts, braces and guide timbers.

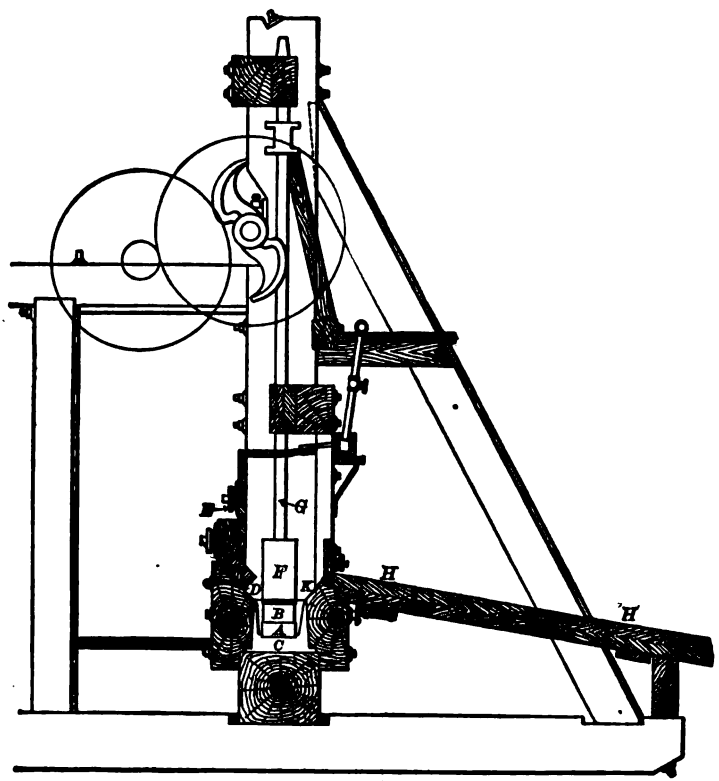

A. Die.
B. Shoe.
C. Mortar.
D. Position of rear inside plate.
F. Boss.
G. Stem.
H. Amalgamating table.
K. Position of front inside plate.

FIG. 96.—A GILPIN COUNTY (COLORADO) STAMP MILL.

§ 132. MUD SILLS.—(See Figs. 90-92).—These are commonly three or four in number; six are sometimes used. They are 12×12 inches to 24×24 inches in section, according to the weight of the stamps, and they run the whole length of the mill parallel to the cam shafts. Sometimes they rest upon and are bolted to masonry. Two of them are near the mortar blocks, one on each side. The others are distributed to suit the frame. Table 83 shows the sizes of mud sills recommended by manufacturers and authors.

TABLE 83.—MUD SILLS.

Mill, Manufacturer, or Author.	Number of Sills.	Size of Sill.	Length.	Weight of Stamps.
		Inches.	Feet. Inches.	Pounds.
Mill 57	3	14x16	.....	850
Mill 64 (a)	3	18x18	28 0 (4 batteries.)	800
Fraser & Chalmers	4	14x14	7 10 (1 battery.)	.....
McFarlane	4	12x12	.....	850
Union Iron Works	4	14x16	29 4 (4 batteries.)	1,000
Louis[19]	3	16x16 or 15x18	Length of the mill.	800
Egleston[5] (b)	3	24x18	28 0 (4 batteries.)	.....
Eissler[7]	3 or 4	24x24	.....	.....

(a) Laid in concrete. (b) Consolidated Virginia mill.

§ 133. Cross Sills (see Figs. 90-92) are 12×16 inches to 20×24 inches, according to the weight of the stamps, and 13 to 29 feet long, according to the demands of the frame. They are laid horizontally across the mud sills, to which they are notched and bolted. They are placed one under each post and consequently there should be two, or one of double size, under the center post of two adjacent batteries, where the weight is double that upon the end sills. Table 84 shows the sizes of cross sills.

TABLE 84.—CROSS SILLS.

Mill, Manufacturer or Author.	Size.	Length.	
	Inches.	Ft.	In.
Mill 57	12x16	13	1
Mill 64 (a)	14x18 and 20x24	14 24	0 0
Mill 67	12x18	29	0
Fraser & Chalmers	12x18	16	0
McFarlane	12x18	19	9
Union Iron Works	12x18	17	6
Louis[19]	15x15	.....	
Egleston[5] (b)	20x20 and 14x20	28	0
Eissler[7]	18x24	18	0

(a) This mill has twenty stamps in one frame and has five cross sills, or one under each post. The two outside ones are 14x18 inches, and 24 feet long. The middle one is 20x24 inches, and 24 feet long. The other two are 14x18 inches, and 14 feet long. They are made of spruce or sugar pine. (b) Consolidated Virginia mill.

§ 134. The Posts.—(See Figs. 90-92).—Upon the cross sills stand the posts in frames for ten or twenty stamps. The end posts are 12×24 inches in section in 11 mills, 14×24 inches in 2 mills and 11½×23 inches in 1 mill. The middle posts are 24×24 inches in 5 mills, 12×24 inches in 5 mills, 20×24 inches in 3 mills, and 23½×23½ inches in 1 mill. When four batteries are framed together, the posts next the end are the same size as the end posts. A 12×24-inch post may be made from two 12×12-inch timbers, but the surfaces must be true and they must be pin doweled and thoroughly bolted. Such posts were in good condition after six years' wear.[79] Table 85 shows dimensions of posts.

TABLE 85.—POSTS.

Mill or Manufacturer.	Height.		Distance from Top of Cross Sill to Top of Lower Guide.		Clear Space between Guides.		Distance from Top of Lower Guide to Center of Cam Shaft.	
	Ft.	In.	Ft.	In.	Ft.	In.	Ft.	In.
Mill 57. (a)	21	8	10	3	6	3	3	1
Mill 64	21	8	9	6¼	7	5	2	7
Fraser & Chalmers	22	8	11	3	6	5	3	3
McFarlane	19	4	9	2	6	8	3	4
Union Iron Works	22	0	10	10½	7	4	3	8

(a) See Figure 92.

The posts are mortised or let into the cross sills. Buckstaves are placed over the cross sills on each side of the mortar block (see Figs 91*a* and 92), and are bolted horizontally through the posts from front to rear. They may rest on

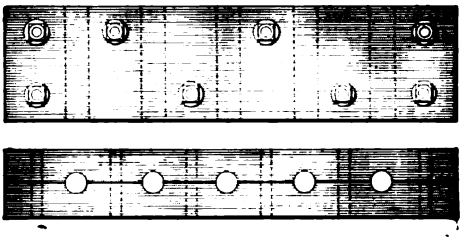

FIG. 97.—PLAIN WOODEN GUIDES.

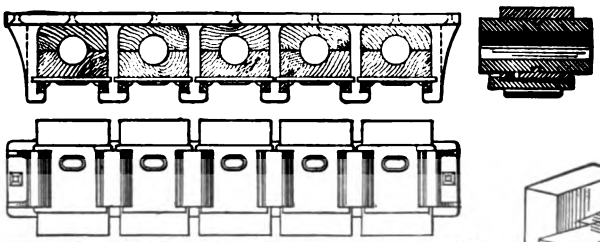

FIG. 98.—SECTIONAL GUIDES OF WOOD AND CAST IRON.

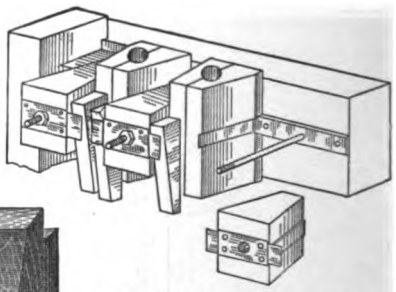

FIG. 99.—ACME GUIDE.

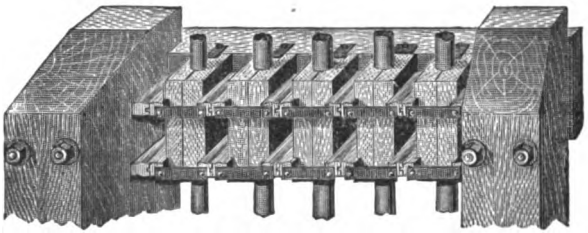

FIG. 100*a*.—FARGO GUIDES.

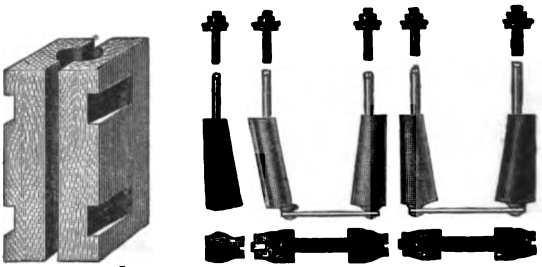

FIG. 100*b*.—DETAILS OF FARGO GUIDE.

the cross sills and be bolted vertically to them. In some cases (see Fig. 90) there are also horizontal buckstaves extending about ¼ inch above the top of the mortar block and serving to keep the rubber from squeezing out. From 12 to 16 feet above the top of the cross sill the posts are notched in, nearly to the

center, to receive the cam shaft boxes. These notches may be cut either in the front or the rear sides of the posts, according as front cams or rear cams are used.

§ 135. GUIDE TIMBERS.—The two guide timbers (see Figs. 90-92), which are about 14 inches square, are notched and bolted to the posts upon the same side as the cam shaft boxes, and are in the clear, about 3 feet distant above and below respectively from the center of the cam shaft. The lower timber is frequently made a little larger than the upper. They usually extend the length of the two or four batteries, according to the frame used. These guide timbers must be far enough apart to allow for the sweep of the cam, plus the height of the tappet, with sufficient clearance. On the inner side of the guide timbers are the guides (see Fig. 91*a*).

§ 136. GUIDES are provided to keep the stamp rods vertical while they rise and fall; to this end their chief duty is to resist the side thrust of the cams. In the various designs that have been adopted, simplicity and the reduction of friction and wear are the main features sought.

The ordinary guide (see Fig. 97) is of two planks, each 3 to 8 inches thick and 12 to 19 inches wide, yielding a bearing of that length. Half the bearing for the stamp stem is cut from each plank with the grain horizontal. At the Homestake mill they are held to the guide timbers by eight ⅞-inch bolts. At the start they are shimmed apart and as they wear, the shims are thinned in until they are taken out altogether, and as they wear further, the inner surfaces are planed off to restore the diameter of the holes. During this period they are lined up by putting in shims between the rear guide and the guide timbers. The woods are preferred in this order: Oak, hickory, heart of maple, and pine. At the Oriental mill, Victoria, eucalyptus guides last 16 years.[21]

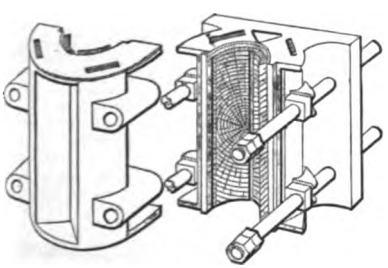

FIG. 101.—ALLIS GUIDE.

Wooden guides with grain parallel to the stamp stem, called parallel grain bearings, give less friction and last longer than those with horizontal grain.[72] To get these bearings, sectional guides must be used. An additional advantage of sectional guides is, that the blocks of one bearing can be removed without disturbing those of the next, and adjustment can be made for each individual stamp.

At Mill 62, ordinary guides of maple are used until worn out. Then square holes are cut in them and bushings of maple or beech, made in halves, are put in to take the wear.

A soft wood guide with large holes and four hard wood keys, forming four parallel grain bearings for each stem, overcame the cost of renewing soft wood guides.[233] The take up of this and all the preceding forms of guides except the ordinary form is to allow for both side and end wear.

A cast-iron guide with vertical wood bearings is shown in Fig. 98. The Acme guide is shown in Fig. 99. The Fargo guide is shown in Figs. 100*a* and 100*b*. The take-up of the Fargo and Acme is for end wear only. An iron guide lined with hard wood, with end grain is shown in Fig. 101. The take-up of this is for both side and end wear.

Mill 64 uses on ten stamps plain, sectional, cast-iron guides without babbitt, with the hard scale removed by an emery wheel. They are called the Globe battery stem guides. After six months' use they show no wear on the guides or stems, and are very handy for repairing one stamp at a time, and they keep the stem in a vertical position better than the ordinary form.

The Tenth U. S. Census[233] gives cast iron babbitted, cast iron lined with raw hide, and brass, as being used for guides, but notes nine instances only of iron guides, while it records 244 of wood. Iron guides are quite generally used in Australia.[21]

Table 86 shows the details of the guides found in the mills. It is noteworthy that the ordinary guide occurs in 17 out of 25 mills. The millmen prefer it over the patent guides on the market on account of its simplicity. They claim that the latter have too many bolts, nuts and wedges in their make up, and are, therefore, very bothersome to change and readjust.

TABLE 86.—GUIDES.

Mill No.	Pattern.	Material.	Length Along Stem.	Thickness. (Both Halves.)	Life.	Greased by
			Inches.	Inches.		
27	Ordinary	Pine				Grease scraped from journal boxes in mill.
55	Ordinary	Maple	14	8	9 months	Tallow.
56	Ordinary	Hard wood		6	1 year or more.	Fraser's axle grease.
57	Ordinary	Wood	(a)	(b)	10 years	Machine oil.
58	Ordinary	Maple				
59	Ordinary	Oak or hard pine				
60	Ordinary	Oak				
61	Ordinary	Oak		7½	Over 5 years	Graphite grease.
62	Ordinary	Maple	(c)	7		Mixture of graphite, tar and tallow.
64	Ordinary (d)	Oak or maple			3 years	Albany compound.
	Sectional (e)	Cast iron				Albany compound.
65	Sectional	Cast iron (f)				
66	Ordinary	Oak or pine			Oak, 18 months Pine, 4 months.	Mixture of graphite and linseed oil.
67	Sectional (g)	Yellow birch	14		2 years without planing	Hot tallow and graphite at start. (h)
68	Acme	Wood				
71	Ordinary	Wood				
72	Fargo	Wood				
73	Sectional	Cast iron (f)				
74	Sectional	Cast iron (f)				
75	Ordinary	Maple				
76	Ordinary	Oak				Boiled in tallow at start
77	Ordinary	Pitch pine	12	6		Fraser's axle grease.
83	Acme	Wood				
83	Fargo	Wood				
84	Fargo	Wood				
87	Ordinary	Wood				Axle grease.
88	Ordinary	Hard wood				

(a) Top=18 inches; bottom=19½ inches. (b) Top=11 inches; bottom=14 inches. (c) Top=12 inches; bottom=16 inches. (d) On 30 stamps. (e) On 10 stamps. (f) Wood lined. (g) Held to guide timbers by bolts 2⅝ inches in diameter and diagonal cast-iron washers ½ inch thick. (h) Little or none afterward.

The guides are lubricated to overcome friction and so to give the maximum speed of drop of the stamps. Fluid animal and vegetable oils are bad because they sicken the mercury on the amalgamated plates. On this account the guides should be sparingly lubricated, and that with solid lubricants, such as are given in the table. The Albany compound mentioned, is much like axle grease. In Tasmania an instance is given of stamps crushing tin ore in which the guides are hollow cast iron filled with tallow. Hard soap is used by many and commended because soap brightens amalgamated plates. Hard wood guides should be soaked with linseed oil before mounting them. Iron guides babbitted, require far more lubrication than wood.

§ 137. PLATFORMS.—These are needed to stand upon to lubricate the guides and cams, and to tend the tappets and stamps generally. The platform must be placed on the opposite side from the cam shaft and it is usually continued around the other side. If in front, it is liable to cut off light. It should be strong, have a tight floor and a railing.

§ 138. FORMS OF FRAMES.—Braces and tie-rods are used with the posts and sills to complete the frames, and the frames so made have received different names according to the way in which they are combined. Wooden braces stiffen the frame, but iron tie-bolts occupy less room and can be tightened. If only

one kind can be used, it should be the wooden brace bolted to the cross sills and to the posts. Probably the best construction is a combination of the two.

There are two general classes of frames: *A* frames and *Knee* frames. Each

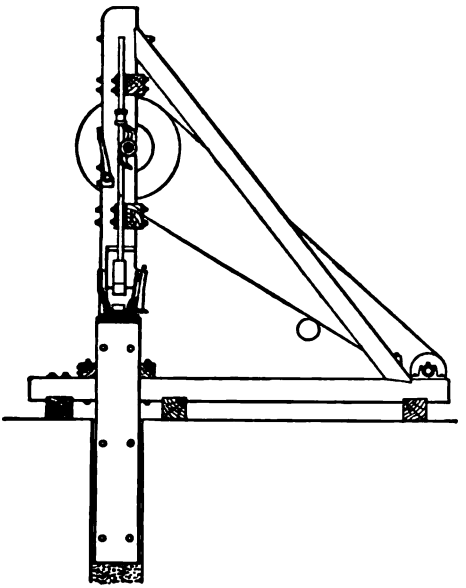

FIG. 102.—FRONT A FRAME WITH CAMS IN FRONT.

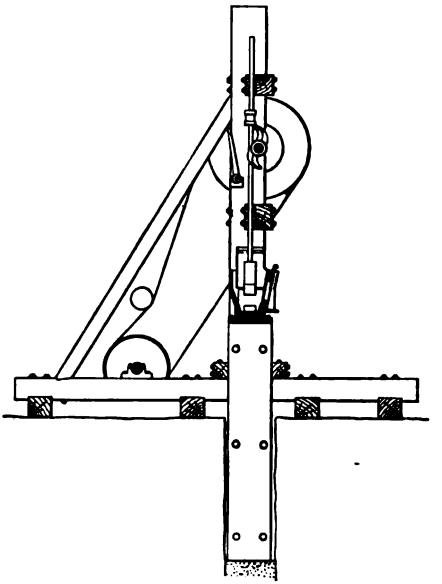

FIG. 103.—REVERSE A FRAME WITH CAMS IN FRONT.

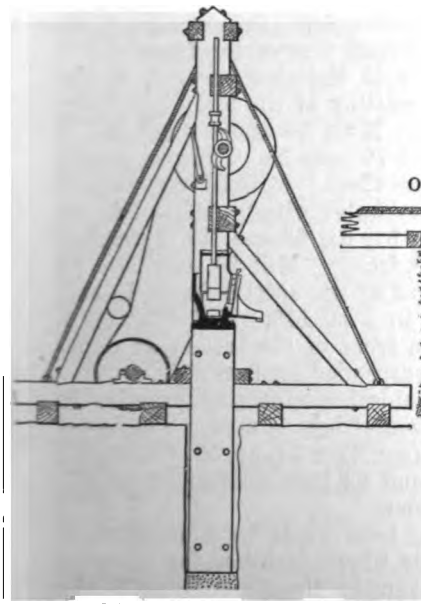

FIG. 104.—DOUBLE A FRAME WITH CAMS IN FRONT.

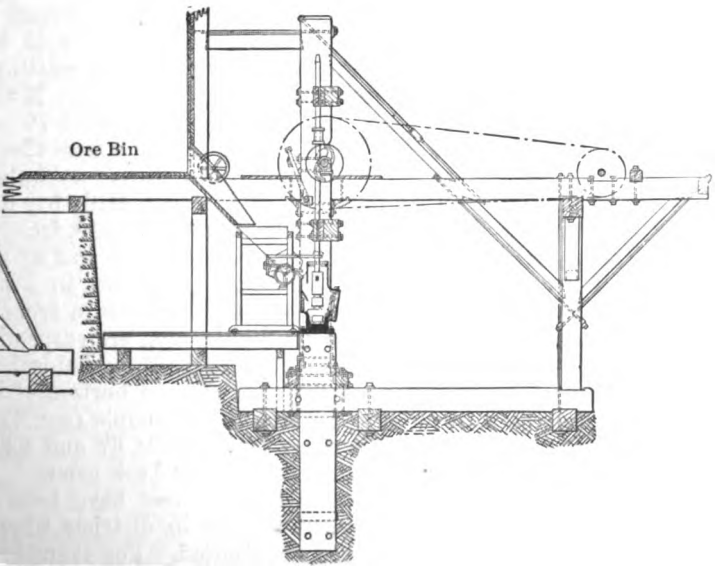

FIG. 105.—FRONT KNEE FRAME CONNECTED WITH BIN, CAMS IN FRONT.

of these has different varieties, as is shown by the following list of frames from mills and authors:

1. Front A frame with cams in front revolving away from the bin (see Fig. 102).
2. Front A frame with cams behind revolving toward the bin.
3. Reverse A frame with cams in front (see Fig. 103).
4. Reverse A frame with cams behind.
5. Double A or double brace with cams in front (see Fig. 104).
6. Front Knee connected with bin, cams in front (see Fig. 105).
7. Front Knee unconnected with bin, cams in front (see Fig. 106).
8. Front Knee unconnected with bin, cams behind.*
9. Front Knee with brace put down and with cams in front (see Figs. 107).
10. Front Knee with brace put down and with cams behind.
11. Back Knee or single post frame with cams in front (see Fig. 108).
12. Back Knee or single post frame with cams behind.
13. Back Knee with a brace with cams in front (see Fig. 109).

A frames (1 to 5) are adapted for light stamps under 750 pounds, being simple and less expensive. Front A (1 and 2) is suitable for hand feeding. Reverse A (3 and 4) is good where mechanical feeder is used, as it leaves the front open for observation. Double A (5) is to be used where great strength is needed.

The Front Knee (6 to 10) is the heaviest and most expensive. It is the best for heavy stamps, and is the best in regard to solidity, position of shafting and wear of belting, as it allows large pulleys and horizontal belts with no tightener. The shafting and belt are out of the way, up where it is clean and dry.

The Back Knee frame (11 and 12) is strong and compact, but the main shaft has to rest on the sills, which is an inconveient place. It is not suitable for hand feeding. It is suitable for a cam shaft driven by gears. It has a great advantage in its uninterrupted view of the plates of the whole mill.

These forms are modified and combined to a certain extent; for example, (13) is a back knee with a front brace which is shorter than that of the front A.

F. S. Pheby[191] condemns framing the ore bin with the stamp frame, as the latter is liable to be thrown out of line with the settling of the bin.

The frames were found in the mills as follows: Mills 55 and 64 use No. 1 frames. Mills 27 and 87 use No. 3 frames. Mill 76 uses No. 4 frame, except that the belt runs horizontally back to the water wheel. Mill 56 uses No. 6 frame, except that the belt is connected direct to water wheel. Mills 58, 59, 65, 73, 74, 75 use No. 6 or No. 7 frames. Mills 57, 61, 62 use No. 7 frames. Mill 67 uses No. 8 frame. Mill 82 uses No. 10 frame. Mill 84 uses No. 11 frame. Mill 68 uses No. 12 frame. Mills 77 and 88 use special forms to suit their gear transmission. The former is shown in Fig. 146. Mill 72 uses a back knee frame and in order to have the view in front of the battery as unobstructed as possible, all troughs, lights, etc., are suspended on iron rods.

It is more in accordance with the best mechanical engineering practice to drive by the under part of the belt where a horizontal belt is used. The usual mill practice seems to have ignored this principle (see Mills 57, 58, 59, 61, 62, 65, 73, 74, 75), while on the other hand, Mills 67 and 82 have conformed to this principle by using front knee frame with back cams.

§ 139. Stamp Frames of Iron.—These have been made by a number of manufacturers in recent years for use in districts where facilities for securing timber and having it framed are limited. For example, the Union Iron Works

* Since writing the above it has been learned that Mill 69 forms another class, having front knee frames connected with the bin, cams behind.

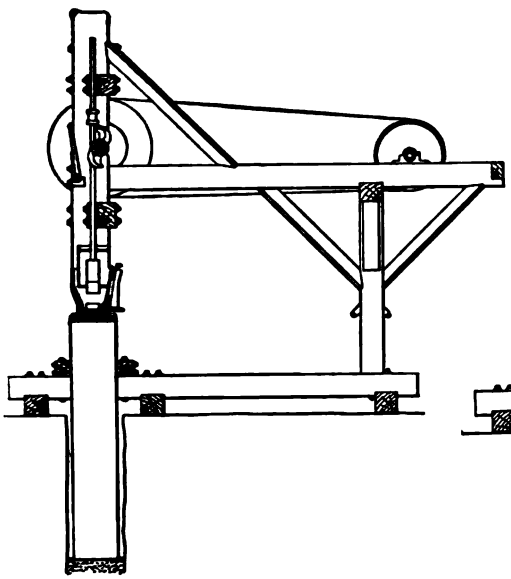

FIG. 106.—FRONT KNEE FRAME UNCONNECTED WITH BIN, CAMS IN FRONT.

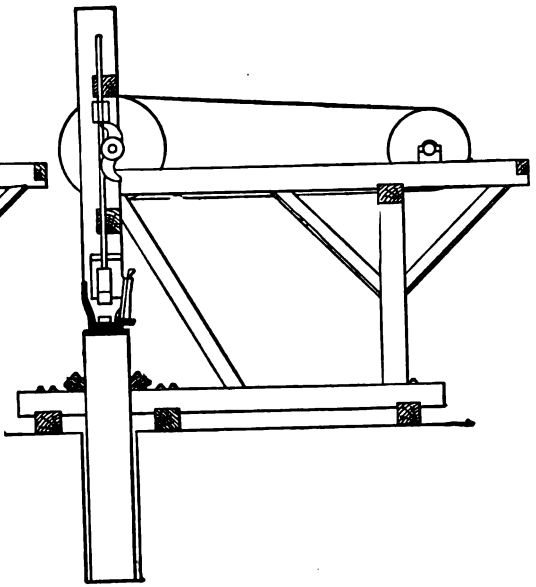

FIG. 107.—FRONT KNEE FRAME WITH BRACE PUT DOWN AND WITH CAMS IN FRONT.

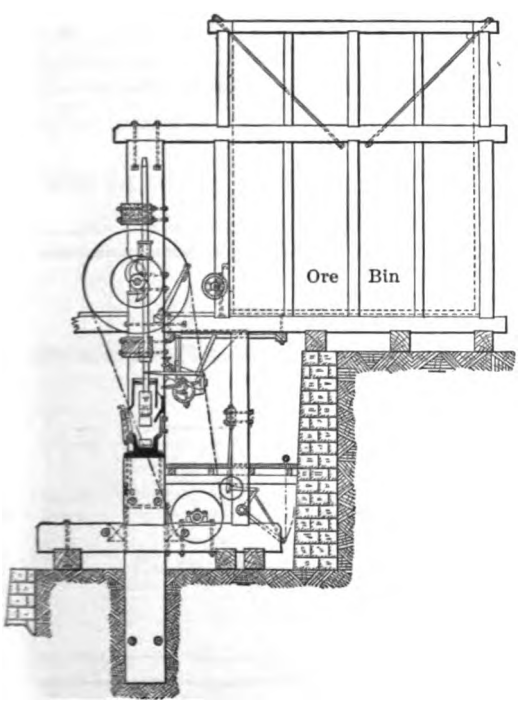

FIG. 108.—BACK KNEE OR SINGLE POST FRAME WITH CAMS IN FRONT.

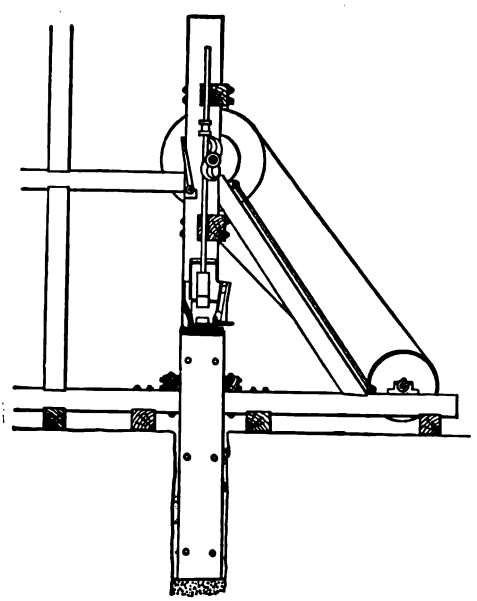

FIG. 109.—BACK KNEE FRAME WITH A BRACE WITH CAMS IN FRONT.

made frames of steel channel beams for 100 stamps for the Compania de Huanchaca de Bolivia. In this form (see Fig. 110) each post is composed of four channel beams on end, blocked apart with castings, suitable for holding: (*a*) the guides, (*b*) the cam shaft, (*c*) a flange or foot upon which the post stands and by which it is bolted to the cross sills, and (*d*) two tie-rods connecting its top to the cross sill.

A simple reverse A frame is made of steel in which the cross sills, the braces and the posts are compound girders with two channel beams each.[20] Of this several have been sent to Africa.

Cast iron is especially advocated for frames, as it does away with tie-rods and braces and makes a compact, handy frame which has not the elasticity of steel.

Iron frames are not uncommon in Bendigo, Australia.[21]

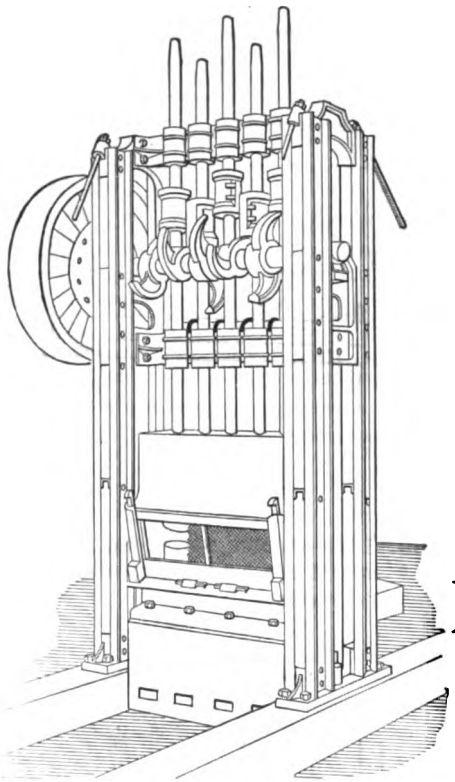

FIG. 110.—IRON STAMP FRAME.

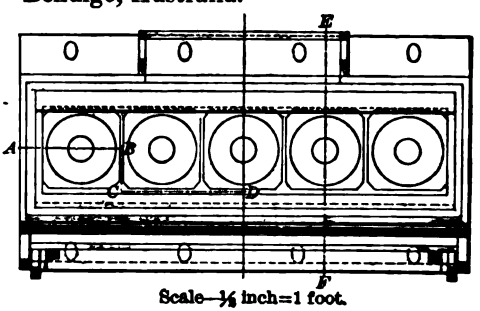

FIG 111*a*.—PLAN OF THE HOMESTAKE MORTAR.

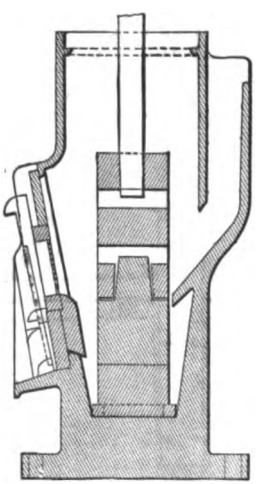

FIG. 111*c*.—SECTION ON *EF*.

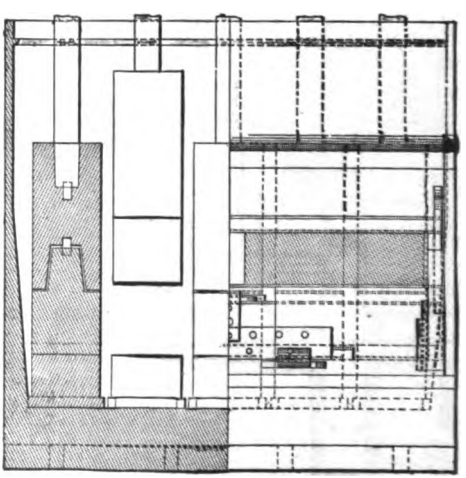

FIG. 111*b*.—HALF SECTION ON *ABCD* AND HALF ELEVATION.

A sectional iron and wooden stamp frame with built up posts was made in England and sent to Durango, Mexico.[136] The posts, the cross sills and the

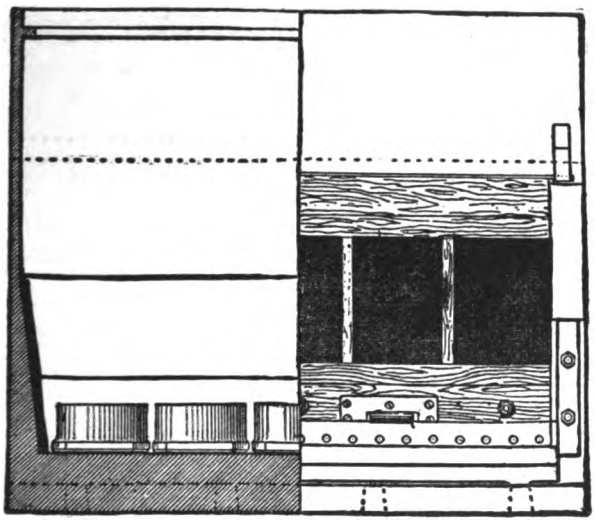

FIG. 112*a*.—FRONT VIEW OF THE NORTH STAR MORTAR.

braces were of pitch pine planks, 3 to 4 inches thick. Between the planks and on the outside, were thin plates of mild steel, and the whole was bolted together.

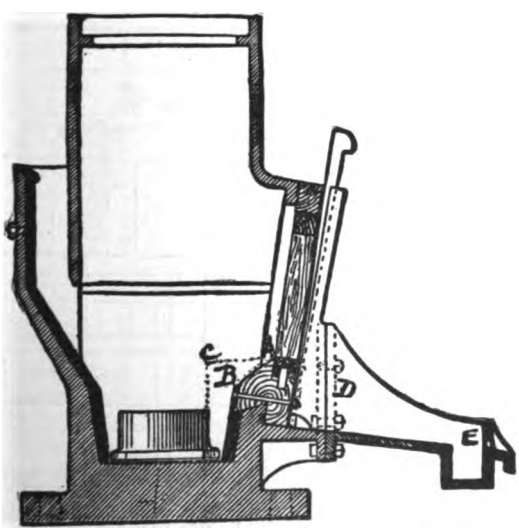

FIG. 112*b*.—END VIEW OF THE NORTH STAR MORTAR.

§ 140. MORTARS are boxes of cast iron, or of wood and cast iron, in which the operation of stamping takes place. They have the following functions: (1)

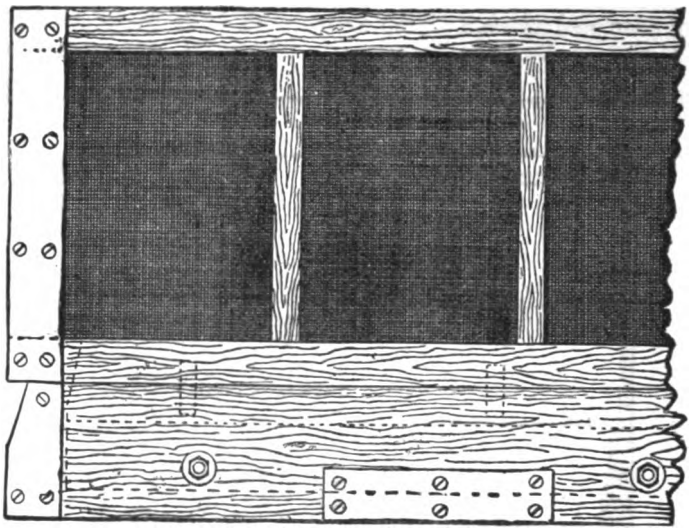

FIG. 112*c*.—SCREEN OF NORTH STAR MORTAR.

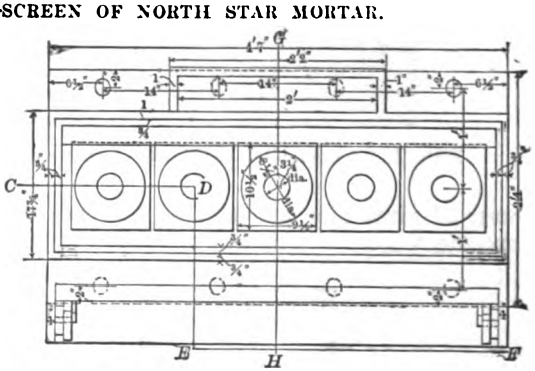

FIG. 113*a*.—PLAN OF THE OLDHAM MORTAR.

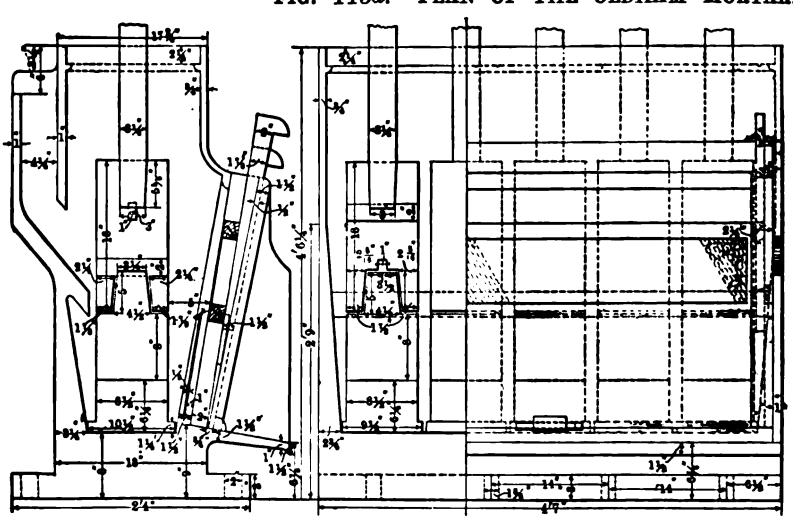

FIG. 113*c*.—END SECTION ON *GH*.

FIG. 113*b*.—FRONT VIEW ON *CDEF*.

to receive the ore from the feeder; (2) to place it under the stamp; (3) to give the stamps freedom to strike their blows; (4) to discharge the water and pul-

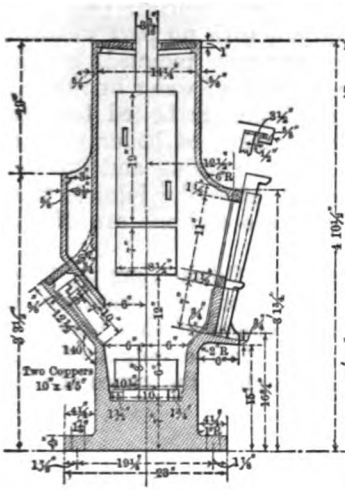

FIG. 114*b*.—END SECTION.

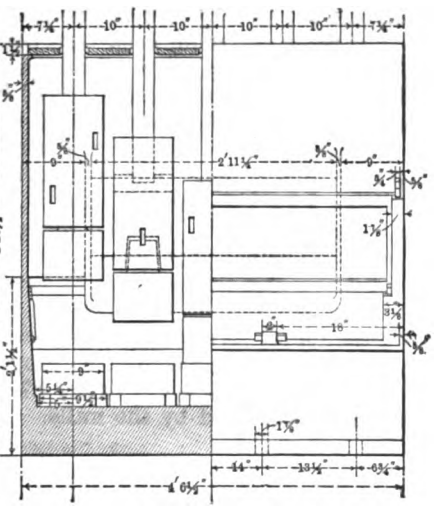

FIG. 114*a*.—HALF SECTION AND HALF FRONT ELEVATION OF NEWTON MORTAR.

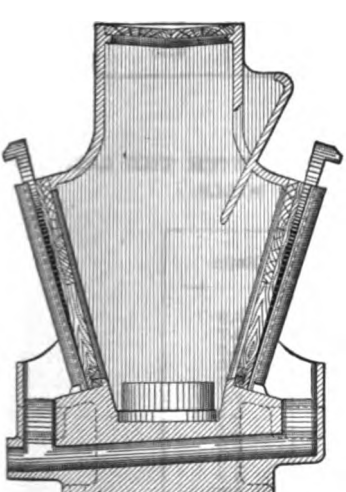

FIG. 115.—DOUBLE DISCHARGE MORTAR.

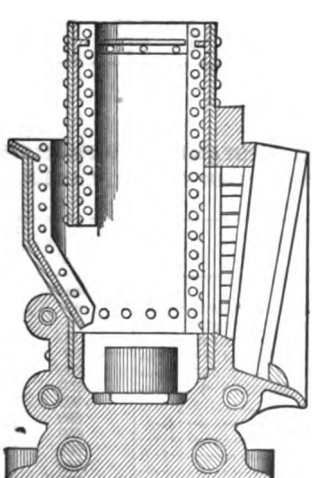

FIG. 116*a*.—CROSS SECTION OF SECTIONAL MORTAR.

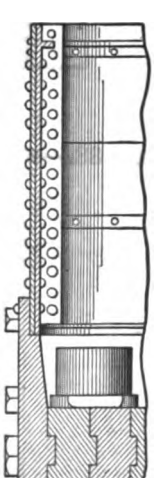

FIG. 116*b*.—PART OF LONGITUDINAL SECTION.

verized ore or pulp, and often to amalgamate gold. Various designs of mortars are shown in Figs. 111*a* to 115.

The mortar proper is made of cast iron. The best material to withstand the continual vibration is a tough, uniformly fine-grained, gray iron.[19] The bottom should be planed to give it a true bearing on the mortar block.

While mortars are usually cast in one piece, sectional mortars (see Figs. 116*a* and 116*b*) are made for mule back transportation, with no part weighing over 300 pounds. The bottom is of cast iron in sections, tongued, grooved and planed. This planing is so true that there is no leak of water or mercury, and no packing is needed.* The sections of the bottom are bolted together with end bolts, the sides and ends of the housing are made of boiler iron and are riveted together in position. The joint between the housing and the bottom is made by putting in a thin strip of copper, which, after the joint is riveted, is caulked to a tight joint.* In some designs all the sections are of cast iron flanged, planed and bolted together.

Mortars of wood and iron (Mill 77) are used in Gilpin County, Colo., (see Fig. 96). They are lighter and cheaper in first cost than cast-iron mortars. They have been found suitable for the peculiar problem of that place.

The weight of the mortar should be proportional to the weight of the stamp to get like conditions of impact. Tables 87 and 88 show the ratios advocated by authors and also those used by the mills.

TABLE 87, FROM LOUIS,[19] GIVING WEIGHTS OF STAMPS AND MORTARS TOGETHER WITH RATIOS OF ONE TO THE OTHER, PROVED BY EXPERIENCE.

Weight of Stamps.	Weight of Mortars.	Ratio.	Weight of Stamps.	Weight of Mortars.	Ratio.
Pounds.	Pounds.		Pounds.	Pounds.	
950–1,000	6,384	6.73–6.39	650	3,696	5.69
900	5,600	6.22	550	3,360	6.11
850	5,040	5.94	500	3,136	6.27
750	4,480	5.97	400	2,464	6.16
700	4,032	5.77			

TABLE 88.—WEIGHTS OF STAMPS AND MORTARS, TOGETHER WITH THE RATIOS OF ONE TO THE OTHER, TAKEN FROM THE MILLS.

Mill.	Weight of Stamp.	Weight of Mortar.	Ratio.
	Pounds.	Pounds.	
Homestake (Hofman[46])....	850	5,000	5.9
Caledonia (Hofman[46])....	850	5,700	6.7
Homestake (Rickard[48])....	850	7,300	8.6
Father de Smet (Bowie[38])..	758	5,000	6.6
Keystone (Egleston[37])....	750	5,400	7.2
Bobtail (Rickard[48])....	550	5,000	9.1
Mill 27....	800	5,500	6.9
Mill 55....	850	5,200	6.1
Mill 56....	650	4,000	6.2
Mill 61....	960	5,600	5.8
Mill 64....	800	5,500	6.9
Mill 68....	800	4,750	5.7
Mill 82....	980	5,290	5.6

Tables 89 and 90 show the dimensions of mortars in a few mills, together with the rate of crushing.

* Fraser & Chalmers, private communication.

TABLE 89.—MORTARS.

Abbreviations.—Lbs.=pounds; In.=inches.

Mill.	Weight of Mortar.	Length of Mortar Base, Outside.	Width of Base, Outside.	Length of Mortar, Inside, at Bottom	Height of Mortar, Outside.	Width of Mortar, at Top, Inside.	Thickness of Bottom.	Thickness of Flanges.	Width of Flange.	Thickness of Sides at Dies.	Thickness of Sides at Top.
	Lbs.	In.	In.	In.	In.	In.	In.	In.	In.	In.	In.
Homestake (Hofman[40], 1889)	5,400	54¾	27¼	50	54½	16	7½	3	5	3½	¾
Homestake (Rickard[46], 1895)	7,300	56¾	28¼	.....	58¼	.....	.....	.....	.....	.....	.....
Caledonia (Hofman [40])	5,700	54	.....	50½	57½	13½	7	3	4½	4¼	¾
Father de Smet (Bowie[38]) (*b*)	*d*4,900	.....	25	.....	49	13	8	3	3½	3¼	1
Oldham (Hardman [158])	5,700	55	28	49½	54¼	16	8	3	5	*a* 3¼	1
North Star (Abadie [45]) (*c*)	.....	.....	29½	.....	49	17¼	6	3	5	3	1½
North Star (Rickard [46]) (*c*)	.....	60	29½	53	51½	17	6	3	5	3	1
Bobtail (wooden sides) (Rickard)	5,000	.....	.....	.....	(*e*)	18	4¼	.....	.....	(*f*)	.....
Newton [130]	.....	54½	23	50	50½	14¼	7	2	4¼	2¼	⅝
Phœnix [124]	.....	.....	28	.....	57	16½	7½	3	5	2⅝	¾
Mill 56	4,000	54	.....	49	48	.....	.....	.....	.....	2½	.....
Mill 62	.....	56	.....	48	60	16	.....	.....	.....	.....	.....
Mill 64 (*b*)	5,500	57	27	.....	50	16½	6¼	2¾	5	2½	1¼

(*a*) At ends, 2¾ inches. (*b*) All dimensions exclusive of linings. (*c*) All dimensions exclusive of a lining 1 inch thick. (*d*) Including lining. (*e*) Total, 49¾ inches; iron, 9 inches. (*f*) Iron, 2¾ inches; wood, 9½ inches.

TABLE 90.—MORTARS.

Abbreviations.—In.=inches; Lbs.=pounds.

Mill.	At Level of Discharge, Inside Dimensions, from Center Line Forward to Bottom of Working Screen Surface.	Ditto, backward.	At Level of Top of New Die, Inside Dimensions, from Center Line Forward.	Ditto, backward.	Width at Bottom, Inside.	Height of Screen Opening in Casting.	Height of Screen, Net.	Height of Sill Above Bottom, Inside.	Height of Discharge.	Height of Die.	Diameter of Shoe.	Weight of Stamp.	Drops per Minute.	Tons Crushed per Stamp per 24 Hours.
	In.	In.	In.	In.	In.	In.	In.	In.	In.	In.	In.	Lbs		Tons.
Homestake (Hofman[40], 1889)	9½	7¼	6⅝	6⅜	10½	21¾	7	8¾	10	6¼	9	850	85	4.5
Caledonia (Hofman [40])	(*b*)	(*b*)	.....	....	10	17	5⅜	13	6	7	8	850	74	3.3
Father de Smet (Bowie [38])	8½	8¼	6¼	6¼	10¼	17	14½	10½	6½	5	8½	850	85	4.5
Oldham (Hardman [158])	9¼	7⅝	6¾	6¼	10½	27	7¾	2	9	6¼	8½	858	85	2.8–3
North Star (Abadie [45])	11	10	.....	....	13½	20	13	6½	4–6	....	....	875	86	.....
North Star (Rickard [46])	10½	10½	7½	7¼	14	20½	12¾	6	2–6	5	9	850	84	1.6
Bobtail (wooden sides) (Rickard)	.....	....	.....	....	....	11	....	14	.....	....	....	....	....	.....
Newton [130]	10	9	9¾	9¾	10	18¾	11	10½	12	6	8½	750	30	.....
Phœnix [124]	.....	....	6⅜	6⅜	12⅝	21¾	....	10	.....	6½	8¾	....	....	.....
Golden Star (Rickard[46], 1895)	(*c*)	(*c*)	.....	....	....	.....	....	....	9–11	....	....	850	85	4
Hidden Treasure (Rickard, 1895)	(*d*)	(*d*)	.....	....	....	.....	....	....	13–15	....	....	550	30	1
Mill 55	8½	7½	8½	....	....	.....	21	....	3	6½	8½	850	100	4
Mill 56 (*a*)	8	9	.....	....	....	.....	10	....	2½–4	7	8	650	105	6
Mill 61	12⅛	5⅞	10⅝	5¾	....	.....	5½	....	5–6	5	9	960	105	3
Mill 62	.....	....	.....	....	10¾	.....	7	7	6–7	7	8½	1100	102	2–3
Mill 64	12¾	9¼	8¾	8	13	21	11	7½	6–6½	7½	9	800	96	3.1

(*a*) Double discharge. (*b*) Total inside width at level of discharge is 16 inches. (*c*) Total inside width at level of discharge is 12½ inches. (*d*) Total inside width at level of discharge is 24 inches.

The mortars, as will be seen from Table 90, vary much in width and also in height of discharge, that is, the height of the lower edge of the screen above the top of the die. These two dimensions are most important in considering the duties a mortar is to perform. In general, we may say, the lower the discharge, the more rapid will be the stamping, the quicker will the screens wear out, the coarser will the pulp be, and the poorer will be the battery amalgamation. These qualities will all be reversed with high discharge. Again, the narrower the mortar, the faster will it stamp. By combining these two ideas, we see that a narrow, somewhat deep mortar (Fig. 111*c*), is the best combination to obtain rapid stamping, and good battery amalgamation. The space behind or in front

of the shoe must be larger than the maximum size of ore fed, to prevent the stamp from becoming wedged against the side. In the case of ores which require extremely fine pulverization, as for example, the Gilpin County ores of Colorado, the slow stamping, deep, wide mortar (Fig. 96) still finds favor.

§ 141. MORTAR LININGS.—These are replaceable parts which save the mortar from wearing out. They are generally made of chilled iron and may be put upon one or all of the sides of the mortar. They are particularly advantageous in locations remote from a foundry. If the mill is far from a foundry, there should be five lining plates,[40] four around the bottom and one in the mouth. These will have a total weight of 500 pounds.[74] The corners should be mitered with 45° angle to hold them in place.[19] The life as given by Hofman,[40] is one year, while Eissler[7] gives three to six months for chilled cast iron, 1 inch thick. The Australian practice is to use liners in four parts, 1 inch thick.[21]

The practice in the mills is as follows: Mills 27, 55, 56, 62, 67, 76, 77, 87, 88 use no liners. Mills 58, 72, 75 use replaceable linings.

Mill 57 (see Figs. 112*a* and 112*b*) uses chilled iron lining 1 inch thick. The end liners last three months and the back and front liners last a year. The back liner weighs 175 pounds, end 66 pounds and front 75 pounds. The back liner is 1½ inches thick where the ore drops on it from the feed chute. Iron costs 3¾ cents per pound and sells for 1½ cents.

Mill 59 has cast-iron replaceable linings 1 inch thick. They cost 5 cents per pound, sell for 1½ cents and last six months.

Mill 61 has wooden liners in the backs of four mortars, these being somewhat wider than the other four mortars.

Mill 64 uses front, back and end liners of cast iron 1 inch thick. A set weighs 300 pounds when new, 200 pounds when worn out and lasts 12 months. Iron costs 3½ cents per pound and sells for 2 cents.

Mills 65, 73 and 74 formerly had no linings, but Loring[50] reports that they were afterward put in when the thickness of the sides of the mortar had become worn down to ⅜ inch. In order to do this it was necessary to reset the stamps so that they should be 9¼ inches apart center to center, or ¾ inch apart between shoes instead of 10 inches apart center to center as formerly. This gained a space of 1½ inches at each end, into which the end linings were placed and served as keys for the front and back linings. The back lining was 13 inches high and sloped 77½°, the foot being 1½ inches from the base of the die, thereby delivering the ore better upon the die. It was made with an iron face and wooden backing in order to save iron.

Mill 66 has liners ⅞ inch thick on the sides and ½ inch thick on the feed hopper.

Mills 68 and 82 have end linings only, of boiler iron ¼ inch thick and 12 inches high.

Mill 84 has end linings only. They are of steel ½ inch thick. Each end weighs 31 pounds when new, 8 pounds when worn out. They cost 5 cents per pound.

The Father de Smet mill used liners 1 inch thick.[35]

§ 142. THE MOUTH OR FEED OPENINGS.—At the Homestake mill the mouth begins 6½ inches below the top of the mortar (Figs. 111*a*-111*c*) and is 24 inches long, 4½ inches wide, 15 inches deep before entering the mortar. Under the feed is a lip 1¼ inches thick, designed to deliver the ore against the top of the shoe. The line of this lip if produced, would project the ore three-quarters of the way across the mortar. This lip is necessary where the mortar is double discharge, or where a back amalgamating plate is used. Some authorities think it is an advantage on any battery, as it delivers the ore nearer the center of the die than the other form.

The Caledonia mortar has a mouth 3 inches wide extending the whole length of the mortar. The North Star mortar has a mouth opposite the three middle stamps only. The latter seems to represent the best practice in this country, while Louis recommends that it extend to the middle of the end stamps.

§ 143. MORTAR COVERS.—(See Figs. 114*a* and 114*b*).—Two planks 2 to 3 inches thick, with half the hole for each stamp cut from each plank, are used to cover in the open top of the mortar. Holes are also cut for feeding water. The planks rest on a ledge around the inside of the mortar top.

§ 144. SCREEN OPENINGS.—These are provided in front or both back and front of the mortar. The former is called single issue (see Figs. 111*a*-114*b*) and is commonly used where battery amalgamation is practiced. The latter (see Fig. 115) is called double issue, and is used chiefly for dry crushing or in wet crushing where maximum crushing capacity, or minimum sliming of ore is the object sought. The front face of all four sides of this opening are planed to give the screen a flat bearing and a tight joint.

The distribution of single and double issue batteries among the mills studied is as follows: Mills with single issue are: 55, 57, 58, 59, 60, 61, 62, 63, 64, 66, 67, 68, 70, 72, 73, 75, 76, 77, 85 and 88. Mills with double issue, but with only the front one used are: 71, 74, 82, 83. Mills with double issue both used are: 27, 53, 56, 84, 87; the reasons for these will be understood by referring to the outlines of these mills in Chapter XX. Mills 27, 84 and 87 bring the rear discharge through a canal 4 inches in diameter cast from back to front in the bottom of the mortar, as shown in Fig. 115, while Mill 56 has front and rear outside amalgamated plates. At Clunes, Australia, all the mills use double issue with no battery amalgamation.[21] When the rear discharge is not used it is closed by boards which, to prevent wear, are faced with ½-inch iron plate which is blocked forward near the stamps to increase rapidly of stamping.

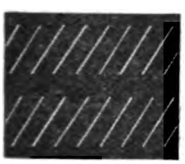

FIG. 117.—CLEAR PUNCHED HOLES.

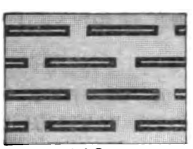

FIG. 118.—BUHR PUNCHED HOLES.

§ 145. THE SCREEN (see Fig. 90) is mounted in a wooden frame and is often divided into several panels as in Fig 112*a*. Screens are made either of punched plate or wire cloth. The holes in plate are either round or slotted, while those in cloth are square or nearly so.* The efficiency of stamp screens depends upon (1) the size of hole, (2) the percentage of opening, that is, the ratio of open space to the net screen area.

§ 146. PLATE SCREENS.—The method of punching is not without influence. Round holes used for coarse stamping, namely 0.04 inch (1 mm.) in diameter and above, and for medium stamping, about 0.03 inch (0.75 mm.) in diameter, are always clear punched, likewise slots for similar work (see Fig. 117); but for fine stamping, 0.02 inch (0.5 mm.) in diameter and less, the latter are generally buhr punched (see Fig. 118), because a thicker plate can be used. A clear punched hole is made by a tool which has a square, sharp edge and which cuts out a wad of exactly the size and shape of the hole. The buhr-punched hole is made by a thicker tool which makes an indentation in the plate when lying on a socket in the die, just deep enough to tear the metal asunder.

The smallest practicable clear punched hole would seem to be about 0.014 inch (0.35 mm.) in width. The limit is governed by the fact that the punching tool is more liable to break, thereby increasing the cost of the screen, when it is attempted to punch a hole of much less diameter than the thickness of the

* See Table 258; also Louis[10], p. 127, for holes made purposely oblong in cloth screens.

plate. The most extreme case found by the author is in Mill 86, Table 95, where the width of the slot is 54% of the thickness. Holes less than 0.014 inch wide require plate so thin that it has not sufficient strength. The size of holes in buhr-punched screens is limited by the ability to regulate the space torn.

§ 147. ARRANGEMENT OF HOLES.—Slots are punched either vertical, diagonal or horizontal, and either in line or staggered. When the slots are staggered, the strains due to punching are distributed. For discharging the particles with diagonal slots or horizontal slots, staggered, every grain which slides down the screen plate passes over the slots; with the vertical slots a limited number of grains only will be in line with the slots. This apparent advantage of the former two classes of screen may be partly or wholly neutralized by the wash of the stamps.

FIG. 119.—HOLES ARRANGED IN 60° ROWS.

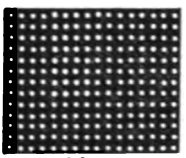

FIG. 120.—HOLES ARRANGED IN 90° ROWS.

Round holes are arranged in rows making either 60° or 90° with each other (see Figs. 119 and 120). As shown in Table 91 the former gives 1.154 times as much percentage of opening as the latter when the diameters of the holes and the spaces between them are the same. Table 93 at 90° gives a little higher percentage of opening than Table 94 at 60°, but this is done by having narrower spaces between the holes.

TABLE 91.—SHOWING THE PERCENTAGES OF OPENING OBTAINED WITH HOLES LAID OUT IN 60° AND 90° ROWS, WITH VARYING RATIOS OF SPACE TO DIAMETER OF HOLE.

Space between Holes.	Percentage of Opening.		Ratio of 60° to 90° Arrangement.
	With 90° Rows.	With 60° Rows.	
Equals ½ the diameter....	34.91	40.29	1.154
Equals the diameter.....	19.63	22.67	1.154
Equals twice the diameter	8.73	10.07	1.154

Tables 92, 93 and 94 give the proportions used by different manufacturers in making plate screens; Table 95 gives details of plate screens from the mills.

TABLE 92.—GIVING HARRINGTON & KING'S SCREENS WITH ROUND HOLES LAID OUT IN EQUILATERAL TRIANGLES (60° ROWS).

Number of Needle.	Diameter of Hole.		Space between Holes.	Thickness of Plate.	Ratio of Holes to Thickness.	Percentage of Opening.
	Inches.	Mm.	Inches.	Inches.		%
7	0.025	0.635	0.064	0.01264	1.98	16.4
6	0.028	0.711	0.062	0.01419	1.97	20.5
5	0.032	0.813	0.027	0.01594	2.01	26.8
3	0.042	1.070	0.099	0.0190	2.21	31.4

TABLE 93.—GIVING MUNDT'S SCREENS WITH ROUND HOLES LAID OUT IN SQUARES (90° ROWS).

Trade Number.	Diameter of Hole.		Space between Holes.	Thickness of Plate.	Ratio of Holes to Thickness.	Percentage of Opening.
	Inches.	Mm.	Inches.	Inches.		%
00	0.020	0.508	0.020	0.0201	1.00	19.63
0	0.023	0.584	0.0187	0.0201	1.14	23.98
1	0.027	0.686	0.0230	0.02357	1.20	29.90
2	0.033	0.838	0.0226	0.03196	1.03	37.71
3	0.039	0.990	0.0277	0.0403	0.97	36.86
4	0.045	1.140	0.0217	0.0403	1.17	35.78

TABLE 94.—GIVING HARRINGTON & KING'S SIZES FOR CLEAR PUNCHED SLOTTED SCREENS.

Number of Needle.	Diameter of Hole.		Space between Holes.	Thickness.		Ratio of Hole to Thickness.	Percentage of Opening.
	Inches.	Mm.	Inches.	Russia Gauge No.	Inches.		%
10	0.018	0.457	0.079	8	0.01264	1.42	13.0
9	0.020	0.508	0.077	9	0.01419	1.41	14.1
8	0.022	0.556	0.073	10	0.01594	1.38	15.5
7	0.025	0.635	0.071	11	0.01790	1.40	17.3
6	0.028	0.711	0.115	12	0.01900	1.47	13.5
5	0.032	0.813	0.111	12	0.01900	1.68	15.0
4	0.035	0.889	0.108	13	0.02010	1.74	16.9
3	0.042	1.070	0.101	14	0.02195	1.91	20.2
2	0.049	1.230	0.094	15	0.02434	2.01	23.6
1	0.058	1.470	0.085	16	0.03000	1.93	28.0

TABLE 95.—DETAILS OF PLATE SCREENS FROM THE MILLS.

Abbreviations.—B. Sl.=Buhr slot; B T Pl=Burned tin plate; Dols.=dollars; D. Sl.=Diagonal slot; In.=inches; N.=Needle; No.=Number; Pl.=Plate; R. 90°=Round holes arranged in 90° rows; R. I.=Russia iron; Sl.=Slot; Sq. In.=Square inches; T. Pl.=Tin plate; U T Pl=Unburned tin plate.

Mill No.	Material of Screen.	Thickness of Plate.	Shape and Arrangement of Holes.	Distance Apart of Holes.	Trade Designation of Screen	Size of Hole. (a)		No. of Panels.	Height of Panels.	Length of Panels.	Slope of Screen from Vertical.	Cost of Screens per Battery.	Life of Screen.	Percentage of Opening.	Total Area of Opening.
		In.		In.		In.	Mm.		In.	In.		Dols.	Days.	%	Sq. In.
57	T. Pl	0.016	R. 90°	0.094	.....	0.081	0.787	5	13	9	9° 28′	0.50	30	16.94	99.1
59	B T Pl	.....	R. 90°	0.095	.....	0.095	0.635	4 or 5	8	12 or 10½	10° 37′	0.625	15	19.68	82.4 or 75.4
60	U T Pl	.....	.....	.....	40 mesh	.....	.....	.....	.....	.....	.....	.....	14	.....	.....
61	U T Pl	0.015	R. 90°	0.094	.....	0.062	0.813	4	5½	(b)	12° 54′	0.52	15	26.06	70.3
62	U T Pl	.013 .016	R. 90°	0.096	.....	0.094	0.615	4	7	8	9° 28′	.....	.....	18.4	41.2
						0.029	0.751							23.3	50.0
64	R. I.	.....	Sl.	.....	No. 6 N.	0.027x0.375	0.686x9.53	2	11	24	4° 46′	1.20	20–35	.....	.....
65	B T Pl	0.018	R. 90°	0.095	.....	0.080	0.762	8	7	6	.....	0.40	c 14	22.9	76.9
66	R. I.	.....	.....	.....	No. 7 N.	0.094	0.610	.....	.....	.....	10° 0′	.....	14	.....	.....
67	R. I.	.....	(d)	.....	No. 6 N.	0.025x0.5	0.635x12.7	2	10½	(e)	10° 0′	2.60	18–24	.....	.....
70	Pl.	.....	.....	.....	.....	.....	.....	.....	.....	.....	.....	.....	.....	.....	.....
72	R. I.	0.023	D. Sl.	0.25	No. 8 N.	0.022x0.25	0.559x6.35	1	9	48	18° 26′	(f)	32	12.2	52.7
73	B T Pl	0.018	R. 90°	0.095	.....	0.080	0.762	7	7	(g)	.....	h0.40	c 14	22.9	70.5
74	B T Pl	0.018	R. 90°	0.095	.....	0.030	0.762	7	7	(g)	.....	0.40	c 14	22.9	70.5
76	T. Pl.	0.016	.....	.....	26 mesh	.....	.....	3	5½	12	9° 28′	.....	20	.....	.....
77	R. I.	i0.022 j0.037	(k)	(k)	No. 1½	(l)	i 0.432x9.53 j 0.787x9.65	1	9½	54	0° 0′	1.60	81	(m)	(n)
85	Pl.	.....	.....	.....	.....	.....	.....	.....	.....	.....	.....	.....	.....	.....	.....
86	R. I. o	0.022	(p)	0.16	.....	i0.017x0.375 j 0.08x0.375	i 0.432x9.53 j 0.762x9.53	.....	.....	.....	.....	.....	.....	(i) 4.9 (j) 8.6	.....
88	R. I. o	0.020	D. Sl.	0.08	.....	0.021x0.465	0.544x11.8	.....	.....	.....	.....	.....	7½	14.33	.....
89	R. I.	.....	(d)	.....	.....	0.025	0.635	.....	.....	.....	.....	.....	.....	.....	.....
q	R. I.	.....	B. Sl.	.....	No. 7 N.	0.094	0.610	2	9	24	10° 0′	.....	.....	.....	.....
r	Pl.	.....	.....	.....	No. 6 N.	0.027	0.686	.....	.....	.....	.....	.....	.....	.....	.....

(a) Where only one dimension of a slot is given, it is the width that is meant. (b) Two end panels are 11½ inches; two middle panels are 13 inches. (c) Sometimes as high as 30 days. (d) Diagonal buhr slot. (e) About 26½ inches. (f) Twenty-one dollars per dozen. (g) Two end panels are 7 inches; other five are 6 inches. (h) A dozen sheets, each 10x14 inches, cost $1.35. (i) When new. (j) When worn out. (k) Horizontal staggered buhr slot, ¼ inch apart horizontally, $\frac{1}{16}$ inch apart vertically. (l) Three-eighths of an inch long and slightly below 0.017 inch wide when new; 0.031x0.38 inch when worn out. (m) Slightly below 4.9% when new, 7.9% when worn out. (n) Slightly below 25 square inches. (o) These are screens used in Huntington mills and are put in here for purposes of comparison. (p) Vertical staggered buhr slot. (q) Oldham mill. (r) Father de Smet mill.

§ 148. COMPARISON OF ROUND HOLES WITH SLOTTED HOLES.—In Tables 92, 93, 94 and 95, it seems that for fine stamping the percentage of opening is about the same in either case; for medium stamping the round hole has much larger percentage of opening; but for coarse stamping, that is, larger than 0.04 inch (1 mm), it is probable that the slot will be at least as favorable, and may be more so than the round hole. For both shapes the percentage of opening decreases toward the fine end. For very fine stamping, where buhr slot is used, the percentage of opening is very low.*

* Mill 86, Table 95, has a screen of this class with only 4.9% of opening, while Rickard[160] says Gilpin County mills use buhr slot with 2.94%.

Slots should be less inclined to blind up than round holes, for in the former a particle will usually have but two points of bearing, while in the latter it will have three.

Round holes strain the plate more in the punching than the slotted, owing to the method of punching. For this reason it follows that for a given width of hole, while round holes may have a greater percentage of opening than slotted holes when the plate is thin, on the other hand, when the plate is thick, slotted holes which do not have to increase the spaces, will have a much greater percentage of opening than round holes, which do require an increased space between the holes. For example, to give an extreme case, Fraser & Chalmers state that to punch round holes 0.07878 inch (2 mm.) in No. 12 steel (0.109 inch thick), the spaces between the holes would have to be quite large, say ½ inch.

Slots will pass larger flat or elongated particles than round holes, in fact a more uneven product. This may make a slotted screen advantageous when stamping graphite, mica, or any laminated mineral.

§ 149. Placing the Screen.—All holes, whether clear punched or buhr punched, have more or less of a buhr, and this buhr is always placed toward the stamps to prevent blinding up the hole. This is true because the hole is slightly wedge-shaped and a particle which can enter the small end will free itself at the large, while the movement in the opposite direction might blind the holes.

§ 150. Cloth Screens.—These are woven of wire. They are single crimp or double crimp. In double crimp cloth the woof is crimped nearly as much as the warp; in single crimp, the woof is nearly straight. Double crimping prevents spreading of the wires. The cloth screens used in the mills visited are given in Table 96. They show that there appears to be no definite ratio between

TABLE 96.—DETAILS OF CLOTH SCREENS FROM THE MILLS.

Abbreviations.—B W G=Birmingham Wire Gauge; Dols.=dollars; In.=inches; No.=number; Sq. In.=square inches.

Mill No.	Material of Screen.	Diameter of Wire.	Meshes per Linear Inch.	Net Size of Hole.		Number of Panels.	Height of Panels.	Length of Panels.	Slope of Screen from Vertical.	Cost of Screen per Battery.	Life of Screen.	Percentage of Opening.	Total Area of Opening.
		B W G		In.	Mm.		In.	In.		Dols.	Days.	%	Sq. In.
27	Steel	22	16	0.0345	0.876	2	11	24	7° 8′	.....	1-5	30.5	322.1
53	Steel	20	16	0.0275	0.698	.....	.....	.....	.....	.....	.....	19.4	.....
54	Brass	.....	24	.....	.....	.....	.....	.....	.....	.....	.....	.....	.....
55	.....	22	14	0.0434	1.10	.....	21	(a)	20° 0′	(a)	10	36.9	387.5
56	Iron	(b)	8	0.063	1.60	2	10	24	9° 28′	3.00	42	25.4	243.8
58	Brass	30 or 31	30	0.0213 or 0.0233	0.541 or 0.592	1	12	50	.....	.....	18-30	40.9 or 48.9	245.4 or 293.4
63	Brass	.....	25	.....	.....	.....	.....	.....	.....	.....	.....	.....	.....
68	Steel	29	30	0.0203	0.516	3	12	14	15° 0′	1.78	6	37.1	187.0
71	Brass	.....	30	.....	.....	3	4½	14½	.....	.....	30	.....	.....
75	Brass	26	16	0.0445	1.13	1	6	49	4° 46′	.....	90	50.7	149.1
82	Steel	29	30	0.0203	0.516	3	13	14	11° 30′	1.78	6	37.1	202.6
83	Brass	30	35	0.0166	0.422	3	.....	.....	.....	1.25	7	33.6	.....
84	Brass	32	40	0.016	0.406	3	12	16	4° 46′	3.00	3½	41.0	472.1
87	Steel	....	24 or 30	.....	.....	1	8	50	18° 26′	.....	.....	.....	.....
(c)	Brass	.....	24	.....	.....	.....	.....	.....	10° 0′	.....	7	.....	.....

(a) This screen is 52 inches long, including the uprights between the panels, and it costs 15 cents per linear foot. (b) 0.062 inches. (c) Caledonia mill.

the diameter of the wire and of the hole for this class of screens. The screen of Mill 53 is noteworthy. This mill has double discharge at the level of the die and requires heavy wire to stand the wear. The heavy wire halves the percentage of opening, but the double discharge restores this, leaving the net gain

that the discharge is at the level of the die with the same amount of opening as single discharge, but with a strong screen.

TABLE 97.—TYLER DOUBLE CRIMPED STEEL OR IRON BATTERY CLOTH.

Abbreviations.—W & M=Washburn & Moen.

Meshes per Linear Inch.	Diameter of Wire.	Diameter of Wire.	Diameter of Hole.	Diameter of Hole.	Ratio of Wire to Hole.	Percentage of Opening.
	W&MGaugeNo	Inches.	Inches.	Mm.		%
12	19	0.041	0.0423	1.07	0.969	25.80
14	20	0.035	0.0364	0.925	0.961	26.01
16	22	0.028	0.0345	0.876	0.812	30.47
18	23	0.025	0.0306	0.777	0.818	30.24
20	24	0.023	0.0270	0.686	0.852	29.16
22	25	0.020	0.0255	0.648	0.786	31.35
24	26	0.018	0.0237	0.602	0.760	32.27
26	27	0.017	0.0215	0.546	0.792	31.13
28	27	0.017	0.0187	0.475	0.908	27.47
30	28	0.016	0.0173	0.439	0.923	27.08
35	30	0.014	0.0146	0.371	0.961	26.00
40	31	0.0125	0.0115	0.292	1.174	21.15
45	32	0.011	0.0112	0.284	0.980	25.49
50	34	0.010	0.0100	0.254	1.000	25.00
55	35	0.0095	0.0087	0.221	1.045	22.79
60	35	0.0095	0.0072	0.183	1.327	18.45
70	37	0.0085	0.0058	0.147	1.468	16.42
80	40	0.007	0.0055	0.140	1.273	19.36

TABLE 98.—TYLER DOUBLE CRIMPED BRASS BATTERY CLOTH.

Abbrevations.—O. E.=Old English.

Meshes per Linear Inch.	Diameter of Wire.	Diameter of Wire.	Diameter of Hole.	Diameter of Hole.	Ratio of Wire to Hole.	Percentage of Opening.
	O.E. Gauge No.	Inches.	Inches.	Mm.		%
12	19	0.040	0.0433	1.10	0.923	27.08
14	20	0.035	0.0364	0.925	0.961	26.01
16	21	0.0315	0.0310	0.787	1.016	24.60
18	22	0.0295	0.0261	0.663	1.132	21.99
20	23	0.027	0.0230	0.584	1.174	21.16
22	24	0.025	0.0205	0.521	1.223	20.24
24	25	0.023	0.0187	0.475	1.233	20.08
30	27	0.01875	0.0146	0.371	1.286	19.13
35	28	0.0155	0.0131	0.333	1.186	20.93
40	30	0.01375	0.0113	0.287	1.222	20.24
50	33	0.01125	0.0088	0.224	1.286	19.14
60	35	0.009	0.0077	0.196	1.175	21.12
70	37	0.0065	0.0073	0.198	0.834	29.73
80	38	0.00575	0.0068	0.173	0.852	29.16

Tables 97 and 98 give the sizes of steel and brass cloth offered by one of the standard makers, and show that the ratio of the thickness of the wire to the diameter of the hole is less where the steel or iron is used than with brass, and consequently the steel or iron screens have a little higher percentage of opening.

§ 151. COMPARISON OF CLOTH AND PUNCHED PLATE SCREENS.—The most noteworthy point from the mills, as shown in Tables 95 and 96, is that the wire cloth screens have a larger percentage of opening than the plate screens. This difference is not so marked in the manufacturers' lists (see Tables 92, 93, 94, 97 and 98). The percentage of opening in fine wire screens is about as large as in coarse, while in fine plate screens it is greatly reduced. In using the former, one saves percentage of opening and sacrifices strength. In the latter, vice versa.

Cloth screens have holes that are approximately square and therefore discharge slightly larger grains than circular holes of the same diameter. The plate screens avoid the tendency to spread seen in wire cloth. Wire screens, owing to their larger percentage of opening, cause less sliming of the ore than the plate screens, because the particles can earlier leave the battery. Again, wire screens are shorter lived and there is therefore less discrepancy between the diameters of the holes in the new and the discarded screens and the pulp will be more uniform than with plate screens.

§ 152. DESIGNATION OF THE SIZES OF HOLES IN STAMP SCREENS.—For plate screens there are four methods, as follows: (*a*) By giving the actual size of the holes in decimals of an inch or in millimeters. This is to be preferred, because it tells the mill man the size of grain the screen will pass.

(*b*) By numbering the screens according to the diameters of sewing needles to which the holes purport to correspond. This is indefinite, because the needle sizes of one firm differ from those of another.[193] The majority of manufacturers, however, have agreed upon the sizes shown in Table 99. In the case of

TABLE 99.—SIZES OF NEEDLES FOR SCREENS.

Needle No.	Thickness of Plate. (a)	Diameter of Hole.	Diameter of Hole.	Needle No.	Thickness of Plate.	Diameter of Hole.	Diameter of Hole.
	Inches.	Inches.	Mm.		Inches.	Inches.	Mm.
1	0.0243	0.058	1.47	7	0.0191	0.024	0.61
2	0.0243	0.049	1.25	8	0.0179	0.022	0.56
3	0.0243	0.042	1.07	9	0.01594	0.020	0.51
4	0.0243	0.035	0.89	10	0.01419	0.018	0.46
5	0.0219	0.029	0.74	11	0.01264	0.0165	0.42
6	0.0201	0.027	0.69	12	0.01264	0.015	0.38

(a) The thickness of the plate is taken from Fraser & Chalmers' catalogue.

a slotted screen the width of the hole is the dimension which designates the size of the hole.

(*c*) By the meshes of sieves which purport to correspond to the sizes of the holes. This method is misleading and should be abandoned, since sieves with the same mesh but with different diameters of wire have different diameters of hole. See (*a*) under designation of cloth screens below. This method is all the more confusing, since some manufacturers use the term mesh to express the fractional size of the hole. Thus 40-mesh means a hole $\frac{1}{40}$ inch in diameter.

(*d*) By various trade numbers. For example, screens made in Central City, Colo.,* are labeled 0, 1, 1½, etc., the size 1½ being about equivalent to 50-mesh brass screen. In the same way tin screens are sold under three numbers, No. 0, No. 1, No. 2. Samples of these measured by the author gave the diameter of the holes as 0.026 inch (0.658 mm.), 0.032 inch (0.814 mm.) and 0.040 inch (1.018 mm.) respectively, and there were 20, 18 and 15 holes per linear inch laid out in 90° rows. The plate was 0.016 inch thick in all three cases.

The designation of sizes for cloth screens is made in three ways:

(*a*) By the number of holes to the linear inch. This, if the size of wire is given in decimals of an inch, defines the actual size of hole, otherwise it is misleading. See Mill 58, Table 96, and diameters of holes in 60- and 70-mesh brass cloth, Table 98. There is another objection that in many cases an actual count of the holes per linear inch will give a different number from that designated.

(*b*) The method commonly adopted abroad is to designate the number of holes in a square centimeter. This is more unsatisfactory than the use of the number of meshes to the linear centimeter; first, because one must extract the square root in order to get the number of holes per linear centimeter; secondly, because after obtaining the number of holes to a linear centimeter, one does not then know the diameter of the hole.

(*c*) In South Africa the number of holes per square inch is given. This is open to the same objections as (*b*).

§ 153. GAUGES for thickness of plate and diameter of wire lead to great confusion. There are no less than eight gauges in the market, viz.: (1) American, or Brown & Sharpe's gauge. (2) Birmingham, or Stubs' wire gauge. (3)

* Private communication from T. A. Rickard.

United States standard gauge for sheet and plate iron and steel. (4) Roebling's, or Washburn & Moen's gauge. (5) Trenton Iron Co's wire gauge. (6) Old English wire gauge. (7) Russia gauge for Russia iron. (8) G. W. Prentiss' gauge.

Fraser & Chalmers, Catalogue 7, 3d edition, pp. 8 and 9, give gauges Nos. 1, 2, 4, 5, 6, 7 and 8. Kent's "Mech. Eng. Pocketbook," p. 28, gives gauges Nos. 1, 2, 3, 4 and 5. Tyler's Catalogue p. 8, gives gauges Nos. 1, 2, 4 and 6.

All of these gauges are arbitrary and their numbers do not express directly the actual diameters of wires and thickness of plate used. The Railway Master Mechanics' Association and the American Steel Manufacturers' Association have both decided to adopt for wire and plate the decimal micrometer gauge,[140] and it would seem to be a proper time for the ore dresser to do the same. In pursuance of this idea, the author has given both inches and millimeters for the net diameters of holes in screens, whenever obtainable.

In conclusion, there seem to be three facts that are all important for the ore dresser to know in deciding upon the kind of screen to use: (*a*) The exact diameter of the hole, controlling the size of his pulp; (*b*) the percentage of opening, showing the freedom of discharge and the strength of the screen; (*c*) the thickness of the plate or wire indicating the strength of the screen.

§ 154. Material and Cost of Screens.—Plate screens are made of Russia sheet iron, steel plate, burned tin plate and unburned tin plate. Besides these, tin bronze, phosphor bronze, aluminum bronze (95% copper and 5% aluminum), and copper, have all been tried. Cloth screens are made of steel wire or brass wire. In addition to these phosphor bronze and aluminum bronze wire have been tried.

(*a*) Iron and steel plate or cloth have advantage of strength and cheapness of first cost, but they are liable to be attacked by acid water. An example[21] of the effect of acid water in shortening the life of Russia sheet-iron buhr-punched plate screens, is shown in Table 100, of five Gilpin County mills, each of which receives the water from the one above. The water acquires acidity in each mill

TABLE 100.—EFFECT OF ACID WATER ON SCREENS.

Mill.	Life of Screens.
	Days.
Hidden Treasure	81
Prize	75
Gregory Bobtail	60
New York	25
Randolph	16

from oxidation of pyrite. The abnormally high drop between the third and fourth mills is due to acid water from a mine entering the creek at that point. Rickard recommends the use of quicklime for neutralizing the acid. At Star of East mill, Ballarat, one-half bucket of quicklime to each battery every two hours, prevents black scum forming on the plate. At Brittania United mill, Ballarat, they use 5 pounds of quicklime to each battery every 24 hours. A very effective way to neutralize the acid would be to run lime water from a tank which was charged with a little fresh slaked lime once or twice a day, into the flume which brings water to the mill, at a point far enough back to thoroughly mix the two liquids. Surface ores often give more trouble from acid water than those that are undecomposed.

(*b*) Tin plate screens rank as low first cost screens (see Mills 69 and 73, § 155). The iron used for making tin plate is of a very high grade. They seem to be preferred over the ordinary untinned or "black" plate, which is of

equally good quality and would save the cost of tinning. The reason of this may be that the tin acts as a rust preventative until the screen is to be used. It is common to burn the tin coating in a forge, mainly to oxide, to prevent amalgamation of its surface. Some mill men consider this difficulty insignificant, and do not burn the tin.

(*c*) Brass cloth has moderate first cost and resists action of acids, but it has not the strength of iron and steel and, therefore, must be made with larger wire. (See Tables 97 and 98). It is said that brass wire screens have less tendency to spread than steel.[21]

Copper plate $\frac{1}{16}$ inch thick is used in one Australian mill. It has long life.[21]

(*d*) Tin bronze, phosphor bronze and aluminum bronze plate and cloth have all been tried. They have long life but very high first cost.

The cost of mill screens per ton of ore crushed is given in Table 101. The great variation shown there in cost of screens per ton is due more to the height of discharge than to the quality of the screen or the ore. This table shows

TABLE 101.—COST OF SCREENS PER TON OF ORE CRUSHED, FROM MILLS VISITED.

Mill No.	Material of Screen.	Cost of Full Screen.	Capacity of 5 Stamps per 24 Hours.	Life of Screen.	Life of Screen.	Cost of Screen per Ton Crushed.
		Dollars.	Tons.	Days.	Tons.	Cents.
56	Iron cloth.....	2.33	30.0	42	1,260	0.185
57	Unburned tin plate.....	0.50	8.0	30	240	0.208
59	Burned tin plate.....	0.625	7.5	15	112.5	0.556
61	Unburned tin plate.....	0.52	15.0	15	225	0.231
64	Russia iron plate.....	1.90	15.5	27½	426	0.445
65	Burned tin plate.....	0.40	17.5	14	245	0.163
67	Russia iron plate.....	2.60	14.35	21	301	0.865
68	Steel cloth.....	1.78	8.75	6	52.5	3.390
72	Russia iron plate.....	1.75	12.5	32	400	0.437
73	Burned tin plate.....	0.40	17.5	14	245	0.163
74	Burned tin plate.....	0.40	17.5	14	245	0.163
77	Russia iron plate.....	1.60	5.7	81	461.7	0.347
82	Steel cloth.....	1.78	11.0	6	66	2.697
83	Brass cloth.....	1.25	10.0	7	70	1.786
84	Brass cloth.....	3.00	12.5	3½	43.75	6.857

that the expense for screens per ton crushed, is so low that the mill man will do well not to strive for too long a life of screen, because he may be losing, in the coarser tailings resulting, several times as much as an earlier change of screens would cost. (See § 155, on aluminum bronze at Homestake mill.)

§ 155. CHOICE OF SCREENS.—In regard to choice of screens, each mill man must study his own problem for himself. In general, he will consider four things: (*a*) High capacity in tonnage; (*b*) high percentage of extraction of free gold on amalgamated plates; (*c*) high percentage of extraction of sulphurets on vanner; (*d*) low cost of running.

The following paragraphs give the results of experience in some mills:

At an Amador County mill unburned tin screens 0.016 inch thick, punched with round holes in rows at 90°, 0.031 inch (0.787 mm.) diameter, having 0.025 inch space between the holes and 24.45% of opening, crushed 21¾ tons per battery in 24 hours; while diagonal slotted screens 0.026 inch thick with holes 0.023 inch (0.584 mm.) wide and 0.25 inch (6.35 mm.) long and with 14.16% of opening, crushed only 7½ tons per battery per 24 hours, all the other conditions remaining the same.

In Mill 86 the heavy diagonal slot screen which proved successful in the Huntington mill (see Table 95), failed in the stamp mill on account of choking, probably due to the thickness of the metal.

Mill 71 uses 30-mesh brass cloth. With this they netted more concentrates on the vanner than with 40-mesh brass cloth. Plates with round and slotted holes were tried and condemned because they discharged too slowly.

Mill 61 found slotted black iron screens gave poorest results. Brass wire screens gave better results. Tin plate, unburned (see Table 95), proved the best both in freedom of discharge and cheapness. The holes do not blind up, and the soft tin protects the iron, as paper does under a sand blast.

Mill 67 found that woven iron wire screens had too short life and rusted badly; that clear slot Russia iron and aluminum bronze plate wore too rapidly, causing coarse crushing; that clear slot brass split; that buhr-slot Russia iron was most satisfactory, as the slots can be closed up when worn and the life thereby increased 150 to 200%; that probably buhr-slot aluminum bronze would be better still.

Mill 69 has adopted No. 0 punched tin instead of 30-mesh woven steel wire, because it is cheaper and it discharges better. The former costs 10 cents per square foot delivered, while the latter costs 34 cents per square foot and the life is not materially different. The former has round holes 0.026 inch (0.658 mm.) diameter and 21.0% of opening, and the latter has square holes 0.0178 inch (0.452 mm.) diameter and 28.5% of opening. The number of holes remaining open after each screen had served its time in the battery (about 10 days) is as follows:

No. 0 Punched Tin Screen.		30-Mesh Steel Wire Screen.	
1st inch above discharge	70% of holes open.	1st inch above discharge	94% of holes open.
2d " " "	69% " "	2d " " "	59% " "
3d " " "	76% " "	3d " " "	66% " "
4th " " "	84% " "	4th " " "	75% " "
5th, 6th, 7th, 8th inches	88% " "	5th, 6th, 7th, 8th inches	90% " "

At the Gover mill, Amador County, Cal.,[21] for medium hard ore with gold of medium fineness, 30-mesh brass cloth is used, and lasts 35 to 55 days. For ores rich in pyrite, 20-mesh steel cloth is used, giving rapid discharge and lasting 20 to 30 days. When the gold is very fine and as usually happens, the ore is very hard, punched Russia iron, No. 7 needle (0.025 inch or 0.635 mm.), is used. This retains the pulp long in the battery and causes fine crushing. Such screens last 40 to 60 days.

At the Golden Star mill, So. Dak.,[21] wire cloth was blinded and broken by chips and the difficulty was overcome by changing to punched plates.

At the Phœnix mill, Otago, New Zealand,[21] plates blinded too rapidly and wire screens were perferred.

Bernard McDonald states that slotted plates for equal diameters of grain were discarded for wire screen, 30 mesh, No. 29 wire, 0.0178-inch (0.452 mm.) hole, with greatly improved results in diminution of slime and increased capacity. The mortar is very narrow, it being 11 inches wide at the dies. It is driven for maximum output and when fed with ¾-inch material, yields 3½ tons per stamp per 24 hours.

The Mammoth mill, of Arizona,[21] increased its stamping capacity 20% by substituting wire screen 24 mesh with No. 26 wire for a diagonal slotted plate screen, producing the same size of grain.

Aluminum bronze screen 0.035 inch thick, lasted six months at the Homestake mill,[40] wearing from No. 7 (0.024 inch or 0.61 mm.) to No. 5½ (0.028 inch or 0.715 mm.) needle without breaking. The diagonal slotted Russia sheet iron screens lasted two weeks under same conditions. The bronze cost 45 cents per pound unperforated.

At another place,[44] aluminum bronze cloth lasted 17 weeks while Russia iron lasted three weeks; and phosphor bronze cloth lasted several times as long as brass cloth.

The screen at Mill 73, when new, measures 0.018 inch thick with buhr on, or 0.013 inch with the buhr filed off. After being worn about 14 days it measures 0.011 inch and although the holes have not visibly enlarged, the screen is discarded, because it is so thin that it begins to tear. This indicates that the faces of the plates wear faster than the sides of the holes. At this mill better results have been obtained with burned tin plate than with round or slotted Russia iron or with wire cloth and at the same time it is much cheaper. Tin plate costs a little less than 12 cents per square foot, while Russia iron costs from 40 to 75 cents per square foot.

§ 156. THE SLOPE OF THE SCREENS varies in the table from vertical to 20° from the vertical; 10° is by far the most common. The vertical screen has hydraulic pressure alone acting to discharge the particles of crushed ore, while a sloping screen adds the force of gravity which increases with the slope. A sloping screen tends to retard the falling grains, thereby hastening discharge. The greater the slope, however, the greater will be the tendency to blind the screen. After a number of tests[129] to obtain the slope of greatest efficiency of

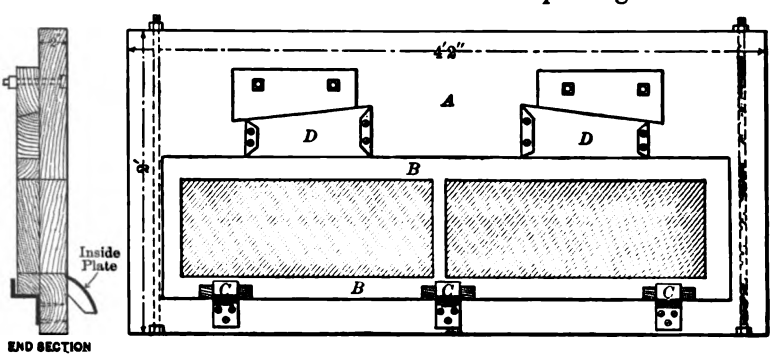

FIG. 121.—FRONT OF MORTAR, SHOWING SCREEN IN PLACE.

discharge, the screen of the Newton mortar (see Figs. 114*a* and 114*b*) was made to slope 12° from the vertical.

§ 157. SCREEN FRAMES.—(See Fig. 112*c*.)—They are made of wood, rarely of iron. The wood, from 1¼ to 2 inches square, is framed and pinned together at the corners. They may be shod with iron plate $\frac{3}{16}$ inch thick at the three or four parts where the keys bear. The frame is often divided by vertical bars ¾ to 2½ inches thick, into panels which range from 2 to 8 in number (see Tables 95 and 96). These support the screen but lessen the area of discharge, (see § 191.) The pieces of screen are tacked to the inner side of the screen frame so as to fill the panels, or to extend continuously behind the uprights, and a strip of sheet rubber, gunny sack, or blanket, is nailed to the screen frame in such manner as to make tight joints against the planed faces of the mortar.

Mill 64 uses a double screen frame (see Fig. 121). The inner or main frame *A* is keyed tight to the mortar, as is usual. The outer frame *B* carries the screen and is attached to the main frame by three iron cleats *C* below and two wooden wedges *D* above. The advantage of this lies in the shortened time of changing screens and the greater freedom of discharge. Both frames have to be removed at the clean up.

The frames may be inverted to even the wear on the screen, and if the top bar is narrower than the bottom, the additional advantage of adjusting the height of discharge will be obtained.

In Mill 68 a graded set of frames is used in which the bottom bars are 5, 3½ and 1¾ inches wide respectively.

As seen in Figs. 111*a*-114*b*, the frame is driven carefully down in the two end grooves to a bearing by a mallet and a long, vertical key wedge is driven in the groove at each end, forcing the end bars of the frame to a tight bearing against the planed faces of the mortar, and one or two horizontal keys are driven at the bottom against lugs, doing the same for the bottom bar. The end wedges have large heads for ease of removal. The bottom wedges can be driven out backward.

At the Homestake (see Figs. 111*a*-111*c*) and Caledonia mills, Mill 67 and Mill 77, a space is left above the screen frame for the removal of chips, rope, grass, etc. This is closed with a board which comes to the frame, or a canvas curtain which laps inside. At Mill 73 in four batteries a little door is made in the end panel at which the chips collect. In the eight other batteries the chips are removed from above the screen. These chips are gathered and burned from time to time and the gold extracted from the ashes. This furnace is 5×8 feet and has cement floor, 15 inches above which are placed the grate bars. The top of the arch is 3 feet above the grate bars. There is a charging hopper at the top, with a door. The ashes are screened to remove nails and then ground in the clean up barrel with 10 pounds of mercury for six hours. By burning all the wood used around the mill they save from 6 ounces to 2 pounds of amalgam per month. In some mills old screens are allowed to rust to pieces under the action of the weather assisted by salt, and a considerable amount of gold is obtained.

§ 158. A Canvas Shield is suspended in front of the screen, or a Splash Board of wood (see Fig. 437) is used to stop the spatter caused by the stamping. In Mills 56, 61, 62, 63, 71 and 76 splash boards are used and all except Mill 63 have amalgamated copper plates upon them. In Mills 56, 61, 62 and 76 the boards are 14, 7, 12 and 8 inches wide respectively. They are all inclined upward and outward so that the attendant can view the screen. At the South Clunes United mill, however, it is inclined downward and outward. Canvas shields are used in Mills 55, 57 and 67. Mills 65, 73 and 74 have a combination wooden splash board and canvas shield. A board ½ inch thick, 12 inches wide and extending the length of the mortar, is suspended vertically from the screen frame by two hooks and eye-bolts so as to swing freely. To the lower edge of the board is tacked a strip of canvas 6 inches wide, which confines the splash to the apron.

TABLE 102.—CHUCK BLOCKS.

Mill No.	Number Used.	Height of Chuck Blocks.
59	.....	1-inch difference.
61	1, in sections.....	1-inch sections.
62	2.....	8 and 6 inches.
64	1, in sections	½-inch difference.
66	2.....	7 and 5 inches.
67	3.....	10, 8 and 6 inches.
71	1, in 5 sections.....	4 of 1½ inches, 1 of 2 inches.
84	3.....	3, 2 and 1 inch.
Oldham[188].	Several..	14 inches, downward.

§ 159. Chuck Block.—This is a block commonly made of two pieces of plank of the forms shown in Figs. 111*a*-114*b*. When used it is put under the screen frame and serves to raise or lower the height of discharge, also to serve as a support for the front inside amalgamated plate. It is generally made in either two or three heights, interchangeable. None are used in Mills 27, 55,

56, 68 and 82. They are used in Mills 59, 62, 63, 64, 65, 67, 71, 72, 73, 74, 75 and 83.

The different heights are shown in Table 102. The high wooden chuck block of Mill 67 and the Oldham mill (see Figs. 113*b* and 113*c*) gives a spring which, though slight, settles the amalgam layer in the sand to 2 inches below the surface of the sand, while an iron chuck block settles it to only 1 inch below the surface. This mortar has a sill only 2 inches above the bottom of the mortar. The same thing would be true in comparing this wooden chuck block with a solid iron front.

The Oldham chuck block is made of wood faced with thin steel plate, and a tight joint between it and the mortar is made with sheet rubber packing. The chuck block of Mill 62 is faced with an iron plate.

At the Gover mill, Amador County, Cal., a curved chuck block (see Fig. 122), gave more rapid discharge of the pulp than a straight chuck block (see Fig. 123).

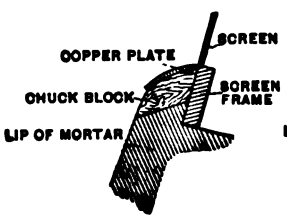

FIG. 122.

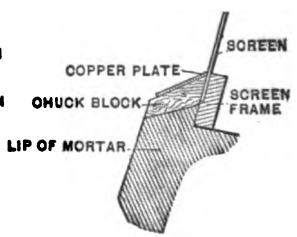

FIG. 123.

FIG. 122.—CURVED CHUCK BLOCK. FIG. 123.—STRAIGHT CHUCK BLOCK.

§ 160. LIP APRON.—This is a cast-iron extension of the lip which may be flanged, faced and bolted to the mortar, as in Fig. 112*b*, or may be cast directly on the mortar. It conveys the pulp from the screen to the amalgamated plates below. The ordinary lip is about 6 inches wide (see Fig. 111*c*) while the lip apron may extend it to a total of 20 inches and at the outer end it may be supplied with a distributing box the full width of the mortar, with holes evenly lined and spaced. It serves for distributing pulp evenly to the plates that are to follow, and also for a holder for the battery cleanings at the clean up. The usual practice in this country is to dispense with the wide lip apron and distributor.

§ 161. INSIDE AMALGAMATED PLATES.—These are generally of soft annealed copper plate $\frac{1}{8}$ inch thick, simply coated with quicksilver, sometimes also silver plated. Amalgam accumulates so rapidly on them, however, that silver plating is not really necessary. They are used to catch gold in the battery, utilizing the impact of the gold particles derived from the swash of the stamp, as a means of obtaining contact of the gold with the plate. If placed too near the stamp, the amalgam is scoured off. Custom favors a single plate in the front of the mortar between *A* and *B*, Fig. 112*b*. A few mills use front and back plates, as in Fig. 114*b*. One mill, Phœnix, Arizona, uses back plate only.[44]

The objections to the use of back plates are: (1) They widen the mortar, and diminish thereby the speed of stamping; (2) they cannot be adjusted easily to suit the height of the die, and (3) they are ordinarily out of sight in the dark, and difficult to care for properly. The E. P. Allis Co. partially overcame these objections by making a mortar with an opening in the recess, for removing the back plate as in Fig. 114*b*.

In the mills visited by the author no inside plates are used in Mills 27, 55, 56, 58, 68, 82, 83, 84 and 87. They were formerly used in Mills 68, 82 and 83, but were condemned, as they gave extra work of cleaning up with no extra catch of gold to compensate; in fact Mills 68 and 82 report a greater extraction when outside plates only are used. Both front and back plates are used in Mills 70, 77, 85 and 88. In Mill 77 they are of plain copper $\frac{3}{16}$ inch thick; the front is 6×54 inches and is vertical; the rear is 12×54 inches and slopes 40°. In Mills

70 and 85 they slope 50° (see Fig. 114*b*) which slope was the result of experiment. In the remainder of the stamp mills, front plates only are used on the chuck block. The details of some of these are given in Table 103.

TABLE 103.—INSIDE PLATES.

Mill No.	Length of Plate.	Width of Plate.	Thickness of Plate.	Plain Copper or Silver Plated.
	Inches.	Inches.	Inches.	
(*) 57	52	4⅛	.....	Silver plated.
59	48	3	.....	.....
61	50	4⅛	.....	.....
62	46	5	⅛	Plain copper.
64	48	5	.....	Plain copper.
(†) 67	48	2	⅛	Plain copper.
72	48	6	.....	.....
73	48	8	⅛	Plain copper.
74	48	8	⅛	Plain copper.
76	48	5⅛	.....	.....

The plates are curved to suit the chuck block in Mills 61, 62, 64, 72 and 76. They are plane surfaces in Mill 59, to avoid scouring. They slope 45° in Mill 57.* In Mill 67† the upper 1½ inches of the width is on the chuck block, and slopes 45° upward and outward. The lower ½ inch is bent at right angles to form a 90° gutter which makes an efficient catcher of amalgam. Mills 73 and 74 have the upper half of the plate sloping 45°, while the lower half is vertical. Below the lower edge of the plate and lapping over ¼ inch on the plate is a ½×2-inch horizontal iron strip bolted to the chuck block. At the bend in the copper, or about 2 inches above the bottom iron, is bolted a second strip ½×⅛ inch. These strips protect the plate from scouring and increase the catch of amalgam. It is natural that the currents should more perfectly follow a curved surface than a sharply bent angle, such as is needed with a flat plate. The back plates are generally flat and are placed in a special recess under the feed chute, and are held in place by bolts or wedges (see Fig. 114*b*).

For further details on amalgamation and the care of plates, the reader is referred to Chapter XVII. on amalgamation.

FIG. 124. FIG. 125.

FIG. 124.—DIE WITH LUGS. FIG. 125.—DIE WITH FOOT PLATE.

§ 162. DIES.—These are the wearing parts upon which the rock is crushed by the falling stamp. They lie in the bottom of the mortar and relieve it from the wear due to crushing.

Dies are made cylindrical with axes vertical. They are held in place either by a cylindrical socket in the bottom of the mortar, by lugs cast upon the dies (see Fig. 124), which, when turned 90° under flanges on the sides of the mortar, lock the dies in place (used more particularly in dry crushing), or most commonly of all, by having square flanges or foot plates as in Fig. 125, cast upon the bottom of cylinders which are large enough to practically fill the whole space of the bottom of the mortar, and, therefore, line up the dies. Hexagonal dies with sand packed around them, are used at South Clunes.[21] Dimensions of various dies are given in Tables 104 and 107.

Mill 77 uses cylindrical dies sitting in circular sockets with tailings packed around them. All the other mills visited use the square base with corners left off for ease of removing the dies with a bar. New dies are 3 to 7½ inches high

* Fig. 112*b*. † Fig. 113*c*.

and when worn are ½ to 4 inches high. The dies are 8 to 9½ inches in diameter. In New Zealand, one mill is given at 10 inches, in Australia, one at 10½ inches. They range from 47 to 160 pounds weight when new, and from 17 to 50 pounds weight when worn out. The materials cost from 2½ to 11 cents per pound, and are of gray to mottled [233] iron chilled, of white iron chilled, unchilled cast iron, wrought iron, high manganese cast iron, cast steel, forged steel, chrome steel and manganese steel. Cast iron is chilled only above the foot plate.

Further details will be given in § 165, where shoes and dies are discussed together.

TABLE 104.—DETAILS OF DIES.

Mill No.	Space between Dies.	Space between Dies and End of Mortar.	Foot Plates.			Crack between Foot Plates.	Diameter of Die.
			Length.	Width.	Thickness.		
	Inches.	Inches.	Inches.	Inches.	Inches.	Inches.	Inches.
27	1⅛	2	.....	.....	.....	0	8½
55	1	1	.....	.....	.....	¼	8½
56	1½	2	.....	.....	.....	½	8
57	¾	.....	10	10	1¼	½	9
61	¾ to 1	.....	.....	.....	.....	0	9
62	¾	¾ to 1¼	9	10½	1½	¼	8½
64	1	1	.....	.....	.....	½	9
73	.....	.....	9	.....	.....	.....	8
77	1	1½	.....	.....	.....	.....	8
82	1	2	.....	.....	.....	½	8½
84	1	¾	9¾	10	1¼	¾	9½
87	2	3	.....	.....	.....	0	8½
Homestake	2½	1½	10	10½	1¼	½	8
North Star	¾	¾	.....	.....	.....	1¼	9
Oldham	1½	½	9½	10½	1¼	½	8½
Caledonia	.....	.....	9½	10	1¼	.....	8
Lincoln	.....	.....	9¾	11¾	.....	.....	8½

§ 163. False Bottoms may be used to raise the dies when the latter are partly worn to compensate for the wear and to lengthen the life of the die, and also to protect the mortar. The practice of the mills is as follows: None are used in Mills 27, 55, 56, 58, 59, 60, 61, 62, 67, 68, 76, 77, 82, 87 and 88. Mills 65, 73 and 74 use them simply to protect the mortar and keep them in all the time. At Mill 74 a false bottom consists of five cast-iron blocks. Mill 59 formerly used old dies to block up half worn dies. Mill 57 has false bottoms of cast iron 2 inches thick in two pieces in each mortar. They are put in when the die has worn 2 inches and add 10 days to the life of the dies. They break oftener than individual blocks. Mill 64 uses false bottoms made up of three pieces, each 16 inches long, 12 inches wide and 3 inches thick. They are still good after six years. Mill 66 uses false bottoms of cast steel 2½ inches thick. Mill 84 uses false bottoms consisting of one piece for a mortar. It is 51 inches long, 10½ inches wide and 3½ inches thick. It lasts 12 months.

FIG. 126. SHOE.

At South Spring Hill mine, Amador County, Cal., a 3-inch steel false bottom is used all in one piece.[21] At the Phœnix mill, bars 3 inches square are used with sand packed around them.[21] At South Clunes, Victoria, sand is used until the layer is 2 inches thick. Then a false bottom is put in which consists of three castings, two end ones for two dies each, and a middle one for the middle die.[21] This use of sand is common in Australia. Hardman points out that it is unusual to bed dies upon tailings in America, since, in that case, the dies being not on a solid foundation, do not receive a solid blow, cannot be depended upon to remain at uniform height, and their bottoms wear fast and eventually become rounded.

The Father de Smet mill condemned false bottoms, because they cut down

the capacity of the mill.[35] Since the effect of the blow of a stamp is largely dependent upon the solidity of the die, the false bottoms probably diminish the capacity of the stamps, and it is questionable whether this loss is not greater than the gain by using them.

THE STAMPS.—(See Fig. 90.)—Each consists of a stamp stem or rod, a tappet by which it is lifted, a shoe to strike the blow, and a boss or stamp head to connect the shoe to the stem and to give added weight.

§ 164. THE SHOE (see Fig. 126), as now universally adopted, consists of a cylinder or butt, surmounted by a truncated cone or shank. The diameter of the butt is generally the same as that of the die, and ranges from 8 to 9½ inches. In Australia they reach 9¾ inches. The author notes exceptions to the above statement, given in Table 105. Loring[50] reports that at Mills 65, 73 and 74,

TABLE 105.—DIAMETERS OF SHOES AND DIES.

Mill No.	Diameter of Shoe.	Diameter of Die.	Authority.
	Inches.	Inches.	
66	8⅛	9	Author.
77	8	Slightly larger.	Author.
84	9	9⅛	Author.
Newton	8⅛	9	F. T. Snyder[130].
Wentworth Gold Fields Co.	8½	7⅛	F. M. Drake[130].
Saxon Mill, Thames District, N. Z.	9½	10	T. A. Rickard[21].

he has obtained better results with an 8½-inch shoe and an 8¾-inch die than with shoe and die both 8½ inches. The reason is that there is always more or less play in the stamp stem guides and, consequently, where the shoe and die are of the same diameter, the shoe may overhang the die and the whole crushing surface is not utilized. A greater difference in diameter, however, than ¼ inch will cause "cupping" and consequent loss of efficiency.

The butt of the shoe ranges from 5½ to 10 inches high when new and from ¼ to 2 inches high when worn out. The weights range from 85 to 198 pounds new, and from 20 to 56 pounds when worn out. The details of the shanks of various shoes are given in Table 106.

TABLE 106.—SHOE SHANKS AND BUTTS.

Mill or Manufacturer.	Diameter of Butt.	Height of Butt.	Height of Shank.	Diameter of Lower Base of Shank.	Diameter of Upper Base of Shank.	Taper of Shank per Foot.	Ratio of Diameter of Butt to Diameter of Lower Base.
	Inches.	Inches.	Inches.	Inches.	Inches.	Inches.	
Oldham Mill	8⅛	8	5	4⅛	3⅛	2.4	1.88
Homestake Mill	8½	10	5½	4½	3½	2.73	1.79
Father de Smet Mill	8½	6	3½	4½	3¾	2.57	1.88
Providence Mill	8½	7	5	.....	.....	.....	.....
Mill 57	9	9	6	6	4⅛	3.5	1.50
Mill 62	8⅛	8½	5	4½	3¾	1.65	1.88
Mill 67	8½	8	5	4½	3½	2.4	1.88
Mill 73 (a)	8	9	5	4½	3½	2.4	1.78
Mill 84	9	8	5	4½	4½	1.2	1.89
E. P. Allis Co.	.....	.....	5	4½	3¾	2.4	.....
Fraser & Chalmers	8⅛	7	5¼	4¼	3½	1.71	2.00

(a) Loring reports that manganese steel shoes in this mill were cast with a 2⅛-inch hole 3⅛ inches deep in the shank, which made a saving of about 3 pounds of metal or 25 cents plus the freight.

The rounding of the junction between the shank and the butt is to prevent fracture at that point and also to prevent contact between the butt and the boss. Some manufacturers consider the rounding unnecessary and omit it.

In regard to the taper or the angle of the shank, the more acute this angle the stronger will be the joint between the boss and the shoe, but the greater is the tendency to split the boss and bottom the hole, and if it bottoms, it fails to get the full benefit of the wooden wedges.

Shoes are made of chilled cast iron, unchilled cast iron, high manganese cast iron, chrome steel, cast steel, Wilson's pressed steel, fagot iron, manganese steel. For cast steel, that with 0.5% carbon is best.[19] If of chilled cast iron, the butt should be cast in heavy chills, the shank cast in sand. This gives hardness to the butt and toughness to the shanks.[19]

The shoe should not be allowed to wear so thin as to permit undue wear on the boss. The practice is shown in Table 107.

TABLE 107.—STAMP SHOES AND DIES.

Abbreviations.—B. Chr. S.=Bessemer chrome steel; Cts.=cents; G. M. Ch. I.=Gray to mottled chilled iron; H. M. C. I.=High manganese cast iron; In.=inches; Lbs.=pounds; M. C. I. & S.=Mixed cast iron and steel; M. F. S.=Midvale forge steel; U. H. C. I.=Unchilled hard cast iron; Wh. Ch. I.=White chilled iron; Wh. C. I.=White cast iron; Wil. P. S.=Wilson pressed steel.

Mill No.	Shoe or Die.	Material.	New.				Worn Out.			Life.		Net Cost per Ton Crushed	Net Wear of Iron per Ton Crushed.
			Weight.	Height. (a)	Diameter.	Cost per Pound.	Weight.	Height (a)	Sell per Pound.				
			Lbs.	In.	In.	Cts.	Lbs.	Inches.	Cts.	Tons.	Days.	Cents.	Pounds.
27	Shoe..	Chrome steel	125	6½	8½	6	20	½	0	364	182	2.06	0.288
	Die ...	Chilled iron..	125	7½	8½	.....	40	3½	0	112	56	.....	0.759
55	Shoe..	Chrome steel	130	6	8½	6	25	½	0	480	120	1.62	0.219
	Die ...	Cast iron.....	90	6½	8½	3	45	3	0	240	60	1.12	0.187
56	Shoe..	Wil P. S	135	8	8	6	20	½–¾	2	900	150	0.855	0.127
	Die ...	Chilled iron..	100	7	8	4	20	1½–2	1½	600	100	0.616	0.133
57	Shoe..	Cast steel....	155	9	9	6	38	½–¾	1½	288	180	3.03	0.406
	Die ...	Cast iron.....	100	5½	9	3¾	40	2	1½	128	80	2.46	0.469
58	Shoe..	Chilled iron..	175	.....	8½	3½	.....	.....	1	300	150	.....	.....
	Die ...	Chilled iron..	130	.....	.....	3½	.....	.....	1	300	150	.....	.....
59	Shoe..	Chrome steel	180	.....	9	6	45	.....	1½	225	150	4.5	0.6
	Die ...	Chilled iron..	110	.....	.....	3¾	40	.....	1½	90	60	3.916	0.777
60	Shoe..	Chilled iron..	156	.....	8½	.....	.....	.....	.....	.....	.....	.....	.....
	Die ...	Chilled iron..	.....	.....	.....	.....	.....	.....	.....	.....	.....	.....	.....
61	Shoe..	Chrome steel	153	7½	9	8½	40	¼	1¼	314	93–140	3.90	0.359
	Die ...	U. H. C. I....	111	5	9	4 4/10	35	1½	1¼	221.5	60–97	2.00	0.343
62	Shoe..	Forged steel.	159	8½	8½	6½	50	.....	0	180–200	90–150	5.17–5.74	0.545–0.606
	Die ...	Forged steel.	120	7	8½	6½	30	.....	0	180–200	90–150	3.90–4.33	0.450–0.500
63	Shoe..	Chilled iron..	150	.....	8½	.....	50	.....	.....	120	60	.....	0.833
	Die ...	Chilled iron..	100	.....	.....	.....	30	.....	.....	120	60	.....	0.583
64	Shoe..	Chilled iron..	170	9½	9	3½	50	1	2	232.5	75	2.13	0.456
	Die ...	Chilled iron..	135	7½	9	3½	30	1	2	279	90	1.46	0.376
65	Shoe..	Chrome steel	.....	.....	8	(b) 6	.....	.....	.....	.....	.....	.....	.....
	Die ...	White iron...	.....	.....	.....	4¾	.....	.....	.....	.....	.....	.....	.....
66	Shoe..	Chilled iron..	140	8	8½	.....	40	2	.....	270	60	.....	0.370
	Die ...	G. M. Ch. I...	121	6¼	9	.....	30	2¼–2¾	.....	189	42	.....	0.480
67	Shoe..	H. M. C. I....	128	8	8½	c 2.35	35	¾	6/10	126	51	2.37	0.738
	Die ...	H. M. C. I....	110	6¼	8½	c 2.35	40	1½	6/10	125–162.5	50	1.54–2.00	0.560–0.430
68	Shoe..	B. Chr. S.....	130	7	8½	7½	35	½–2	½	157	90	6.10	0.605
	Die ...	B. Chr. S.....	120	7	8½	7½	30–40	3–4	½	245	140	3.59–3.61	0.327–0.367
70	Shoe..	Chilled iron..	.....	.....	8½	.....	.....	.....	.....	.....	.....	.....	.....
	Die ...	Chilled iron..	.....	.....	.....	.....	.....	.....	.....	.....	.....	.....	.....
71	Shoe..	Chilled iron..	150	.....	8½	d 3½	50	.....	2	146.4	61	2.90	0.683
	Die ...	Chilled iron..	90	4	.....	3½	30	1½	2	146.4	61	1.74	0.409
72	Shoe {	Chilled iron..	.....	.....	8½	3½	.....	.....	.....	175–210	70–84	.....	.....
	Shoe {	Chrome steel	.....	.....	8½	6	.....	.....	.....				
	Die ...	Chilled iron..	Irregular wear.										
73	Shoe..	Chrome steel.	160	.....	8	(b) 6	.....	.....	.....	700	200	.....	.....
	Die ...	White iron...	100	.....	.....	4¾	.....	.....	.....	210	60	.....	.....
74	Shoe..	Chrome steel	.....	.....	8½	(b) 6	.....	.....	.....	.....	.....	.....	.....
	Die ...	White iron...	.....	.....	.....	4¾	.....	.....	.....	.....	.....	.....	.....
75	Shoe..	Wh. C. I.....	162	9½	8½	3½	50	1½	2	352.5	94	1.32	0.318
	Die (e)	Wh. C. I.....	112	6	8½	3½	50	1½	2	352.5	94	0.828	0.176
76	Shoe..	Chilled iron..	160	10	8½	7	30–40	¾–1	1	400	160	2.70–2.72	0.300–0.325
	Die ...	M. C. I. & S..	100	7	8½	3½	30	½–2	1	225	90	1.42	0.311
77	Shoe..	Chilled iron..	85	5½	8	3½	26	1 –1¼	½	84	75	3.39	0.702
	Die ...	Chilled iron..	47	3½	(f)	3½	17	1½–2	½	105	91	1.48	0.285
82	Shoe..	Chrome steel.	120	7	8½	7½	35	1	½	171	95	5.16	0.498
	Die ...	Chrome steel.	120	7	8½	7½	40	4	½	252	140	3.49	0.317

TABLE 107.—*Continued.*

Mill No.	Shoe or Die.	Material.	New. Weight.	New. Height. (a)	New. Diameter.	New. Cost per Pound.	Worn Out. Weight.	Worn Out. Height. (a)	Worn Out. Sell per Pound.	Life.		Net Cost per Ton Crushed	Net Wear of Iron per Ton Crushed.
			Lbs.	In.	In.	Cts.	Lbs.	Inches.	Cts.	Tons.	Days.	Cents.	Pounds.
83	Shoe..	Chilled iron..	150	6	8½	5	50	2	.....	84	42	.....	1.190
	Die ...	Chilled iron..	100	4	8½	5	30	2	.....	84	42	.....	0.833
84	Shoe..	M. F. S.....	175	8	9	6½	35	½	.....	227.5	91	.....	0.615
	Die ...	Chilled iron..	100	7	9½	3½	30	2	.....	157.5	54	.....	0.444
87	Shoe..	Chilled iron *g*	.....	8	8½	.....	.....	2	.....	.....	.....	.....	.....
	Die ...	Chilled iron *g*	.....	.....	.....	.....	.....	.....	.....	.....	.....	.....	.....
88	Shoe..	Chilled iron..	.....	.....	.....	.....	.....	.....	.....	.....	.....	.....	.....
	Die ...	Chilled iron..	.....	.....	.....	.....	.....	.....	.....	.....	.....	.....	.....
h	Shoe..	.....	.....	8	8½	.....	.....	.....	.....	.....	.....	.....	.....
	Die ...	.....	.....	6¼	8½	.....	.....	.....	.....	.....	.....	.....	.....
i	Shoe..	Steel	159	.....	.....	9	38	.....	1½	260	130	5.27	0.465
	Die ...	Cast iron	100	.....	.....	.....	40–45	.....	.....	160	80	2.42	0.359
j	Shoe..	Chrome steel.	152	8	9	6	48	.....	1½	229	143	3.71	0.456
	Die ...	Cast iron	93	5	9	4½	45	.....	1½	88	55	3.99	0.544
k	Shoe	Steel	.....	.....	.....	11	.....	.....	.....	.....	90	.....	.....
		Chilled iron..	125	7	8½	4½	.....	.....	.....	.....	30–35	.....	.....
	Die ...	Chilled iron..	95	5½	8½	.....	.....	.....	.....	.....	45–65	.....	.....
l	Shoe..	Chilled iron..	140	.....	.....	.....	.....	1	.....	300	90	.....	0.350
	Die ...	Wh. Ch. I....	160	7	8	.....	38	3½	.....	300	90	.....	0.400
m	Shoe..	.....	124	6	8½	.....	.....	.....	.....	.....	.....	.....	.....
	Die ...	.....	89	5½	8½	.....	.....	.....	.....	.....	.....	.....	.....
n	Shoe..	Chilled iron..	.....	10	9½	.....	.....	.....	.....	.....	.....	.....	0.906
	Die ...	Unchill'd iron	.....	4	10	.....	.....	.....	.....	.....	.....	.....	0.467
o	Shoe..	Cast iron.....	198	10	9¾	.....	.....	.....	.....	.....	.....	.....	1.020
	Die ...	Wrought iron	152	5	.....	.....	.....	.....	.....	.....	.....	.....	0.412
p	Shoe..	.....	.....	.....	.....	.....	.....	.....	.....	.....	.....	.....	.....
	Die ...	.....	.....	4	10½	.....	.....	.....	.....	.....	.....	.....	.....
q	Shoe..	Cast iron	192	9	.....	.....	.....	.....	.....	.....	.....	.....	1.190
	Die ...	Wrought iron	80	3½	.....	.....	.....	.....	.....	.....	.....	.....	0.294

(*a*) The height of a shoe does not include the shank; that of a die includes the foot plate. (*b*) Plus two cents freight. (*c*) Plus 0.15 cent freight. (*d*) Delivered. (*e*) Steel wears 2½ to 3 times as long as iron. (*f*) Slightly over 8 inches. (*g*) A large part of the castings now used are furnished by the Brooklyn Chrome Steel Works. (*h*) Oldham. (*i*) North Star (Abadie). (*j*) North Star (Rickard). (*k*) Providence. (*l*) Caledonia. (*m*) Father de Smet. (*n*) Thames (New Zealand). (*o*) Fortuna (Australia). (*p*) Catherine (Australia). (*q*) Pearl (Australia)

Table 108, taken from Rickard,[21] shows the wear of shoes and dies in different districts, as affected by different conditions.

TABLE 108.—STAMP SHOES AND DIES. (From Rickard.)

District.	Shoe or Die.	Material.	New. Weight	New. Cost per Pound.	Worn Out. Weight	Worn Out. Sells for per Pound.	Life.	Cost per Ton Crushed.	Wear of Iron per Ton Crushed.
			Pounds	Cents.	Pounds	Cents.	Tons.	Cents.	Pounds.
Gilpin County, Colo..	Shoe...	Cast iron.....	83	4	27	1	80	3.82	0.700
		Chrome steel....	111	8	31	0	202	4.39	0.396
(*a*)	Die	Cast iron.....	48	4	26	1	78	2.13	0.282
		Chrome steel....	55	8	25	0	159	2.76	0.188
Grass Valley, Cal. (*b*)	Shoe.....	Chrome steel....	152	9	48	1½	251	5.17	0.414
	Die	Cast iron.....	93	4½	45	1½	96½	3.63	0.497
Angel's Camp, Cal..	Shoe.....	Chrome steel....	175	9	40	0	585	2.70	0.230
(*c*)	Die	Cast iron.....	95	4½	35	1½	275	1.36	0.214
Mammoth, Arizona..	Shoe.....	Chrome steel....	132	11	40	0	190	7.64	0.484
(*d*)	Die	Chrome steel....	120	11	37	0	240	5.50	0.346
Bendigo, Victoria (*e*)	Shoe.....	Cast iron.....	180	2½	38	¾	115	3.66	1.230
	Die	Wrought iron....	98	2½	26	½	335	0.71	0.215
Clunes, Victoria (*f*)..	Shoe.....	Cast iron.....	196	2¾	56	¾	105	4.67	1.320
	Die	Wrought iron....	138	2¾	30	½	420	0.88	2.570
Thames, New Zealand	Shoe.....	Cast iron.....	170	3	51	1	135½	3.40	0.878
(*g*)	Die	Cast iron.....	108	3	42	1	141	3.25	0.468
Harrietville, Victoria	Shoe.....	Fagot iron.....	172	3½	38	0	185	3.25	0.724
(*h*)	Die	Fagot iron.....	84	3½	37	0	200	1.47	0.235

(*a*) No breaker, no feeder. Ore moderately soft. Long drop. Variable wear. (*b*) Rock breaker and feeder used. Ore very hard. (*c*) Rock breaker and feeder used. Ore soft. Short drop. (*d*) Rock breaker and feeder used. Ore medium hard. (*e*) No breaker or feeder. Ore medium hard. (*f*) Feeder used, no breaker. Ore is quartz ore. (*g*) Feeder used, no breaker. Irregular wear. (*h*) No breaker or feeder. Ore is variable.

§ 165. LIFE OF SHOES AND DIES.—These parts diminish by the cutting action of hard rock and by the breaking off of their edges. The hardness of the metal resists the first, toughness resists the second. Uniformity of structure is desirable for resistance to either loss. It follows that the metal must be hard, tough and of uniform structure.

The shoes wear faster than the dies; with California short drop 1.2 to 1.8 times as fast, using the same material for both; with Colorado high drop 2.5 times as fast. The reason of this probably is that in transmitting the force of the blow from the shoe to the die through the rock, energy is absorbed in fracturing the rock, which is shattered before it can transmit the force, and to a certain extent it cushions the blow. This action is emphasized by the fact that the die is usually protected with a layer of rock slightly thicker than that for maximum capacity, in order to prevent the dies from breaking. The life of shoes and dies is increased by mechanical feeders and by preliminary reduction with rock breakers, as is shown in Table 108.

The shoes and dies wear to uneven surfaces, but, owing to the revolution of the stamp, the unevenness generally has a certain regularity around the circle as if the two surfaces were turned in a lathe. Sometimes the shoe wears convex hemispherical and the die concave to fit it, but perhaps the most common wear is for the shoe to be concave in the center and convex annular around the edges, while the die is the reverse (see Fig. 127). At the Homestake mill, shoes wear more evenly than dies.[40]

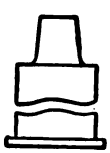

FIG. 127.—WORN SHOE AND DIE.

Tables 107 and 108 show the results obtained in different mills on various materials for shoes and dies, together with the computed net cost and net wear of iron per ton crushed, which form the proper basis of comparison. They show that chilled iron has the advantage of cheapness of first cost, and if a foundry is near by, the further advantage of low freight charges and a market for worn-out parts. It has shorter life than the steels. The various steels, of which forged steel is perhaps the best, add toughness to hardness and last two to three times as long as chilled iron, and therefore, require less frequent adjustment of drop. In places remote from a foundry where chilled iron would have to pay freight, steel has a great advantage. Steel is said to wear to less even surfaces than chilled iron. Thus Mill 69 reports that steel dies cup badly.

In addition to the data given in the tables, Mill 73 reports that for shoes weighing 160 pounds white iron lasts 45 days, while chrome steel lasts 200 days. For dies weighing 100 pounds, white iron lasts 60 days while chrome steel lasts 90 days. White iron costs 4¾ cents per pound and chrome steel costs 8 cents per pound. The white iron shoes not only cost more per ton, but they necessitated a much more frequent setting of the tappets. Ferroaluminum shoes were tried and found to crack. According to Loring[50] manganese steel shoes, which are now used in Mill 73, last 296 days. They are 10 inches high, 8½ inches in diameter and weigh 177 pounds each when new and 28 pounds when worn out. They cost about 8 cents per pound plus the freight. He also reports the life of hard iron dies as 120 days. They weigh 84 pounds each when new and 41 pounds when worn out. They cost 4½ cents per pound delivered and the old dies sell for 1½ cents per pound. These figures given by Loring are with stamps 9¼ inches apart center to center, with dies ¼ inch larger than the shoes and with linings in the mortar, while those obtained by the author are with stamps 10 inches apart center to center, with dies of the same diameter as the shoes and with no linings.

Mill 67 reports that steel shoes cost 6 cents per pound and last twice as long as chilled iron. Manganese steel was tried for dies and found to splinter. Pitts-

burg cast steel lasts longer than chrome steel or high manganese iron, but it costs 10 cents per pound, while the iron costs 2½ cents per pound. The high manganese iron is made from a mixture of special manganese iron and foundry pig, and is very tough and durable.

Mill 77 reports that chilled cast iron has always proved itself most economical for shoes, dies and heads for the slow drop stamps, but on quick drop stamps which have been recently added, manganese, chrome, and the Midvale Co.'s projectile steel have all proved better than chilled cast iron.

Mills 68 and 82 use besides chrome steel, various makes of forged steel, such as Bessemer, English, Wilson, etc. Iron dies are preferred in connection with steel shoes.

For ease of managing and rapidity of crushing, it is well to have shoes and dies wear out together, because the surfaces are then always mated. The more rapid wear of the shoe may be counteracted by the use of long life, hard steel shoes, mated with the chilled iron dies, or chilled iron shoes mated with cast-iron dies, etc. An approximate balancing of the lives of the two may thus be made. In addition, this combination of hard shoes and tough dies, is said to give flatter surfaces and, therefore, higher capacity of the stamp. The lives may also be balanced by varying their vertical dimensions.

It is important that not only should the shoe and die wear out together as a pair, but also that all the dies should be nearly if not quite, the same height in the same battery, to maintain the same depth of rock on their surfaces and the same height of discharge. For this reason, in case a die breaks between clean ups a partly worn die of the same height as the others should be put in to take its place. A stock of partly worn dies may be kept on hand for this purpose. In case there are no old ones on hand, a complete set of new dies should be put in. The same procedure is to be recommended for shoes, although it is not so important as with dies. The practice of a few mills is as follows:

Mills 61, 62, 64, 67, 68, 82, 84 and 87 replace a broken, half-worn shoe or die by another of the same size from the stock of partly worn shoes and dies. Mills 27, 65, 73 and 74 keep their dies even by the above method, but are not so particular about their shoes. Mill 77 puts in a new shoe or die. It may be further remarked in regard to Mill 67 that shoes never broke until they were worn down to 2 inches high and the dies never broke at all. In Mills 61 and 67 one battery is kept at work wearing out old shoes and dies.

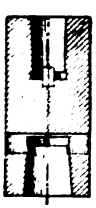

FIG. 128. SECTION OF BOSS.

Where mortars are cleaned out once a fortnight the shoes and dies are not apt to be changed between clean ups, unless there is a break. At the clean up, if a set of shoes and dies are so worn that they will not last till the next clean up, they are replaced by a set of new shoes and dies. In some mills, for example, 68, 77, 82 and 83, the mortars are only cleaned up when the shoes and dies are worn out.

§ 166. THE BOSS OR STAMP HEAD (see Fig. 128) is cylindrical of the diameter of the shoe and of varying lengths (18 inches is common). It serves to connect the stem or stamp rod with the shoes and also to bring up the weight to the total called for. It has a socket below to suit the shank of the shoe, and above, for the taper of the stem. These sockets are sometimes connected by a small hole through the center of the boss. There are two horizontal keyways, generally at right angles, into which wedges may be driven for removing the shoe and the stem.

The boss is made of a tough cast iron, or less frequently of steel. Sometimes a wrought iron ring is shrunk on the top or bottom, or both, to prevent splitting, the boss being cut away to receive them (see Fig. 129). If the rings are too thick, they are a source of weakness rather than strength. When bottom rings are

used, they should be set ⅛ to ¼ inch up from the bottom of the boss, to guard them in case a shoe comes off, and prevent them from being loosened by the battering which follows. A loosened hoop is worse than none at all. The use of rings is now going out of practice except for dry crushing. From Table 109 we see 10 mills out of 13 use no rings, two mills have rings on top only and one mill has rings on the bottom only.

The upper socket is bored, the lower is left rough. The joint between the boss and the shoe is made by tying on a set of staves around the shank of the shoe (see Fig. 130). These are ⅜ to ¾ inch thick, and are shaped to cover the

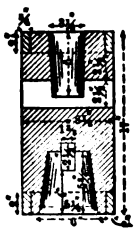

FIG. 129.—SECTION OF BOSS WITH RINGS.

FIG. 130.—STAVES ON SHOE SHANK.

slope surface of the shank. They are made of sawed, dry pine, which swells much with water. A plan for saving time at the clean up, is to wrap a strip of canvas around a shoe shank and tack the staves to this. The points of the tacks striking the shoe shank, turn up, clinch and hold canvas and staves together. These so-called bracelets or collars, are readily slipped off the shank of the shoe and kept in stock. In dry crushing, staves of wrought iron are often used instead of wood. Bosses wear around the bottom, due to the scour of the sand and water, especially when the shoe is nearly worn out. The sockets may also gradually become enlarged. In this weakened condition the boss breaks or splits. The final break may be hastened by an accident, such as a shoe falling off, a shoe pounding on a naked die, or a shoe breaking and its neck being driven up into the head.

Table 109 shows the details of the bosses, as obtained from the mills.

TABLE 109.—DETAILS OF BOSSES.

Mill No.	Material.	Weight.	Diameter	Length.	Cost. (*a*)	Life.	Rings.
		Pounds.	Inches.	Inches.	Dollars.	Years.	
27	Cast iron	215	8½	18	.....	.....	On top only.
55	Chrome steel	250	8½	18	20.00	5	None.
56	Cast iron	160	8	14	7.20	.....	None.
57	Cast iron	220	.....	.....	.....	10	None.
58	.....	175	.....	.....	.....	15	.....
59	.....	200	.....	.....	11.00	5	.....
61	Cast steel	245	.....	.....	23.75	Over 5	.....
62	Cast steel	290	8½ to 8¾	22	14.50	.....	None.
64	Iron or steel	200 to 210	.....	18	(*b*)Iron 10.00	6	On top only.
66	Cast iron	240	.....	18	.....	5	None.
67	High manganese iron	300	8½	18	7.50	(*c*)	None.
68	Cast iron	240	8½	19	8.19	(*d*) 2	None.
73	.....	200	(*e*)8 at top	18	.....	.....	(*f*)
75	.....	180	.....	.....	9.00	8 to 10	.....
76	Cast iron	180	8	22	.....	(*d*) 20	.....
77	Cast iron	280	8	18	11.20	3	.....
82	Cast iron	240	8½	19	8.19	(*d*) 2	None.
83	.....	200	.....	.....	10.00	1 to 1¼	.....
[illegible]	.....	238	9	18	9.52	2	None.
[illegible]	.....	.....	.....	.....	.....	.....	None.

[illegible]alue of worn-out bosses may be gained by reference to Table 107 of Shoes and Dies. (*b*) [illegible]wo out of 30 split in 5 years. (*d*) If no accidents occur. (*e*) 7½ inches at the bottom.

TABLE 110.—SOCKETS IN BOSSES.

Mill or Manufacturer.	Stem Sockets.				Shoe Sockets.				Length of Boss.	Diameter of Boss.
	Depth.	Large Diameter.	Small Diameter.	Taper per Foot.	Depth.	Large Diameter.	Small Diameter.	Taper per Foot.		
	Inches.	Inches.	Inches.	Inches.	Inches.	Inches.	Inches.	Inches.	Inches.	Inches.
Mill 73	7½	.....	2⅞	.....	6	5	3¾	2.5	18	(a) 8 at top
Oldham Mill	6⅞	3¼	3	0.44	5	4¾	3⅞	2.1	18	8½
E. P. Allis Co.	6	3⅞	2¾	0.75	5½	5¼	4¼	2.18	17 to 18	8½
Fraser & Chalmers	5½	3¼	3 1/16	0.48	6	4⅞	3⅞	1.5	18	8

(a) 7½ inches at bottom.

Comparing Table 110 with Tables 106 and 112 on shoes and stems, we find that the stem has identically the same taper and is of the same diameter as its socket, while the shoe shank varies a little from that of its socket, being rough cast. With the stem, the socket has a little extra length to take up the jam of the stem. With the shoe, the socket has also spare width to take up the jam of the staves.

§ 167. STAMP STEM.—(See Fig. 131.)—This is made solid of wrought iron or mild steel. It is turned to true cylinder or it is cold rolled and has a taper at both ends, so that it can be reversed. Its duty is to connect the tappet with the boss and transmit rectilinear oscillating motion from the cam to the shoe.

TABLE 111.—DETAILS OF STAMP STEMS.

Mill No.	Material.	Length.		Diameter.		Length of Taper.	Amount of Taper per Foot.	Weight	Cost.	Life.
				Of Stem.	At End of Taper.					
		Ft.	In.	Inches.	Inches.	Inches.	Inches.	Pounds	Dollars.	Years.
27	Mild steel	13	0	3 3/16	2 11/16	5	0.60	340	.....	.....
55	Steel	14	0	3⅛	.....	.....	.....	360	.....	2
56	Iron	12	0	3	2¼	8	0.75	288	.....	Several
57	Iron	14	0	3⅛	2¾	6	0.75	363	.....	10
58	.....	14	0	3¼	.....	.....	.....	390	4.87	1 to 1½
59	.....	14	0	3	.....	.....	.....	350	15.60	Several
61	Steel	15	0	3⅜	3⅛	5	0.60	456	11.20	(a)
62	Mild steel	15	0	3 7/16	.....	.....	.....	500	.....	.....
64	Iron	14	0	3	2⅝	4½	1.00	300	12.00 to 18.00	1
65	.....	12	10	3¼	.....	.....	.....	350	.....	.....
66	Wrought iron	14	0	3½	.....	.....	.....	340	.....	(b)
67	Hammered wrought scrap	12	0	3¼	3	6	0.50	300	18.00	1½
68	.....	13	0	3⅛	.....	.....	.....	325	23.20	(c)
71	.....	12	0	3	.....	.....	.....	280	.....	2
72	.....	14	0	2⅞	.....	.....	.....	300	.....	.....
73	.....	12	0	3	.....	.....	.....	300	.....	.....
74	.....	12	0	3	.....	.....	.....	300	.....	.....
75	Refined iron	14	6	d 3¼	.....	.....	.....	364	.....	Many.
76	.....	.....	.....	.....	.....	.....	.....	300	.....	.....
77	Cold rolled iron not turned	11	0	2⅞	2 11/16	5½	0.41	260	.....	6 to 100
82	Wrought iron	14	0	3⅜	.....	5	.....	425	23.20	(c)
83	.....	12	0	3⅜	.....	.....	.....	360	.....	(e)
84	Steel	14	0	3⅜	3⅛	5¾	0.52	425	21.25	5
87	Wrought iron	.....		3	2¾	4½	0.67	.....	.....	.....

(a) Twelve out of 40 broken in 5 years. (b) New ends welded on every 3 years. (c) Eighteen out of 110 break per year. (d) Turned to 3⅛ inches. (e) Indefinitely.

TABLE 112.—TAPERS OF STAMP STEMS.

(From Authors and Manufacturers.)

Diameter of Stem.	Diameter of End.	Length of Taper.	Taper per Foot.	Reference.
Inches.	Inches.	Inches.	Inches.	
.....	.....	.....	1.0	Louis[19] (usual).
3⅜	3	5	0.9	Louis[19].
3⅜	3 3/16	5½	0.95	Louis[19].
3⅛	2 11/16	5	0.75	E. P. Allis Co.
3¼	.....	.....	0.48	Fraser & Chalmers.
3¼	3 1/16	5⅝	0.40	Hardman[188] at Oldham Mill.

The amount of taper commonly used varies from 0.40 to 1 inch per foot. (See Tables 111 and 112). American practice seems to average from ½ to ¾ inch per foot, while the English practice seems to average greater.

A stem generally breaks just above the head, sometimes just below the tappet, the points of greatest strain. In the former case it can be reversed and when it next breaks, it can have new pieces welded on the ends and be turned down anew, or be turned down at both ends without welding. When it breaks by the tappet, the two parts can be welded together and then turned down. The break is caused by repeated bending stress in different directions. Some authorities call this crystallization due to shocks, others say it is not.[29, 44*] At the Owyhee mill this breaking was partially remedied by boring out the boss and enlarging the stem at the end. The Fortuna mill, Bendigo, uses this same scheme.[21]

The details of stamp stems from the mills are given in Table 111. The figure on life, unless otherwise specified or very long, is to the time of the first break. Thus at Mill 64 the stem lasts one year before it breaks, if the ore is broken reasonably fine by the rock breaker. In two years both ends have broken and the stem has lost ten inches of its length. It is then taken to the blacksmith's shop and heated to nearly a welding heat and a new taper forged on both ends. This answers as well as turning the taper in a lathe and at the same time destroys any remains of the so-called crystallization. This process is repeated every two years. Usually, in eight years the stem is too short and the part running in the guides shows some wear, so that it is discarded, although when the wear is slight, a new piece is sometimes welded on the ends and it is good for several years more.

FIG. 131. STAMP STEM.

§ 168. THE TAPPET is made of either cast iron or cast steel, bored to fit the stem loosely. It serves to transmit the lifting power of the cam to the stamp. According to Louis, good, close-grained, tough cast iron is better than any other material, but the tendency in this country seems to be toward the use of steel. It is reversible, having a flange above and below; the lower flange receives the lifting force from the cam. The gib tappet (see Fig. 132), invented by Zenas Wheeler, is attached to the stem *A* by a wrought iron or forged steel gib *B* and two or three keys *K*. The latter number should be used for heavy stamps. There is a rib cast upon the side of the tappet to give the requisite backing for the keys. The gib is flat on the back, concave cylindrical in front to fit the stem, and is set in a recess in the tappet. The keys are of steel, slightly wedge-shaped, and force the gib against the stem sufficiently to lock the tappet at any desired height. Sharpless recommends that the middle part of the key be made of mild steel which gives a good grip while the two ends be made of high carbon steel and then hardened so that they will not buhr over when they are driven in or out. The inside of the gib should have a curve of slightly less radius than that of the stem, to give a strong grip.[19]

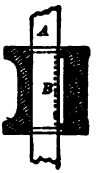

FIG. 132.—SECTION OF TAPPET.

The ends of the tappet are counter-bored about 1 inch wide and 1 inch deep, to prevent it from wearing conical and giving a lateral thrust to the stamp. The wearing surface is from 2 to 3 inches wide. Details of tappets from mills are given in Table 113, and a few dimensions in Table 114.

* See also Howe's "Metallurgy of Steel," p. 196.

TABLE 113.—TAPPETS.

Mill No.	Material.	Weight of Tappets.	Number of Keys.	Cost.	Life.	Width of Annular Wearing Face.	Weight of Stamps.
		Pounds.		Dollars.	Years.	Inches.	Pounds.
27	Cast iron	108	3	.....	.....	3	800
55	Chrome steel	150	2	12.00	1	.....	850
56	Steel	90	2	.....	Several.	3	650
57	Steel	112	2	.....	Over 9	2½	850
58	.....	100	2	12.00	10 to 12	.....	1,000
59	.....	170	2	11.00	Several.	.....	900
60	.....	.....	2	.....	.....	.....	750
61	Cast steel	106	2	13.00	Over 5.	2½	960
62	Cast steel	135	3	.....	.....	2½	1,100
64	Chrome steel	125	2	12.50	Good after 6, 7, 8	3	800
65	.....	.....	3	.....	.....	.....	.....
66	.....	130	2 and 3	.....	3 to 5	.....	850
67	High manganese iron	130	2	10.40	Over 5	2½	858
68	Chrome steel	105	3	11.50	Many.	2	800
71	.....	.....	3	.....	.....	.....	850
72	.....	.....	3	.....	.....	.....	750
73	.....	150	3	.....	.....	.....	800
74	.....	.....	3	.....	.....	.....	950
75	Pittsburg steel	112	2	.....	Very long.	.....	818
76	Steel	110	2	.....	.....	.....	750
77	Steel	49	2	3.43	.....	2	650
82	Chrome steel	135	3	13.00	Many.	2	980
83	.....	125	2	8.75	½ to ¼	.....	900
84	Steel	135	3	10.80	1	2½	978
87	Cast iron	.....	2 and 3	.....	.....	2½	850
88	.....	.....	3	.....	.....	.....	650

TABLE 114.—DIMENSIONS OF TAPPETS.

Mill or Company.	Weight of Stamp.	Length	End Diameter.	Middle Diameter	Thickness Flange		Counterbore.		Inside Diameter	Length of Gib.
					New.	Old.	Diameter	Depth.		
	Lbs.	Inches.	Inches.	Inches.	Inches.	Inches.	Inches.	Inches.	Inches.	Inches.
Homestake Mill	850	12	9	6	2½	1¾	.....	.....	.....	.....
Mill 55	850	12	9½	6½	1¾	.....	.....	.....	.....	.....
Mill 64	850	12	9	6½	2	.....	.....	.....	.....	.....
E. P. Allis Co.	850	10	9	5¼	1½	.....	4	½	3½	7
Fraser & Chalmers	850	10	9 5/16	6	1¾	.....	4	About ¾	3⅝	7

Screw tappets meshing with threads upon the stem and held in place by a key and vertical slots, were formerly used, but have pretty much disappeared from the United States. They are still used in Australia. At Mill 77, the Whecler gib tappet is found to be cheaper; it enables cold rolled shafting to be used for stems, which cost less than half as much and last longer than the threaded stems; the gib tappets are much quicker shifted and easier kept tight; the old screw tappets were always becoming loose and rattling. The screw tappet stem also is not reversible.

§ 169. Proportions between Weights of Parts of a Stamp.—In regard to the weights of the parts, it would seem wise to concentrate the weight at the bottom so that the pull upon the tappet may be as direct as possible and consequently, the wear on the guides at a minimum. This weight should be put in the head rather than in the shoe to prevent too great variation in weight due to wear of shoes. Added weight is sometimes obtained by putting on extra tappets at the top of the stems. This is not to be commended, as it makes the stamps top-heavy. The place for the weight is in the boss. The stem must be thick enough to prevent bending.

Table 115 shows the proportions of stamps in mills visited and in two Australian mills.

TABLE 115.—PROPORTIONS OF STAMPS.

Mill No.	Total Weight of Stamp. Pounds.	Shoe.		Head.		Stem.		Tappet.		Die.	
		Weight Pounds	% of Total	Weight Pounds	% of Total	Weight Pounds	% of Total	Weight Pounds	% of Total	Weight Pounds	% of Total
27	800	125	16	215	27	340	43	108	14	125	16
55	850	120	15	250	29	360	42	150	18	90	10
56	650	135	20	160	24	288	44	90	13	100	15
57	850	155	18	220	26	363	43	112	13	100	11
58	1,000 (?)	175	.....	175	.....	390	.....	100	.....	130	.....
59	900	180	20	200	22	350	39	170	19	110	12
61	960	152	16	245	26	456	47	106	11	111	12
62	1,100	159	14	290	26	500	45	135	12	120	11
63	850	150	18	.....	.....	.....	.....	.....	.....	100	12
64	800	170	21	200-210	26	300	37	125	16	125	16
66	850	140	16	240	28	340	40	130	15	121	14
67	858	128	15	300	35	300	35	130	15	110	13
68	800	130	16	240	30	325	41	105	13	120	15
71	850	150	18	.....	.....	280	33	.....	.....	90	10
73	800	160	20	200	25	300	37	150	19	100	12
75	818	162	20	180	22	364	44	112	14	112	14
76	750	160	21	180	24	300	40	110	15	100	13
77	650	85	13	280	43	260	40	49	8	47	7
82	980	120	13	240	26	425	46	135	15	120	13
83	900	150	17	200	22	360	40	125	14	100	11
84	973	175	18	238	24	425	44	135	14	100	12
Fortuna	748	198	27	159	21	325	43	65	9	152	20
Lady Barkly	828	196	24	236	28	336	41	60	7	109	13

§ 170. CAM SHAFT.—(See Fig. 133.)—It is generally long enough for two batteries with the overhang for one pulley. The object for this lies in the fact that a break in any battery causes a stop of ten stamps at most, and of five

FIG. 133.—CAM SHAFT FOR TEN STAMPS.

stamps only as soon as the stamps of the disabled battery can be hung up. The batteries are usually driven by pairs, because driving single batteries multiplies expense of belts and pulleys too much.

The cam shaft is of wrought iron or steel turned true, having a continuous longitudinal slot or key seat for each battery a little longer than the space to be occupied by the cams. The cam shaft is so heavily loaded both from the weights of the stamps and from the blows which the cams strike upon the tappets, that it must be made very strong. The diameters obtained by the author range from 4½ inches for light stamps to 6 inches for heavy stamps. The life of mild steel cam shafts at the Homestake mill is 5 years for diameters from 4½ inches to 4¾ inches, and 10 years for diameters of 5½ inches.[40] At Mills 65, 73 and 74 a spare cam shaft with cams and pulley all fitted on it, is kept in readiness and when a break occurs it is rolled into position in 3 hours while the turning and fitting of a new shaft would take at least 48 hours. Details of cam shaft are given in Table 116.

§ 171. COLLARS AND BEARINGS.—Two collars (see Figs. 90 and 91*b*) attached by set screws are used to guide the shafts inside the end bearings.

Three bearings for a ten-cam shaft, are used (see Fig. 90). In dry crushing mills these are generally not babbitted. In wet crushing mills the author found only three out of thirteen not babbitted.

At Mill 67 boxes of soft graphitic iron in connection with a mild steel cam shaft were found to give the best results. The only lubricant required is an occasional drop of light machine oil. This is preferred to babbitted boxes because: (1) there is no babbitt to crack and fall into the mortar and make sludge of the amalgam; (2) the alignment of the shaft is more constant, the wear is

TABLE 116.—CAM SHAFT AND BEARINGS.

Mill No.	Material of Shaft.	Length of Shaft.		Diameter of Shaft.	Position of Shaft.	Length of Bearings.	Bearings with or without Babbitt.	Bearings Closed by Cover or Open.	Weight of Stamp.
		Ft.	In.	Inches.		Inches.			Pounds.
27	Iron	14	0	5	Front	12	With	Closed	800
55	Steel	14	2	5	Front	12	With	Closed	850
56		14	0	5	Front	12	With	Tin cover	650
57	Iron	14	6	5.4	Front	12	With	Open	850
58				5⅛	Front				1,000
59				5½	Front				900
61	Machine steel	14	0	6	Front	2=20,8=12	Without	Open	960
62	Steel	12	0	5⅞	Front	10 and 12	Without	Open	1,100
63					Front				850
64	Iron	14	6	5	Front	14	With	Open	800
65				5¼	Front				
66	Mild steel			4⅛ to 5⅛					850
67	Mild steel	13	2	5½	Behind	12	Without	Open	858
68				5	Behind	12	With	Closed	800
71				5¼	Behind				850
72				6	Front				750
73				5¼	Front				800
74				5⅜	Front				950
75				5½	Front				818
76	Iron	13	0	5½	Behind	12		Open	750
77	Iron	a 29	6	4⅜	Behind	12	With	Closed	650
82				6	Behind	12	With	Closed	930
83				5⅛					900
84	Machine steel	14	9	5½	Front	18	With	Closed	973
87	Wrought iron	13	0	4½	Front	12	With	Closed	850
88					Front				650

(a) For 25 stamps.

more even and there is no delay from babbitting boxes every 4 to 6 months; (3) steel running on cast iron requires much less lubrication than iron on babbitt, making less oil to be guarded against and less oil for the mill.

These boxes are some times covered, as in Fig. 134, and sometimes the cap is omitted, as in Fig. 135. The use of the cap would seem desirable for keeping

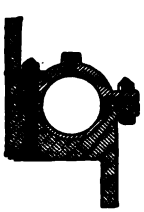

FIG. 134.

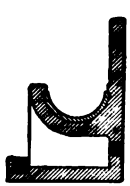

FIG. 135.

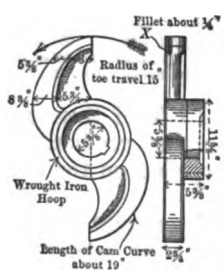

FIG. 136a. FIG. 136b.

FIG. 134.—COVERED BEARING. FIG. 135.—OPEN BEARING. FIG. 136a.—SIDE VIEW OF CAM. FIG. 136b.—FRONT VIEW.

out the dust. Diagonal boxes are sometimes used, but they hardly seem necessary as the vertical component of the pressure is probably four times the horizontal, even where a horizontal driving belt is used. The bearings need oil grooves and drip pans to prevent oil from getting to the plates.

For details of bearings as found in the mills, see Table 116.

§ 172. CAMS.—(See Figs. 136a and 136b.)—These serve to lift and rotate the stamps. They consist of one or more (generally two) arms cast on hubs which are held to the shaft usually by keys. The lifting surfaces of the arms are made spiral to suit the conditions of lifting. They are backed by strengthening ribs. The double-armed cam gives less journal friction than the single-

armed, because it revolves half as fast. Sectional cams made with split hubs bolted together can be changed without stripping the whole shaft, but unless watched they are liable to work loose and are therefore not favored. The details of cams as found in the mills are shown in Table 117.

When cast iron is used for cams a close-grained, strong grade of metal is chosen and the bearing or lifting surfaces are chilled. The author finds that out of 17 mills, 9 use steel cams, 7 use iron, and one uses both. Open hearth cast steel with 0.4% carbon, or chrome steel, is the best material for cams.[19] On account of their superior strength they need not be made as heavy as cast iron.

TABLE 117.—CAMS.

Abbreviations.—c.=cents; C. I. Ch. F.=Cast iron with chilled face; I. or Chr. S.=Iron or chrome steel; lb.=pound; p.=per; P. S.=Pittsburg steel; T. C. I.=Tough cast iron; Tr. U.=Trent Universal.

Mill No.	Style.	Material.	Weight	Cost.	Life.	Diameter from Tip to Tip	Width Wearing Face.	Greased by	With or Without Ring on Hub.
			Pounds	Dollars.	Years.	Inches.	Inches.		
27	.....	Cast iron	150	.....	.....	30	2½	Axle grease.....	.....
55	Ordinary ..	Chrome steel	230	18.40	4	36	3	Axle grease.....	Without.
56	Ordinary ..	Steel.....	150	12.00	Many.	27	2½	Axle grease.....	Without.
57	Ordinary ..	Steel.....	.....	....	10	29	1½	Oil.....	Without.
58	.....	.....	.....	5c.p. lb.	10 to 15	.....	.....	.....	.....
59	Ordinary ..	.....	.....	12.00	10	.....	.....	.....	.....
61	.....	Cast steel....	205	.....	None broken in 5	31½	2½	(a)	Without.
62	Ordinary ..	Cast steel....	.....	.....	.....	.....	2	(b)	Without
64	Ordinary ..	Chrome steel	160	15.00	None broken in 8	29	2½	(c)	Without.
66	Ordinary ..	T. C. I.....	.....	.....	3	30 to 34	2	Axle grease.....	Without.
67	Ordinary ..	C. I. Ch. F...	239	19.12	None broken in 5	34	2½	(d)	Without.
68	Blanton....	Chrome steel	235	.....	Indefinitely long.	32	2	Axle grease.....	With.
72	Ordinary ..	.....	.....	.....	1 to 14	.....	.....	.....	.....
73	Ordinary ..	.....	.....	.....	.....	.....	.....	.....	.....
75	.....	P. S.....	.....	.....	Indefinitely long.	34	.....	.....	.....
76	.....	Cast iron	175	.....	.....	.....	.....	(e)	.....
77	.....	C.I. Ch. F.(f)	140	8.05	(g)	39	2	(h)	.....
82	Blanton....	Chrome steel	235	....	Indefinitely long.	32	2	Axle grease.....	With.
83	Ordinary ..	I. or Chr. S..	150	10.50	1 to 5	.....	.....	.....	.....
84	.....	Tr. U.....	220	20.00	4	33½	2½	Axle grease.....	.....
87	.....	Cast iron....	.....	.....	.....	26	3	(i)	.....
88	Ordinary ..	Cast iron....	.....	.....	.....	.....	.....	.....	.....

(a) Graphite gear grease. (b) Mixture of graphite, tar and tallow. (c) Albany compound. (d) Graphite and tallow. Oil. (e) Castor oil or axle grease. (f) In the quick drop stamps, added since the above was written, steel cams are used. (g) Ten, barring accidents. (h) Fraser's axle grease. (i) Hard grease or soap.

The natural life of these steel cams is indefinitely long unless the mill is very dusty, when they gradually wear down. They generally go by some accident, as a stamp dropping on the cam. They generally go at the hub; sometimes the tip breaks off.[233]

A ring of wrought iron is sometimes shrunk upon the hub to receive which, a part is cut away (see Figs. 136*a* and 136*b*). This is less used than formerly, particularly with steel cams.

Cams are keyed to the shaft by one or two keys. When two keys are used, they are 120° apart, furnishing three lines of bearing, while one key gives only two lines of bearing. The former gives the greater stability, but the latter is almost universally used in this country. The key should always be driven toward the stamp stem. Hardman finds that by using a key 6 inches long, 1¾ inches wide and ½ inch thick, with a taper in its whole length of slightly less than ⅛ inch, the cams never get loose and it answers much more satisfactorily than when the taper is greater and the key smaller.

It is customary to have one long key seat in the shaft for each of the two batteries (see Fig. 133), and to cut key seats in the cams so as to give equal intervals of time between the drops. It follows that where two-armed cams are used, the key seats will be advanced 36° on the hubs of consecutive cams for a five-stamp battery, or 18° for ten stamps. In the latter case the even numbers will be in one battery and the odd in the other (see § 196).

A template for laying out the key grooves in cams is shown in Fig. 137. It consists of two similar discs rigidly fastened to a connecting pin, and an arm which swings freely on the pin. The under disc *D* is dropped into the cam hub; the arm is swung around till the pin *C* strikes the point of the cam; the upper disc *E* is then turned until the desired number of the cam comes opposite the

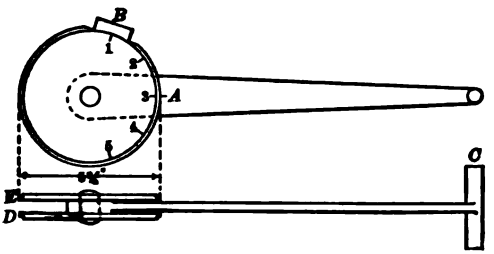

FIG. 137.

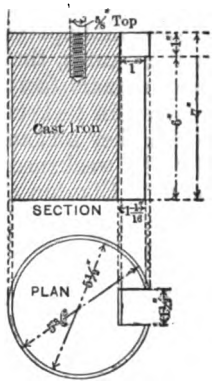

FIG. 138.

FIG. 137.—CAM TEMPLATE. FIG. 138.—DRIFTING PLUG.

mark *A* on the arm; the keyway is then marked out. To change from left hand to right hand cams it is only necessary to turn the apparatus upside down.

After the key way has been marked at the end, a drifting plug (see Fig. 138) can be used for marking the remainder and for calipering its depth so that it will exactly suit the key when the groove is completed.

Cams are removed by driving out the keys by a drifting tool (see Fig. 139). The blow acts in a direction opposite to that which set the keys in place.

§ 173. BLANTON AND OTHER SELF-TIGHTENING CAMS.—The replacing of broken cams of the ordinary type is a tedious operation. It is made still more so by the fact that the key groove has to be cut in the new cam after the break has taken place, as it is not usual to keep ten spare cams with the grooves cut in

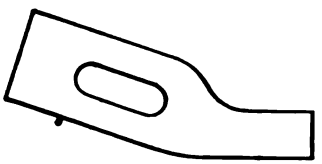

FIG. 139.—DRIFTING TOOL.

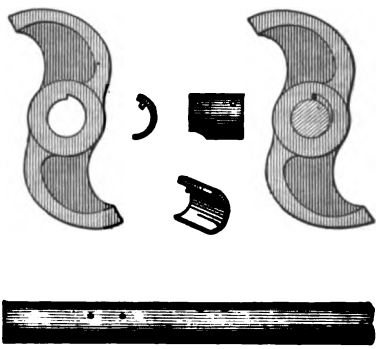

FIG. 140.—BLANTON CAM AND CAM SHAFT.

the ten positions to meet all emergencies. The Blanton cam has been devised to overcome this (see Fig. 140). This cam is attached to the shaft by a taper bushing or wedge with very acute angle, which wraps around the shaft and is held in position by two pins. The action of the wedge is such that when the cam does its work of lifting it slips on the wedge, becoming tightened thereby.

The cam may be loosened by knocking it backward. R. T. Bayliss, of Marysville, Mont., states that a shaft with ten cams can be stripped and refurnished with new cams in less than half an hour, while replacing ten cams ordinarily takes a day.

To accomplish the symmetrical arrangement of the cams around the shaft, the pin sockets are bored 36° apart for the single battery and those of the other battery are interspaced between them.

For these cams, therefore, the order of drop is settled at the machine shop at the time of manufacture. To have the order of drop in the control of the mill man, extra pin sockets would be needed. These extra sockets are not to be commended as they seriously weaken the shaft at its circumference where it can least afford to be weakened.

The New Blanton cam (see Fig. 141) replaces the single spiral wedge by ten taper faces planed on the shaft and ten corresponding faces planed in the bore of the cam. The new form not only makes the replacing of a broken cam a speedy operation, but it places the order of drop in the control of the mill man, to be changed at any time. There is one point in regard to the New Blanton cam that will be watched with interest, namely, since great accuracy is needed in cutting the spiral surfaces both on the shaft and cam bore, any irregularity will turn up in the form of uneven spacing of the drops. The wear of cams and any difference in elasticity of the metal used for cam hubs will tend in this same direction.

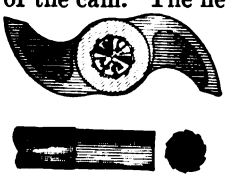

FIG. 141.
NEW BLANTON CAM AND PART OF SHAFT.

Patent cams similar to the Blanton in principle but differing in details, are now made by other manufacturers, among whom are the E. P. Allis Co., the Chrome Steel Works, the F. M. Davis Iron Works Co.

§ 174. Friction and Lubrication of Cams.—The rotation of the stamp which is accomplished by the friction of the tappet on the cam, is employed to even up the wear on the shoe and die by causing the shoe to drop in a different position each time. With rapid stamps, too much rotation indicates too little lubrication. This rotation is greater on the slow dropping stamps than on the quick, owing to the inertia of rotation of the stamps. The slow dropping stamps have longer cams, and this also causes more rotation. Although the stamps are rotating when they leave the cams, the speed of drop is so great that they are practically dropping vertically on the ore and probably no grinding action takes place even with the slowest dropping stamps.

The lubricants used are axle grease or other hard compounds, oil, tallow, molasses and water, molasses and flour, molasses without admixture, and soft soap with graphite. The last is best.[19] Axle grease is made from the grease skimmed off in the manufacture of glue from animal matter. Grease is to be avoided, or applied very carefully, when amalgamated plates are used, because it sickens the mercury.

Mill 67 reports that in starting a new mill, it is well to first grind the cams with an emery wheel with face parallel to the cam shaft, then the use of axle grease combined with graphite gives a polish and finish to the cam and the tappet, if continued for about two weeks. After that, oil from drip pans of shafting is used, and there is not the slightest trouble if the oil is put on carefully and the stems, tappets and cams wiped two or three times a day equally carefully.

The lubricant is usually applied periodically by cotton waste nailed to a stick. A strip of canvas nailed under the guides and extending beyond them laterally, or a wooden shield fastened to the battery posts, is used in most of the mills to

prevent the lubricant from getting into the mortar and on the plates. Mill 67 reports that it uses a canvas shield only until cams and tappets are faced. Mill 77 reports that no shield is used, as the cam shaft is behind the stamps and the cams revolve away from the plates. Mill 27 uses no mercury whatever and hence, has no shield.

§ 175. Lateral Thrust, Right and Left Hand Cams.—The tendency of the tappet is to push the cam away from the stamp during the act of being lifted (see Fig. 142). This is greatest at the moment of leaving the cam. If the cams on one battery are all right hand cams, while those on the other are all left hand, then the one set of thrusts will balance the other. In this way the

FIG. 142.—LATERAL THRUST.

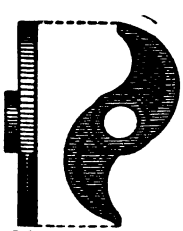

FIG. 143.

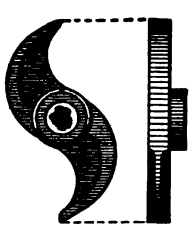

FIG. 144.

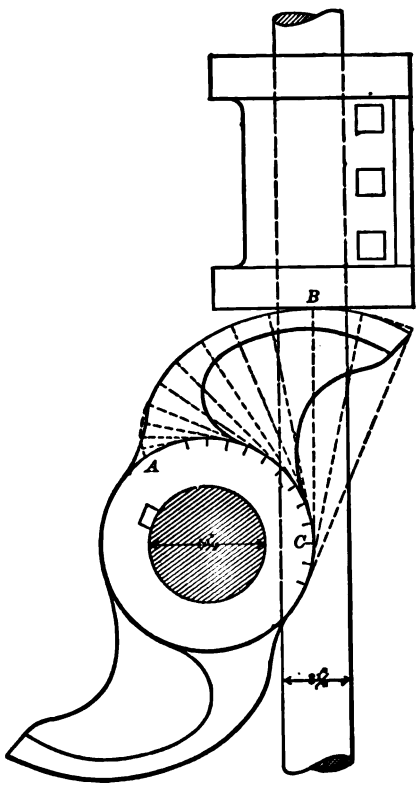

FIG. 145.—CAM CURVE.

thrust upon the collars is brought to a minimum. This thrust is greater the greater the eccentricity of the support. For this reason hubs are put only on one side of the cam. The stems are put on the opposite side and as close to the cams as is safe. The clearance is made about ⅛ inch by Fraser & Chalmers, ¼ inch by Union Iron Works.

A right hand cam (see Fig. 143) is one which is to the right of the stem when the top of it is moving from the observer; the hub also is to the right of the cam. A lefthand cam (see Fig. 144) is just the opposite.

In every instance except two in the mills visited, the cams are paired off right and left. Mill 58 has 15 right hand and 5 left hand cams on each shaft. Mill 77 has 15 right hand and 10 left hand cams, arranged on alternate batteries.

§ 176. DESIGN OF CAMS.—The lifting surfaces are in the form of an involute of a circle, the radius of which is equal to the distance between the stamp stem and the cam shaft center to center. Practically this curve is laid out by unwinding a string with a marking point at its end, from a circular disc of wood turned with the above distance as its radius (see Fig. 145). The length of string, as *BC*, unwound from any given point, as *C*, represents the height to which the stamp will be lifted by the corresponding point *B* of the involute surface, provided the whole of the surface from *A* to *B* had been used during the lift. The radius of the inscribing circle is therefore equal to the radius of the cam shaft plus that of the stem plus a small amount which is called clearance, which prevents the stem from rubbing upon the cam shaft. Table 118 gives the values of these quantities as obtained from the mills, and Table 119 gives those adopted by manufacturers.

TABLE 118.—INSCRIBING CIRCLES AND CLEARANCE USED BY MILLS.

Mill No.	Diameter of Stem.	Diameter of Cam Shaft.	Diameter of Inscribi'g Circle.	Clearance.	Height of Drop.	Mill No.	Diameter of Stem.	Diameter of Cam Shaft.	Diameter of Inscribi'g Circle.	Clearance.	Height of Drop.
	Inches.	Inches.	Inches.	Inches.	Inches.		Inches.	Inches.	Inches.	Inches.	Inches.
27	3 3/16	5	10	13/16	6 to 6½	71	3	5¼	.....	.....	6½
55	3⅛	5	15	3 1/16	7 to 9	72	2⅞	6	.....	.....	6
56	3	5	12	2	5 to 6½	73	3	5¼	.....	.....	6½ to 7
57	3⅛	5.4	9¾	⅝	7½ to 8	74	3	5⅜	.....	.....	6½ to 7
58	3¼	5½	.....	.....	6	75	3⅛	5½	.....	.....	7½
59	3	5½	.....	.....	7	76	.....	5½	.....	½	5½ to 7½
61	3⅜	6	.....	.....	5 to 6	77	2⅞	4½	15⅜	4½	16 to 18
64	3	5	10½	1¼	7 to 8½	82	3½	6	9 1/16	(?)	6 to 9
65	3¼	5¼	.....	.....	6	83	3⅛	5¼	.....	.....	7¾
67	3¼	5½	10	⅝	5 to 7	84	3⅜	5½	11	1 1/16	7 to 9
68	3⅛	5	8⅞	⅜	6 to 9	87	3	4½	12	2¼	5

TABLE 119.—INSCRIBING CIRCLES AND CLEARANCE ADOPTED BY MANUFACTURERS.

Manufacturer.	Diameter of Cam Shaft.	Diameter of Stem.	Diameter of Inscribing Circle.	Clearance.
	Inches.	Inches.	Inches.	Inches.
Fraser & Chalmers (5 stamp battery)	5	3⅛	11¼	1¼
Fraser & Chalmers (2 stamp battery)	4¾	3	11	1½
Gates Iron Works	.....	.....	(a) 9	1½
Joshua Hendy Machine Works	.....	.....	9¾	⅞
McFarlane & Co	5	3¼	10	⅞
Union Iron Works	6	3½	11	¾

(a) This is the minimum ever used by this company.

It is essential that the distance between the centers of the cam shaft and the stamp stem should exactly equal the radius of the inscribing circle; otherwise the cam will not strike fair against the face of the tappet and there will be increased jar, noise and breakage. Hardman reports that a Nova Scotia mill had 15 cams break in a week, owing to the distance between cam shaft and stamp stem being ½ inch too much. Even chrome steel cams and tappets were pulverized by being out of center.

In practice there is a dividing point at about 7-inch drop (see § 197). As we go above this point, the diameter of the inscribing circle is increased to suit the height and speed of drop, to do which, as the drop increases, the clearance can be increased by any desired amount. Below this point the works use an inscribing circle the diameter of which is nearly constant for all the lesser drops; the figures given are from 11½ to 9 inches. From Table 118 of mills, it appears that they are following the rule quite closely in regard to their inscribing circles, with the exception of Mill 55, which was probably designed for the Colorado high drop and slow speed.

In designing cams it is common to give them a little larger inscribing circle

and therefore a little longer curve than that intended to be used, so that a slight increase of drop can be had if desired, while on the other hand, a decrease of drop can be obtained as an expedient by raising the tappet and thus using only a part of the cam curve.

On the last 2 to 4 inches at the point of the cam, the curve becomes sharper, departing from the involute and approaching the arc of a circle, as shown in Fig. 145, thereby much lessening the pressure of the cam upon the tappet. The cam is cut away on the delivery side in such a manner that the tappet will leave the cam from an arc of contact between 1 and 2 inches in length, instead of from a point of contact (X see Fig. 136b). These two provisions are planned to save both the tappet and the cam from cutting and breaking at the moment of parting company.

The face of the cam is 1½ to 3 inches wide and is much thicker near the hub than at the point. It is backed by a web about 1¼ inches thick which gives the requisite support. This web for the California stamp is 3 inches wide at the point and widens to 9 inches at the hub.[40] Regarding the hub, the rule of the E. P. Allis Co. is to make its diameter equal to the diameter of the inscribing circle and its length equal to half the distance between stems center to center. Fraser & Chalmers' standard cam has a hub 11 inches diameter and 5½ inches long, and Mill 56 has a hub 10 inches diameter and 5 inches long, which figures approximately follow the above rule.

The reader is referred to the most thorough discussion of the whole subject of cam curves in Louis' "Hand Book of Gold Milling." See also § 197 under height and number of drops.

§ 177. Driving Mechanism.—The cam shaft is driven by belt and pulley (see Fig. 90), or by reducing gears from the main shaft (see Fig. 96). The former is the more usual method, reducing gears being used in the slow speed Colorado mills. With belts the usual method is to operate two batteries of ten stamps with one cam shaft. This is driven by belt from the main shaft. With gears, however, as many as five batteries or 25 stamps, are mounted on one cam shaft. This is driven by a reducing gear transmission and that in turn by a belt. Rubber belts are preferred as they are not injured by moisture.

The Pulley for belt transmission in all the mills visited, is built up of wood upon a hub and flanges of cast iron, as in Fig 91b. This is to avoid cracking due to vibration. The reader is referred to Louis' thorough discussion of this subject. Details of belts and pulleys are given in Table 120.

TABLE 120.—BELTS AND PULLEYS.

Mill No.	Diameter of Pulley.	Material of Belt.	Width of Belt.	Weight of Stamps	No. of Drops per Minute.	Mill No.	Diameter of Pulley.	Material of Belt.	Width of Belt	Weight of Stamps	No. of Drops per Minute.
	Inches.		Inches.	Pounds			Inches.		Inches.	Pounds	
27	72	.....	14	800	100	68	69	Double leather...	14	800	94
55	81	6-ply rubber.....	14	850	100	71	78	.....	14	850	82
56	72	.....	16	650	105	72	54	.....	14	750	86
57	72	4-ply rubber....	14	850	86	73	71	.....	15	800	90 to 102
58	84	.....	15½	1,000	80	74	71	.....	15	950	90 to 102
59	.....	.....	16	900	95	75	72	.....	16	818	86
61	84	5-ply rubber.....	16	960	105	77	Geared.	.....	Geared.	650	29
62	72	5-ply rubber.....	16	1,100	100to105	82	59	5-ply rubber.....	16	980	96
64	90	6-ply rubber.....	14	800	96	83	74	6-ply.....	(b)14	900	100
65	69	.....	15½	.....	98	84	72	8-ply rubber.....	14	973	102
66	72	5-ply rubber.....	14	850	85	88	Geared.	.....	Geared.	650	50
67	72	(a)	14	858	100						

(a) 6-ply rubber cross and longitudinally stitched. (b) 16 inches would be better.

The Location of the Main Shaft.—This may have the following positions: (a) in front and on the level of the cam shaft (see Figs. 105, 106 and 107); (b)

behind near mortar on cross sills (see Figs. 103, 104 and 108); (*c*) in front at a distance from the mortar on the cross sills (see Fig. 102); (*d*) behind at a distance from the mortar on the cross sills.

The distribution in the mills is as follows: Mills 57, 58, 59, 61, 62, 65, 67, 73, 74, 75 and 82, have the main shaft forward and level with the cam shaft. Mills 64, 71 and 72 have it forward on cross sills near the foot of the plates. Mills 27, 55, 66, 68 and 84 have it behind on the cross sills. Mill 56 belts direct to water wheel. Mill 76 belts horizontally backward from the cam shaft to the water wheel. Mill 77 has it 30 feet in front of cam shaft and 4 feet below it (see Fig. 146). Mill 88 has it behind on cross sills.

Shafts on a level with and in front of the cam shafts shut off the light from the plates and require strong frames, but the shafts are well placed for delivering power and for good attention. Shafts near the mortar block are in the dark, exposed to dirt and inconvenient to tend, and they require tighteners which wear the belts, but they give ample light for the amalgamated plates. Shafts on sills far from the mortar blocks are in the way of the feeder if behind, or of the plates if in front. They, however, avoid the tighteners.

THE TIGHTENER (see Figs. 90 and 91*a*) is a pulley mounted upon a frame

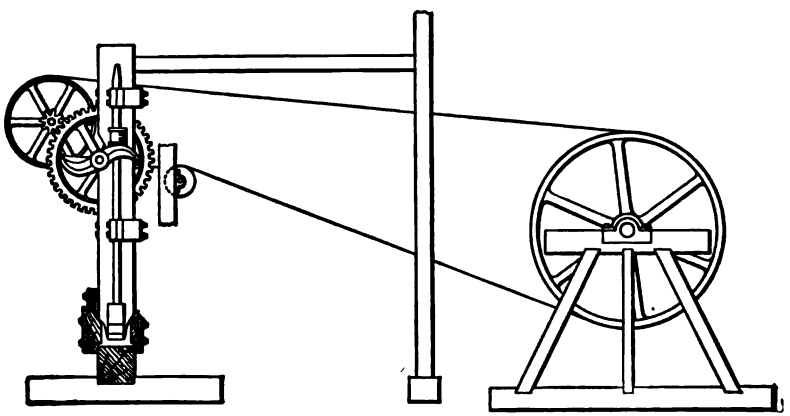

FIG. 146.—DRIVING MECHANISM AT MILL 77.

which swings on a hinge or slides in a guide in such manner as to press inward upon the belt and take up its slack when it is desired to start the stamps.

CLUTCHES.—A toggle friction clutch attaching the driving pulley to the main shaft is sometimes used. It enables two batteries to be thrown out of connection with the power at a moment's notice without stopping the mill. Eissler recommends a beveled, toothed clutch moved by a fork upon the cam shaft, for connecting the pulley. This form releases the connection if the engine is turned backward and saves the cams from breaking. Friction clutches are used in Mills 67 and 82. At Mill 74 friction clutches have been tried and discarded.

GEARING.—Mill 77 (see Fig. 146) has 25 stamps operated by one cam shaft, and in consequence, uses a gear on the cam shaft 6 feet diameter, and 6 inches face, revolving 14½ times per minute, driven by a pinion gear 1 foot in diameter and a 5-foot pulley, both revolving on the same shaft 87 times per minute. This pulley receives power by a 22-inch belt from the main shaft, 30 feet in front of the cam shaft and 4 feet below it. Mill 88 also uses gears, each set driving 10 stamps.

§ 178. WATER PIPES.—Water is fed into the battery in wet stamping to flush

out the pulp and to carry it over the plates to the vanner. Mills 27, 56, 62, 64, 68, 77, 82 and 87 have one feed pipe for each mortar, while Mills 55, 57, 61, 66, 67, 71 and 84 have two pipes for each mortar. In the latter case, 1-inch pipes are commonly used. The pipes deliver at the rear, and each pipe should have a cock. The form of cock has been a matter of discussion and the round way plug cock with a removable wrench, which will remain set for any given quantity, is undoubtedly the best form. Fraser & Chalmers prefer to add a dial and pointer to this cock, so that if shut off it can be let on again to deliver the same amount of water. The common water faucet or valve has a tendency to open or close by the jar of the mill. Another method of applying water, lately used with success at Mill 67, is to feed in from the front through ¼-inch nipples, pointing upward, one between each of the two dies at the level of the top of the foot plate, as shown in Fig. 147. The very low sill of this mortar allows this. This avoids the hard packing of sulphurets, allows the settling of the amalgam, and is an aid to a rapid clean up. Downward pointing jets did not succeed so well.

There are two systems of piping in common use. Mill 66 has a 3-inch main at about the level of the floor, running in front of the eight batteries. From this is led a 2-inch upright between each pair of batteries, branching at the top either way by 2-inch pipe. Each branch has 2 one-inch feed pipes with valves for each pipe for the individual battery. Between each pair of batteries there is also a 1-inch pipe with hose in the passageway for hosing off the plates. Mill 57 has the water main running just below the lower guide timber and takes the 2 one-inch pipes for the batteries and the hose pipes directly from the main. Arrangements for heating water will be taken up later in § 541.

§ 179. Feeders.—From the bins the ore comes by chutes to the automatic feeders (see Figs. 90 and 91*a*). It is customary to feed the battery by the fall of one of the stamps. The thickness of the layer of ore upon the die determines the lowest position the stamp can take. When too thin, either the tappet or a collar on the main stamp stem, strikes a buffer which feeds the ore. The position of this buffer can be graduated by a hand screw. In regard to the choice of stamp for operating the feeder, there seems to be no special rule. Mills 55, 56, 61, 62, 64, 73 and 84 use the center stamp. Mills 57, 65, 67, 68 and 82, use the stamp next to the end. Mills 71 and 76 use the end stamp. Mill 27 uses either the center stamp or the stamp next to the center.

Hand feeding by shovel is still used to some extent. One good man can feed 20 stamps for 12 hours,[29] although one man to 15 stamps is more common. At Mill 77, which uses the Colorado system and has low capacity, one man feeds 25 stamps per 12-hour shift. Machine feeding is cheaper than hand feeding, gives more uniform wear of dies and shoes and larger capacity, and reduces wear of screens. The distribution of feeders in the mills is as follows: Hendy Challenge feeder used by Mills 27, 53, 54, 55, 56, 57, 58, 59, 60, 61, 62, 63, 64, 65, 66, 68, 71, 73, 74, 75, 76, 82, 83 and 84; Templeton Roller feeder by Mill 72; Hammond Corrugated Cylinder feeder by Mill 67; hand feeding by Mills 70, 77, 85, 87 and 88. The Hendy feeder costs the most, but works under all conditions. The roller and Tullock feeders are both unreliable with clayey or sticky ores. For description of these feeders, see the chapter on "Accessory Apparatus," § 624.

§ 180. Finger Bars, Cam Sticks and Overhead Crab.—Finger bars are used for hanging up the stamps (see Fig. 91*a*). They are props which are pivoted upon a jack shaft resting in brackets bolted to the posts, and can be swung under the tappets to support them on the sides opposite to the cams. The five stand upon one jack shaft which must be strong enough to hold up five stamps together. The jack shafts are 3 inches in diameter and long enough to reach between the posts. The finger bars are shod on the end to prevent wear and are provided with handles. The stamp is lifted above its usual height by placing a skid or

cam stick upon the cam, and at the instant the stamp reaches the top of this lift the finger bar is swung under and so supports the stamp at a point higher than that reached by the cam.

The cam stick is either a square stick of wood, greased on the under side and shod on the top side with rubber or leather to prevent slipping on the tappet, or it is sometimes made of strips of belting riveted together. In Mill 73 the handle has a flexible connection with the stick by means of a piece of rubber hose, as shown in Fig. 148. This prevents any jar from coming to the hand.

An overhead track with a truck and a hook, supports a differential hoist which, attached to a grip, furnishes means to hoist any stamp along the line. Two common forms of this grip are shown in Figs. 149 and 150.

§ 181. Setting Up a Stamp.—The order of proceeding as described by Louis is as follows: Put the dies in place; lay a 3-inch plank on the dies; set the heads on the plank; lower the stems into the heads without packing if of a good fit,

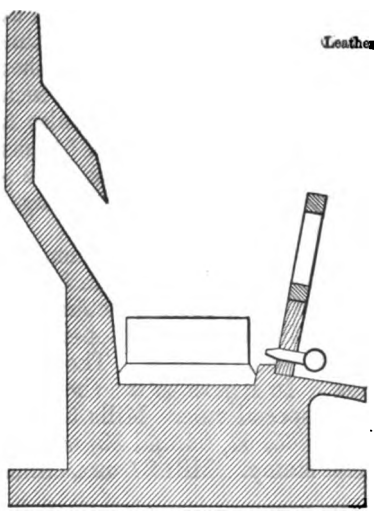

FIG. 147.—JETS FOR MORTAR.

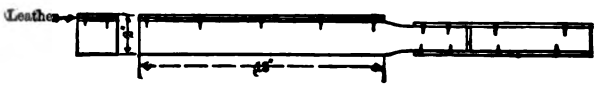

FIG. 148.—UTICA CAM STICK.

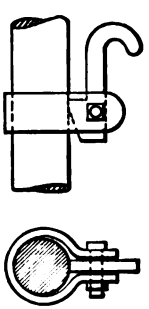

FIG. 149.—GRIP USED AT MILL 84.

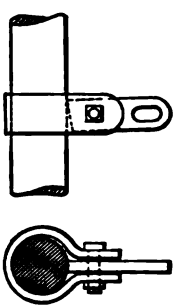

FIG. 150.—GRIP USED AT MILL 74.

or, if the socket is worn, wrap a piece of canvas or sheet iron around the stem. Tap the stem on top with a hammer (guarding it with a board), to set the stem in the head. Drop the stamp a few times at a very low drop with the cam. Hoist the stamp and place the shoe with the staves in position and again drop several times on the plank to drive the shoe home. The staves expand when wet and hold the shoe firmly. Take out the plank and put in a block equal to the height of the drop; slip tappet on stem, rotating the cam until the tappet rests upon the point of the cam; drive the tappet keys home and drop the stamp gently a few times upon a board until every part is forced into place. The tappets will have to be set again very soon.

§ 182. Maintaining Height of Drop.—As the shoe and die wear, the height of drop increases, but is restored to its normal by resetting the tappets. The practice in the mills is shown in Table 121.

At Mill 66, the resetting of tappets is done as follows: Suppose the finger bars hold the tappets 1 inch above the reach of the cams, then blocks 1 inch higher than the desired drop are set on the dies, the stamps are let down on these blocks, the tappets are let down to the finger bars, and the keys driven tight.

TABLE 121.—RESETTING TAPPETS.

Mill No.	Height of Drop at Start	Height when Tappets are Reset.	Frequency of Resetting.	Mill No.	Height of Drop at Start	Height when Tappets are Reset.	Frequency of Resetting.
	Inches.	Inches.			Inches.	Inches.	
27	6	6½	15 days.	68	6	9	When necessary.
55	7	9	20 days.	71	6½	.....	On daily inspection.
56	5	6½	Monthly.	72	6	.....	When necessary.
57	7½	8	10 days.	73	6½	7	On daily inspection.
58	6	.....	Weekly.	74	6½	7	On daily inspection.
59	7	.....	On daily inspection.	75	7½	.....	When necessary.
60	6	.....	On daily inspection.	76	5½	7½	Weekly.
61	5	6	4 or 5 days.	77	16	18	Fortnightly.
62	5	6	Fortnightly.	82	6	9	When necessary.
63	6	.....	On daily inspection.	83	7¾	8	When necessary.
64	7	8½	Weekly.	84	7	9	15 days.
65	6	.....	On daily inspection.	88	13	.....	On daily inspection.
67	5½	6½ or 7	At clean up.				

A bar may be used for lifting the stamps when necessary. Mill 67 uses the same method but the block is 2 inches higher than the drop.

At Mill 73 the preceding method is employed at the time of putting in new shoes, but the periodic shifting of tappets to allow for wear of shoes and dies, is usually done without hanging up more than one stem at a time, except that when a feed stem is adjusted, all the others must, of course, be hung up. When the battery man is ready to set tappets, he allows the battery to "pound out," so that the stamps hit the dies. He then measures the drop with a stick and notes it mentally. Next he hangs up the stamp and loosens the keys, so that the tappet can be moved the desired amount by striking it from below. The keys are then tightened and he goes on to the next stamp.

§ 183. Putting on New Shoes.—At Mill 73, new shoes are put on the stamps as follows: Hang up the stamps, remove screen and chuck block, shovel out the sand into a box, drive out the old shoes, hoist the stems, put blocks under the bosses, setting tappets at the same time, tighten the tappets, lift the stems to take out the blocks from below, put new shoes with staves on them in place under the bosses, drop stems until shoes are driven in, return the sand to the battery and close it up. The old shoes are scraped for adhering amalgam, which often lodges in cavities.

§ 184. The Clean Up consists in cleaning out the mortar, saving the amalgam, replacing worn parts, and putting in false bottoms, if used. The time of cleaning up is apt to be determined by the amount of amalgam which collects in the battery, or where inside amalgamation is not practiced, by the life of the shoes and dies. The practice in the mills is shown in Table 122. A few examples will be given to show the variations in procedure. The first will be given in full, but of the others only the points will be given in which they differ from the first.

At the Golden Star Stamp mill the clean up comes at the first and middle of the month. The former is carried on as follows:[40] At quarter of seven in the morning feeding is stopped. The stamps are made to drop slowly so that at seven o'clock there is no more ore in the mortar above the screen frame. The splash boards are removed; the stamps are hung up, the water is shut off, and the engine is stopped. The mortars on one side of the mill are then opened by removing the canvas shields, screens and chuck blocks. The canvas shields and screens are first roughly washed by playing a hose over them. They are put aside to be more carefully cleaned later on. The six chuck blocks from the batteries facing that side of the mill which is being cleaned up, are placed on two apron plates, at each of which are four men to remove the amalgam, under the supervision of the head amalgamator. This is done by scraping the inside

TABLE 122.—DETAILS OF CLEAN UP.

Mill No.	How Often.	Tools Used.	Products.
53	Weekly		Scrap iron, to waste; coarse ore, returned.
55	Monthly		Scrap iron, to waste; coarse ore, returned; amalgam.
56	Weekly	Hand pans	Scrap iron, to waste; coarse ore, returned; black sand, panned for gold.
57	Semi-monthly	Clean up barrel; mechanical batea; settling tank; clean up pan.	Scrap iron, to waste; coarse ore, returned; fine pulp, to chlorination works; amalgam.
58	Semi-monthly	Clean up barrel; hand pans	Scrap iron, to waste; heavy sand, to smelter; amalgam.
59	Semi-monthly	Small grinding pan; hand pans; amalgamated plates; settling tanks.	Coarse ore, returned; coarse pulp, to pan; fine pulp, to chlorination works; amalgam.
61	Monthly	Clean up barrel; sluices	
62	Monthly	Clean up barrel; clean up pan	Amalgam; sulphides; slimes.
64	Monthly	Clean up barrel; hand pans; batea; settling tanks.	Gold amalgam; sulphides, and waste.
65, 73, 74	Semi-monthly	Clean up barrel; hand pans; settling tanks.	Scrap iron, to waste; coarse ore, returned; coarse pulp, for next barrel; fine pulp, for chlorinating run; amalgam.
66	Semi-monthly	Rocker; clean up pan	Scrap iron, decomposed; coarse ore, returned; amalgam.
67	When a lot of ore is finished	Hand pans	Scrap iron, to waste; coarse ore and sand, returned; amalgam.
68, 82	When dies wear out.	Screens and clean up pan	Scrap iron, to waste; black sand, to market.
70	Semi-monthly		
72	Monthly	Clean up barrel; mechanical batea; hand pans; amalgamated plates.	Scrap iron, to waste; coarse ore, returned; amalgam.
75	Monthly	Clean up barrel	Sand, returned; amalgam.
76	Monthly		
77	When dies wear out.	None	All returned.
83	When necessary to put in new shoes and dies.		
84	Monthly		Scrap iron, to waste; sand, returned.
85	Semi-monthly		
87	Monthly		

plates with a chisel. The hard amalgam drops off on the apron plate beneath. As much amalgam is removed as is possible without exposing the copper. Then quicksilver is sprinkled on the plate to dilute somewhat the remaining adhering hard amalgam. This is then spread evenly over the plate and brightened by scouring with a whisk broom and tailings, and finally smoothed with a soft paint brush. The amalgam that has dropped on the apron plate is collected at the head and put under lock and key by the head amalgamator. In this same manner the chuck blocks of the entire mill are scraped and cleaned in four sets of six each. In the mean time, another set of men scrape and wash the rim and flanges of the mortar and collect the amalgam. They also remove the amalgam from the outside plates which has settled during the past 24 hours. This is then also taken in charge by the head amalgamator. The dressing of the outside plates does not take place as yet. In order to keep them soft, a little quicksilver is sprinkled over them and evenly distributed with the brush. A third set of men begin with the work on the mortar as soon as the amalgam from the apron plate has been removed. Two small platforms are placed at its head on the wooden frame for the men to stand on. They then remove the water still remaining in the mortar and shovel out the sands above the dies into a heap on the apron plate (as these sands consist simply of coarse ore and do not contain any amalgam, they are returned to the battery after the dies have been put again in place). Before the die can be taken out, the stamp has to be raised higher by an iron bar which has its fulcrum on a cross piece resting on the supports for the splash board. To keep it up, a 4-inch block is placed on the finger bar. The dies are pried up with an iron bar, lifted out and roughly cleaned. Those which are to be exchanged are taken away and piled up to be carefully scraped and washed in due time. Those that are still good are returned to the mortar without further cleaning. After the dies have been taken

out, the remaining sand, which is rich in amalgam and contains pieces of iron that have accumulated in the mortar, is shoveled out and piled up in a convenient place to be treated separately in the rocker and the pan. Any particles of amalgam that have adhered to the rough sides of the mortar are removed and added to the sands. The dies are now put in place again. If new shoes are required, they are put on as previously described in § 183. Then the recesses for the chuck block, screen frame, etc., are cleaned by directing a hose upon them, and these are put in place, the screens having first been cleaned in a wooden box with brush and water. When the chuck block is in place the sands first removed are shoveled in to fill the bottom of the mortar, up to the top of the dies. Tappets are set as previously described. When the engine has been started up, the stamps that have new shoes are first allowed to drop several times until the shoe is firmly fastened to the head. The splash boards are put back into place, ore is fed into the mortar, the water is turned on and the stamps of one battery after another are let down from the finger bars. Special care has to be taken by the feeders to regulate the ore supply, as the mortars are empty above the dies when the mill starts up. The total time required to clean up this 120-stamp mill is seven hours, employing both the night and day shift. After the clean up is over, the bottom sands are treated in a rocker. Any coarse pieces of iron are picked up and collected in a separate heap. When the sands have been rocked for a little while and the hose has been played on them, the residue on the hopper is broken up as fine as possible with a wooden mallet. The products obtained by rocking are: (1) The coarse particles remaining finally in the hopper; these are washed in a coarse screen over the clean up pan and any amalgam remaining on the screen is picked out and thrown into the pan, while the residue goes back to the battery. (2) The heavy sands that collect on the curtain and riffle, which are taken up in a bucket to be worked in the pan. (3) The sands settling in the sluice which conducts the slimes to the waste flume, which are shoveled out and returned to the battery. All amalgam goes to clean-up pan and is treated in the same way as described under Mill 66 (§ 217). The pieces of iron that are picked out from the sands in the bottom of the mortar, are first scraped to remove any amalgam adhering to them; they are then thrown out upon a heap in the yard and left there to be corroded by atmospheric action. The rusting is hastened by adding salt to the heap at various times. Once a year the iron that has entirely fallen to pieces is charged with quicksilver into the pan and its gold extracted. At the middle of the month the clean up is much simpler, as only the chuck blocks are taken out and the mortar is left intact, except, of course, when any break has occurred in shoe or die.

At Mill 73 only one battery is cleaned at a time. The water remaining in the battery is siphoned and bailed out into two rectangular pans, 15×14 inches and 3 inches deep on one side and 2 inches on the other. The low side is slipped under the holes at the edge of the mortar apron and as the bottom rests on a slope it makes the top of the sides all on the same level. The screen and the chuck block and amalgamated plate are sent to clean up room. The outside plate on the mortar lip is scraped for amalgam. The top gravel is put into a box 36×18×12 inches. The shoes are scraped off into a gold hand pan; the under gravel is put into buckets and goes to the clean up barrel (§ 228). The dies, the lip, and the splash board are scraped and the scrapings are put into one of the two rectangular pans. These two pans go to the clean up barrel. A little top sand is put in the mortar before the dies are put in, and then the parts are all replaced and stamping resumed. Total time required is 40 minutes per battery. In the clean up room the chuck blocks are scraped with iron scrapers made of old, wornout, half round files, ground to sharp edges; the

plates are re-amalgamated by the use of a little cyanide and sent back to the battery; the screens are cleaned of amalgam and then sent to the carpenter's shop for new plates, duplicate screens being always on hand to go to the battery. The amalgam obtained is ground separately for each battery in a muller mortar. The clean up barrel is also here and is described in § 228.

At Mill 67 the outside plates are dressed; the side keys loosened; the top board and screen are taken out; the screen is dried, cleaned and the buhr slots closed up by the foreman; the bottom key on chuck block is loosed until the water has all drained from the mortar, taking about four minutes; the chuck block with inside V-amalgamated plate attached, is lifted out, put on the table and the plate scraped and cleaned; the mortar sands are shoveled into a tank alongside the battery; the dies are lifted out and cleaned on planks over the long plate; the shoes are cleaned and the final sands in the bottom of the mortar are taken out by small hand shovels and added to those in the tank. One mortar can be cleaned thus in 1¼ hours. The cleaning up of the battery residue in the tank is by panning tubs and sink, gold pans and sieve.

At Mill 77, all the sand in the mortar is returned without panning, as it rarely carries much amalgam (because the plates collect it), and never any coarse gold. The scrap iron waste collects upon the bottom bar of the screen frame and is thrown out when the screens are changed or replaced. On all these accounts, the clean up only comes when the dies are worn out.

At Mill 57 the residues from the batteries first cleaned are fed into the battery last cleaned. The final accumulation from this battery is removed in buckets and panned, iron being picked out with a magnet. The heavy stuff from the panning goes to a grinding pan, while the light stuff is treated in a clean up barrel.

§ 185. Power for Stamps.—This is consumed in: (1) Lifting the stamp. (2) Friction of the cam on the tappet. (3) Friction of the cam shaft in its bearings. (4) Friction of the stem in the guides. The apparent waste of power in the blow which the cam strikes against the tappet is not real, for practically an equivalent amount of power is restored by bringing the stamp to rest at the top of its lift.

Louis has made an estimate of the power consumed for a battery of ten 900-pound stamps, dropping 7 inches 90 times per minute, the weights for which are as follows: Weight of cam shaft (15 feet × 5 inches), 1,000 pounds; weight of pulley, 2,050 pounds; weight of 10 cams, 1,410 pounds; weight of 5.1 stamps (the average number being lifted all the time), 4,590 pounds; pull of belt, 900 pounds. He gets the following results: Lifting stamp, 1.432 horse power per stamp; friction of cam on tappet, 0.209 horse power per stamp; friction of cam shaft in bearings, 0.754 horse power for 10 stamps or 0.075 horse power per stamp; friction of stem in guides, 0.005 horse power per stamp; total, 1.721 horse power per stamp.

In designing mills, Fraser & Chalmers make rough estimates for power for stamps weighing 650, 750, 850, 900 and 950 pounds as 1, 1¼, 1½, 1¾ and 1⅞ horse power respectively.

It is easy to compute from the weight, the height of drop, and the number of drops per minute, the horse power expended in overcoming gravity. The portion expended in overcoming friction, however, is not so easily computed. We may, however, obtain a ratio between the total horse power and the horse power to overcome gravity, and the ratio will prove of use in computing power for other stamps. A few determinations of this ratio are given in Table 123.

Table 124 shows the horse power required by the mills and their duty per horse power based on the calculated horse power. The column headed "Actual horse power" contains the figures either estimated or measured, as furnished by

TABLE 123.—SHOWING RATIO BETWEEN TOTAL HORSE POWER AND THAT REQUIRED TO OVERCOME GRAVITY.

Ratio.	Authority.	Total Power, how Obtained.
1.127	Von Reytt[209].....	Dynamometer.
1.099	Mill 67.....	Indicator on engine.
1.202	Louis[19].....	Theoretical calculation.

the mills. The column headed "Calculated horse power" is computed by the formula,

$$\text{horse power} = \frac{\text{Weight of stamp} \times \text{drop in feet} \times \text{drops per minute}}{33{,}000} \times 1.127,$$

in which the figure 1.127 is from Von Reytt's ratio in Table 123.

TABLE 124.—POWER FOR STAMPS.

Abbreviations.—E.=Estimated; H. P.=horse power; M.=Measured.

Mill No.	Weight of Stamp.	Height of Drop.	Drops per Minute.	Actual Horse Power per Stamp.	Calculated Horse Power per Stamp. (Average.)	Capacity per Stamp per 24 Hours.	Duty of Stamp per 24 Hours per H. P. (a)
	Pounds.	Inches.				Tons.	Tons.
27	800	6 to 6½	100	1¼ M.	1.43	2	1.4
53	750	6	100	1.3 E.	1.28	3½	2.3
54	800	7	95	.....	1.51	3	2.2
55	850	7 to 9	100	2 E.	1.98	4	2.1
56	650	5 to 6½	105	0.9 E.	1.12	6	5.4
57	850	7½ to 8	86	1¾ E.	1.61	1.6	1.0
58	1,000	6	80	.....	1.86	2	1.5
59	900	7	95	.....	1.70	1½	0.9
60	750	6	94	.....	1.20	1.7	1.4
61	960	5 to 6	105	1½ E.	1.57	3	1.9
62	1,100	5 to 6	100 to 105	1¼ E.	1.76	2 to 3	1.4
63	850	6	100	.....	1.45	2	1.4
64	800	7 to 8½	96	1½ E.	1.69	3.1	1.8
65	850	9	85	.....	1.05	4½	2.4
67	868	5½ to 7	100	(b) 1.3 M.	1.86	2½ to 3½	2.1
68	800	6 to 9	94	1 E.	1.60	1¾	1.1
70	850	6	90	.....	1.30	.....	.....
71	850	6½	82	.....	1.29	2.4	1.9
72	750	6	86	.....	1.10	2½	2.3
73	800	6½ to 7	90 to 102	.....	1.48	3½	2.4
74	950	6½ to 7	90 to 102	.....	1.75	3½	2.0
75	818	7½	86	.....	1.50	3¾	2.5
76	750	5½ to 7½	100 to 104	.....	1.42	1½ to 2½	1.4
77	650	16 to 18	29	.....	0.91	1.14	1.3
82	960	6 to 9	96	1½ E.	1.90	2.2	1.2
83	900	7¾	100	.....	1.98	2	1.0
84	973	7 to 9	100	2 E.	2.26	2½	1.1
85	850	13	30	.....	0.94	.....	.....
87	850	5	85	.....	1.02	.....	.....
88	650	13	50	.....	1.20	.....	.....

(a) Average, 1.83. (b) This is for a drop of 5½ inches.

§ 186.—Cost of Crushing by Stamps.—It is impossible to give a general figure to cover all cases, but the various items of cost can be discussed one by one, and the effect upon them of varying conditions can be shown. The figures are intended to cover merely the cost of stamping and amalgamating without including the preliminary rock breaking or subsequent concentration. The items are as follows:

(a) *Interest, Taxes, Insurance and Depreciations.*—Assuming $300 per stamp as the cost of a battery, not including cost of transportation, and allowing 10% per year for the above charges, also assuming the duty of one stamp as 2.7 tons per 24 hours, running 350 days per year, then the cost per ton crushed is 3.172 cents, which would be increased by an amount depending on the cost of transporting the machinery to the mill site.

(b) *Power.*—An average of 26 mills in Table 124 gives 1.83 tons of ore

stamped per 24 hours per horse power. Using 13 cents as the cost of a horse power per 24 hours,* the cost per ton becomes 7.136 cents. This is probably low, as in Mills 56, 59 and 72, using water power, one horse power requires 1.67, 1 and 1.67 miner's inches of water respectively, and costs 33.33 cents, 18 cents and 50 cents respectively. This makes the cost per ton stamped 18.213 cents, 9.836 cents and 27.322 cents respectively. At Mills 68, 82, 83 and 84, which employ steam power, the cost for fuel and attendance alone for engines and boilers per horse power is 28 cents, 24.7 cents, 11.625 cents and 16.5 cents respectively. This makes the cost per ton 15.301 cents, 13.497 cents, 6.352 cents and 9.017 cents respectively.

(*c*) *Wearing Parts.*—Average cost for shoes and dies in 14 mills of Table 107, is 5.030 cents per ton.

Average cost for screens in 15 mills of Table 101, is 1.233 cents per ton.

Cost of mortar linings estimated from Mills 57 and 64 at 0.5 cent per ton.

Average cost for bosses in 13 mills is 0.399 cent per ton.

Cost of stems, estimated from data given by Mill 64, is 0.276 cent per ton.

Average cost for tappets in 9 mills is 0.556 cent per ton.

Average cost for cams in 7 mills is 0.303 cent per ton.

Cost for guides, belts, etc., may be estimated at 1.000 cent per ton.

(*d*) *Mercury Consumed.*—Seventeen mills give figures ranging from 0.07 to 8.00 ounces per ton. Omitting the latter amount, which is far above all the others, the average is 0.339 ounces per ton. With mercury at $40 per flask (76.5 pounds), this amounts to 1.107 cents per ton. J. Hays Hammond[74] states that the loss of mercury is ½ ounce per ton on an average. This amounts to 1.634 cents per ton, with mercury at $40 per flask.

(*e*) *Labor.*—Figures from 12 mills range from 3.2 cents to 13.6 cents per ton. The average is 7.909 cents per ton. If hand feeding is used, it greatly increases the cost for labor. Thus, at Mill 77, six men at $3 each, are required per 24 hours for feeding 75 stamps, crushing 85 tons. This amounts to 21.176 cents per ton, almost all of which is additional to the above average figure.

(*f*) *Water Used.*—The average water used in the mills, as shown in Table 135, is 6.68 tons per ton of ore. The cost varies greatly in different mills. In mills which use mine water, the cost is counted as nothing, being charged off as mining expense. At Mills 56, 59, 72, and the Gover mill,[21] water costs 30 cents, 18 cents, 20 cents and 20 cents respectively, per miner's inch per 24 hours. A miner's inch amounts to 67.05, 67.10, 67.50 and 67.50 tons of water per 24 hours, respectively. For 6.68 tons, the cost would be 2.989 cents, 1.792 cents, 1.979 cents and 1.979 cents respectively, that is, these figures represent the cost per ton of ore crushed. Mill 84, which is in a very dry country, has to pump its water 18 miles and up 400 feet. The cost for fuel alone per ton of water pumped, is 1.097 cents. The cost for labor and incidentals would be at least as much more, making a total of 2.194 cents per ton of water pumped. This mill, however, by a system of settling and repumping at a very slight cost, makes the water go a long way, so that only 2.4 tons of water are actually consumed per ton of ore crushed. If the above assumption is correct, the cost per ton of ore is equal to 5.266 cents, but it is probably low, because the water main is 18 miles long and this will have more than ordinary interest charges.

Running of Stamps.

This includes the effects of the various conditions and adjustments upon the work of stamping, with respect to quantity of ore broken, and the quality of the pulp, that is to say, whether it is coarse or fine, and lastly, the efficiency of the

* Kent's "Mech. Eng. Pocketbook," p. 790.

battery amalgamation. In all the stamping problems, the machine will either be adjusted so as to put through the greatest amount of rock, making the minimum of slimes, or it will be adjusted to stamp finely, making a large percentage of slimes, sacrificing quantity somewhat to obtain that end. The adjustments will now be taken up and discussed individually.

§ 187. KIND OF ORE.—The harder and tougher the ore, the slower will be the crushing; the softer and more friable or granular it is, the more rapid. An example of this is in the Harshaw mill, which stamped at the high rate of 5 tons per stamp per 24 hours. The ore consisted of horn silver and decomposed quartz, clay, hydrated oxide of iron, and black oxide of manganese. Very clayey ores tend to impede crushing.

§ 188. THE SIZE OF FEED.—The smaller the lump, the more rapid will be the stamping, until it is so fine as to be unstable upon the die. A layer of rock one grain deep is the most efficient arrangement for any size, because it is struck direct by the shoe and cannot change its form without fracture. If the layers are several grains deep, they constitute a mass of particles which can yield to change of form with diminished amount of fracture.

Practically, however, there is a minimum thickness of layer below which the safety of the die would be imperiled. This thickness would be greater with a heavier stamp or high drop stamps, but an average would be about 1 inch. Hence, in wet crushing it seems clear that the most efficient size of feed is that which corresponds to this minimum safe layer, and, since preliminary crushing by breaker is much cheaper than by stamps (less than one-fifth the cost, according to Louis), the diminished cost is a strong argument for feeding the stamps with this small size. In dry crushing the conditions are different and the limit will be lower, say ¾ inch, or less. Some authorities claim smaller size than 1-inch diameter as that suitable for feeding stamps. For example, Louis places it at ¾ inch and states that it may even be economy to use two breakers, one following the other, to get this. Bernard McDonald[139] reduces the ore to ¾-inch maximum, with crushing rolls preparatory to stamps which crush 3¼ to 3½ tons per stamp per 24 hours. Rose[25] recommends ¼-inch diameter for feed for light stamps, ½-inch diameter for heavy stamps. Thus, Rose states that the Huanchaca Mining Co. increased the capacity 20% by putting rolls between the breaker and the stamps.

In mill practice larger sizes than 1 inch prevail, as is shown in Table 125. The three smallest sizes in the table, those of Mills 27, 85, 87 and 88, are middling products.

TABLE 125.—SIZES OF FEED FOR STAMPS.

Maximum Size of Feed. Inches.	Mills.	Maximum Size of Feed. Inches.	Mills.
Run of mine	58, 70, 71, 76	1½	55, 63, 66, 67, 68, 82, 83, 84
6¼ (Broken by hand)	77	1⅜	64
4 (Broken by hand)	56	¾	53
3	59	11/16	27
2¾	62	3 mesh	88
2	54, 57, 60, 65, 72, 73, 74	4 mesh	85, 87
1¾	61		

§ 189. METHOD OF FEEDING.—Whether it is done by hand or by automatic feeder, the feeding of the stamp is a most important element in the capacity of a mill. The attendant judges the condition of the layer of ore upon the die by taking hold of the stamp stem and following it down while it strikes the blow. If the layer of rock is too thin it will have a decided rebound; if too thick, it will strike with a dull, sinking blow; if right, it will strike a sharp, hard blow with hardly an indication of a rebound. It is this blow which stamps the most

rock in 24 hours, and it is well worth the expense to employ enough intelligent men to tend the feeders closely in order to attain this end.

At Charleston,[37] Ariz., in a wet stamping silver mill, the capacity of the mill was increased 5% by sifting out the fine ore previous to stamping.

§ 190.—MERCURY FED TO BATTERY.—There seems to be a number of reasons in favor of feeding mercury to the battery. Some of them will be brought out in the following discussion: A nugget of gold, lying on the die under a bed of sand is violently abraded by the blow of the stamp. This leaves a brightened nugget of gold of less size than before the blow and a number of fine floating particles which have been scoured from the surface of the larger nugget. If on the other hand the nugget is coated with quicksilver, this plastic skin greatly hinders abrasion and weights down the fine particles of gold which are abraded. As a consequence, both the nuggets and the fine abrasives are in better condition to be caught by the quicksilver of the inside or outside plates than if they had not been coated. Commercially, amalgam is a paste of little nuggets of gold, each coated with quicksilver, which may or may not have penetrated to the center of the nuggets.*

As to the quantity of quicksilver required, the mill practice (see Table 126) runs from 1 ounce up to 6 ounces of quicksilver for each ounce of gold caught. The majority of the mills appear to use about 1½ ounces per ounce of gold. Inside amalgamation as a whole, that is, the use of inside plates, as well as the feeding of mercury, is used in the majority of mills, the opinion being that it is better to catch the gold as early as possible by these means, even though capacity is somewhat diminished by the higher discharge, or wider mortar required to prevent scouring of the inside plates. No rule can be laid down for the frequency of the charging or the amount of the charge of mercury for the mortar. The only safe guide is the appearance of the outside plates. If these plates are hard and the amalgam is crumbly, sufficient mercury has not been added. On the contrary, if mercury is distinctly visible on the plates, either in drops or streaks, or if patches of bright, polished plate appear, it is evident that mercury has been added too freely. Mill 67 uses an enameled iron cup or bowl, holding ½ pint in which to keep the mercury and charges it into the mortar by pouring a sufficient quantity into the hollow of the hand and scattering it into the mouth or feed opening of the mortar.

TABLE 126.—DETAILS OF MERCURY FED TO BATTERIES.

None is fed in Mills 27, 53, 58, 68, 83, 84, 87.
Not reported in Mills 54, 55, 60, 63, 70, 85, 88.
1½ ounces mercury per ounce gold in Mills 56, 71, 75.
Fed as required, judging from appearance and hardness of the amalgam on the plates in Mills 65, 67, 72, 73, 74, 76, 82.
1 to 2 ounces per ounce gold in Mill 59.
4 " " " " " " 62.
6 " " " " " " 57.
1½ " " " " " " 77.
1½ " " " " " " 61, including outside plates.
1¾ to 2 " " " " " " 64, according to appearance and hardness of amalgam, or ¼ to ½ pound per battery per 24 hours, according to appearance of amalgam on apron plates.
It is fed hourly in Mills 56, 62, 65, 71, 73, 74.
It is fed every 2 hours in Mill 75; others not reported.

The amount of mercury fed may be used to calculate the probable result of a clean up at the end of a run. Thus W. J. Loring at Mill 73 takes the total amount of quicksilver fed during the run and assumes a product of $14 or $15 per ounce which experience has shown to be about right; to this he adds the value of hard amalgam removed by steel scrapers (see § 533), estimated at $70 per pound. The total will be very nearly the yield of the clean up. Of course the values to be assumed will vary in different mills and can only be found by experience.

* For a very full discussion of amalgams, see Louis,[19] p. 79.

With any given ore, the amount of mercury fed and the concentrates obtained day by day will usually form a basis for estimating the assay value of the ore. If one of these factors varies, the other should vary likewise provided the amalgamated plates are always kept of the same consistency.

§ 191. Area of Discharge is the total area of openings through which the water actually issues. There are two qualities of the screen which affect this: (*a*) The percentage of opening in the screen, and (*b*) the horizontal length of screen. The effect of the former upon capacity and quality of crushing has been discussed under screens. (See § 145 *et seq.*) In regard to the latter, since the splash rarely exceeds 9 inches in height on the screen, the available height is nearly constant, whatever the actual height may be. This leaves the length of the screen as the measure by which the area of discharge will be increased. Greater length can be gained by cutting down the vertical bars between the panels to the narrowest safe limit, but double discharge, that is, discharging in front and behind (see Fig. 115), gives the largest gain. Double discharge would seem logically to be advisable where high speed of crushing is sought. (See § 144.) It has, however, not found favor in most mills for the following reasons: (*a*) It requires more water per ton of ore stamped, which may dilute the pulp too much for the vanners, while the capacity is only slightly increased. At Clunes, Australia, double discharge batteries use 8 to 10 gallons of water per stamp per minute for 2¾ tons of ore crushed per 24 hours, while at Ballarat, single discharge batteries use 5 gallons per minute to crush 2 tons in 24 hours per stamp.[44] (*b*) Double discharge gives less time for battery amalgamation. (*c*) The splash or swash in the wider mortar acts less violently upon the screens, which are, therefore, more likely to clog up. (*d*) The rear screen is awkwardly situated for changing and in consequence is liable to be neglected. Bernard McDonald,[139] however, commends the double discharge. He finds the rear screen lasts as long as the front, namely, 10 to 14 days. Mill 56 also finds the rear screen lasts as long as the front.

TABLE 127.—AREA OF DISCHARGE.

Mill No.	Total Screen Area.	Net Length of Screen.	Net Area of Openings in Screen.	Capacity per Stamp per 24 hours.	Mill No.	Total Screen Area.	Net Length of Screen.	Net Area of Openings in Screen.	Capacity per Stamp per 24 hours
	Sq. Inches.	Inches.	Sq. Inches.	Tons.		Sq. Inches.	Inches.	Sq. Inches.	Tons.
27	1,056	96	322.1	2.0	68	504	42	187.0	1.75
35	1,050	About 50	387.5	4.0	71	195¾	43½	.....	2.4
55	960	96	243.8	6.0	72	432	48	59.7	2.5
57	585	45	99.1	1.6	73	308	44	70.5	3.5
58	600	50	245.4 or 298.4	2.0	74				
59	384	48	75.4	1.5	75	294	49	149.1	3.75
	480	58½	82.4		76	198	36	.....	1½ to 2½
61	259½	49	70.3	3.0	77	513	54	25.1	1.14
62	294	32	41.2 or 50	2 to 3	82	546	42	208.6	2.2
64	528	48	.....	3.1	84	1,152	96	472.1	2.5
65	288	48	76.9	3.375	87	800	100	.....	.....
67	498½	47	About 34.5	2.5 to 3.25					

§ 192. Triple Discharge, Two-Stamp Mills.—Several manufacturers, among whom are the Joshua Hendy Machine Works, Fraser & Chalmers, and the Hammond Manufacturing Co., are making two-stamp batteries, which have large area of discharge. They are especially adapted to prospecting and development work. In the Joshua Hendy design (see Fig. 151), the stamp weighs 850 pounds and drops an average of 6 inches 100 times per minute. The mortar has two end screens, the area of each of which is 115 square inches, and a front screen whose area is 236 square inches, making a total of 466 square inches screen area, which is nearly equal to that of their ordinary five-stamp battery with single issue (520 square inches).

The Hammond Manufacturing Co. two-stamp battery has the stamps weighing 850 pounds each, with speed and parts similar to regular stamp mill. The capacity of the mill is 4 to 7 tons per day, using about 4 horse power.

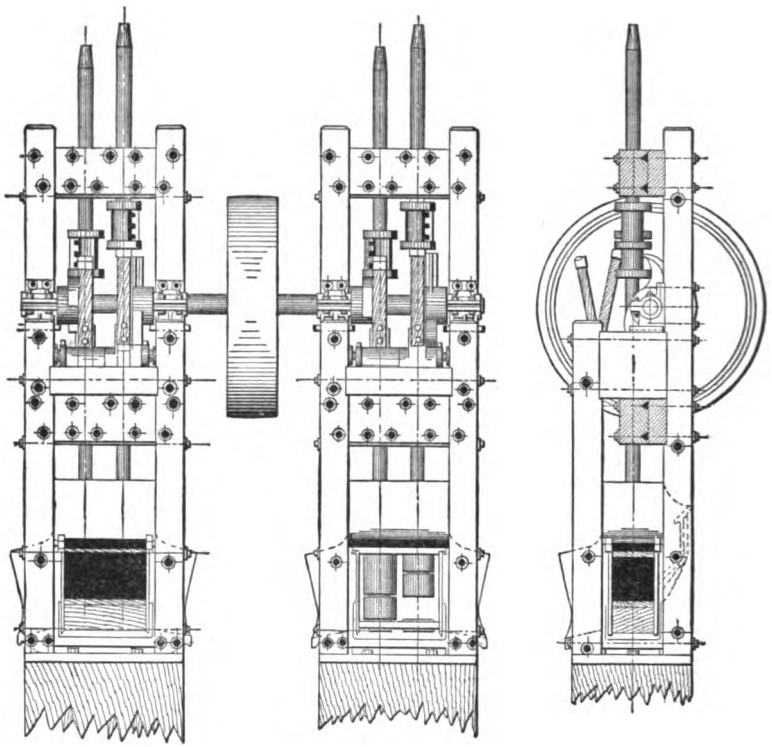

FRONT VIEW END VIEW

FIG. 151.—TWO-STAMP MILL.

§ 193. SIZE OF HOLES IN SCREENS.—Other things being equal, the larger the holes in the screen, the greater will be the capacity of the stamps, and the less will be the slimes. To illustrate this the following examples are given:

(*a*) The results of trials with three sizes of screen made at the Ontario dry stamping mill.[105] The stamps weigh 850 pounds each and drop 7½ inches 92 times per minute.

Mesh of screen used	16	20	30
Tons crushed per stamp per 24 hours	3.25	2.75	1.7
SIZING OF THE PRODUCTS.			
On 20 mesh	3.5%	0.0%	0.0%
Through 20 on 30 mesh	5.1%	4.3%	0.0%
Through 30 on 60 mesh	14.1%	14.7%	7.8%
Through 60 on 90 mesh	12.8%	11.0%	10.9%
Through 90 on 120 mesh	9.7%	11.0%	13.6%
Through 120 mesh	54.8%	59.0%	67.7%

(*b*) A trial of two sizes of screen at Mill 67:

Size of battery screen used	30 mesh	40 mesh
SIZING OF PULP.		
On 50 mesh	3%	0.5%
Through 50 on 60 mesh	5%	2.5%
Through 60 on 80 mesh	6%	4.0%
Through 80 mesh	86%	93.0%

This led to the adoption of the 30-mesh screen, as the assays showed very little difference in the two cases. With either screen the tailings above 80 mesh assayed 50 cents per ton and those below 80 mesh 56 cents per ton.

(*c*) A trial of two sizes of screen at Mill 55:

Size of screen used	10 mesh	14 mesh.
Tons crushed per 24 hours per stamp	4	2.6
SIZING TESTS OF PULP.		
On 20 mesh	18%	0.09%
Through 20 on 40 mesh	23%	18.00%
Through 40 on 60 mesh	10%	18.00%
Through 60 on 80 mesh	8%	9.00%
Through 80 mesh	42%	50.00%

(*d*) Another test at Mill 55, using a 14-mesh screen on ore that contained 12.46 ounces of silver per ton and 0.59 ounce gold.

Abbreviation.—Oz.=ounces.

	Per Cent.	Assay in Oz. Silver per Ton.	Assay in Oz. Gold per Ton.	Per cent of Total Silver.	Per cent of Total Gold.
On 20 mesh	1.12	31.75	2.92	2.99	5.56
Through 20 on 30 mesh	6.13	6.76	0.30	3.47	3.11
Through 30 on 40 mesh	5.65	6.52	1.48	3.08	14.13
Through 40 on 50 mesh	8.15	21.80	1.70	14.86	23.43
Through 50 on 60 mesh	1.44	17.49	0.62	2.11	1.57
Through 60 on 70 mesh	1.78	8.89	0.33	1.32	0.98
Through 70 on 80 mesh	4.14	7.46	1.26	2.60	8.83
Through 80 on 100 mesh	8.26	9.41	0.74	6.51	10.33
Through 100 mesh	63.33	11.90	0.30	63.06	32.12

(*e*) A sizing test at Mill 77:

On 30 mesh (0.60 mm.)	0.34%
Through 30 on 40 mesh (0.60 to 0.42 mm.)	2.31%
Through 40 on 60 mesh (0.42 to 0.25 mm.)	8.95%
Through 60 on 80 mesh (0.25 to 0.16 mm.)	1.95%
Through 80 on 120 mesh (0.16 to 0.12 mm.)	18.62%
Through 120 on 200 mesh (0.12 to 0.063 mm.)	29.98%
Through 200 mesh (0.063 to 0 mm.)	37.95%
Total	100.00%

This shows the quality of crushing under the Colorado system.

(*f*) Two mills in Placer County, Cal.[78]

Name of Mill.	Weight of Stamp.	Height of Drop.	No. of Drops per Minute.	Size of Hole.	Capacity per Stamp per 24 hours.
	Pounds.	Inches.		Inches.	Tons.
Morning Star Cement Gravel Mine	850	6 to 8	95 to 100	$\frac{3}{16}$ (round)	12
Cement Gravel Drift Mining Co	1,150	6 to 8	95	⅛	8

The capacities of these two mills are exactly proportional to the sizes of holes, even though the one which has less capacity has much the heavier stamp.

(*g*) Further sizing tests may be found in Tables 318 and 319.

On the other hand, the size of the holes should be, theoretically, small enough to free the particles of gold and auriferous sulphides from the quartz; practically this can rarely be done; we simply approach nearer to the desired condition the finer we crush. Just where the limit should be, will be found out only by experiment. Thus, at Mill 75, a trial of a finer screen (24 mesh), slightly increased the yield of free gold and also slightly reduced the loss of the same in the tailings, but at the same time, the value of the concentrates was reduced and the loss of concentrates in the tailings was increased. As this netted about the same total loss per ton in the tailings, coarser crushing produced the best results, all things considered.

Similarly, Mill 69 uses a No. 0 punched tin screen with holes 0.026 inches (0.658 mm.) in diameter and 21.0% of opening, and crushes 3.25 to 3.3 tons per stamp per 24 hours. A No. 1 tin screen with holes 0.032 inches (0.814 mm.) in diameter and 26.2% of opening, would increase the capacity about ½ ton and would effect the same saving, but the concentrates would be enriched at the expense of free gold, which is amalgamated in the former case.

The fineness of the screen affects the amount of attrition of the gold particles. A particle of gold resting upon the die is powerfully abraded by the quartz as the stamp falls upon the latter; the longer the gold nugget remains upon the die the greater the abrasion. The abrasion helps extraction to the extent that it brightens the gold nugget, but the fine gold particles which are abraded, although bright, are yet so light as to be caught with difficulty. It follows that the fine screens may overdo the limit of good work when the gold is coarse.

§ 194. Height of Discharge.—By this is meant the height of the top of the chuck block or of the lower bar of the screen frame above the surface of the die (see Fig. 112*b*.) It will be seen that as the die wears, the height of discharge will increase. For uniformity of work it is important that this height should be kept constant. To do this, four methods are used, (see Table 128): (1) By replacing a higher by a lower chuck block. (2) By reversing the screen frame, to replace the wide bar by the narrower. (3) By removing slats from the screens either outside or inside. (4) By raising the die by false bottoms.

TABLE 128.—HEIGHTS OF DISCHARGE.

Mill No.	Lifted out of Water or Not.	Height of Discharge.	How Regulated.
		Inches.	
27	(a)	1½ to 5	Not regulated.
53	(b)	0	.....
54	(a)	4	.....
55	(a)	3	.....
56	(b)	2½ to 4	Reversing screen frame.
57	(a)	4 to 6	False bottom 2 inches thick.
58	(a)	4	Removable slats on outside of screen.
59	(a)	4½	Chuck block changed for 1-inch wear of die.
60	(b)	5½	Chuck block changed for every inch wear of die.
61	(b)	5 to 6	Chuck block made of 1-inch sections.
62	(b)	6 to 7	Chuck blocks 8 and 6 inches high and reversing screen frame.
63	(b)	.....	Variable chuck block.
64	(a)	6 to 6½	Chuck block with ½-inch sections.
65	(b)	10	Variable chuck block.
66	(b)	8½	Chuck blocks 7 and 5 inches high.
67	(b)	3 to 12 (usually 7)	Chuck blocks 10, 8 and 6 inches high.
68	(a)	4 to 9½	Uses screen frames 5, 3½ and 1¾ inches wide.
71	(b)	7	Chuck block made of 1½-inch sections.
72	(b)	7	Variable chuck block.
73	(b)	10	Variable chuck block.
74	(b)	10	Variable chuck block.
75	(b)	7	Variable chuck block.
76	(b)	7 to 9	Reversing screen frame.
77	(a)	13 to 15	No regulation.
82	(a)	4 to 7½	Change screen frame 3½ to 1¾ inches.
83	(a)	4	Variable chuck block.
84	(a)	3 to 5	Chuck blocks 3, 2 and 1 inch high.
87	(a)	2 (when dies are new)	No regulation.
88	(a)	8	Variable chuck blocks.

(*a*) Stamps are lifted out of water. (*b*) Stamps are not lifted out of water.

Height of discharge affects both the quantity crushed and the quality of the crushed pulp, probably more than any other one thing. Low discharge is rapid and gives great capacity, with a corresponding absence of slimes. The particles are discharged almost as soon as they are small enough to pass through the screen. High discharge is slow and gives much increased proportion of slimes. It acts, in fact, more as a hydraulic classifier lifting over only the particles that will rise in the current produced by the feed water and the swash of the stamp. High discharge with 30-mesh screen has not infrequently been found to give

90% of pulp that would pass through 80-mesh sieve. High discharge may enable a coarse screen to be used for fine crushing and, therefore, diminishes the cost of screens.

If battery amalgamation is the primary object sought and subsequent concentration is simply auxiliary to it, then high discharge is to be advocated, that is 6 to 9 inches in California, 13 to 18 inches in Colorado, and the difficulty of concentrating the fine slimes is condoned. If, on the other hand, the battery is considered simply as a crusher, preparing the ore for subsequent concentration, while the battery amalgamated plates are auxiliary, then low discharge should be adopted. Very fine stamping under these conditions, however, is hardly possible, as it is very hard to maintain the fine screen required. Whether concentration or amalgamation is to be made the primary object, can only be decided by studying the problem of the ore. The tendency is toward the former. Three examples are given for illustration:

Mill 61 reports that the losses increase as the slimes increase. For this reason a discharge low enough to diminish sliming and high enough to favor battery amalgamation, is used.

In Mill 64, by varying the height of discharge and of the size of the holes in the sieve, the conditions giving the maximum yield were found as shown in Table 129. Of these, the No. 6 screen with 6 inches height of discharge, was

TABLE 129.—CONDITIONS TRIED IN MILL 64.

Size of Screen Hole.		Height of Discharge.	Value of Tailings per Ton.
Needle No.	Inches.	Inches.	Cents.
5	0.020	5	Trace to 20
6	0.027	6	Trace to 20
7	0.024	7	40
8	0.023	8	75

adopted, because free gold was found in the concentrates when No. 5 screen and 5 inches height of discharge were used.

Phillips[30] reports that at the Morro Velho mine, Brazil, on pyritic ore, using stamping without amalgamation followed by concentration on strakes and barrel amalgamation of the concentrates, they obtained results as shown in Table 130.

TABLE 130.—EXPERIENCE AT MORRO VELHO MINE.

Height of Discharge.	Pulp through 120 Mesh.	Drops per Minute.	Loss of Gold.	Capacity of Stamp per Day.
Inches.	%		%	Tons.
6	75.0	60	44.70	1.8
20	87.5	60	30.96	1.3

The height of the water in a battery is governed by the height of discharge and is usually from 2 to 6 inches above the top of the chuck block, although the splash may rise as high as 16 inches on the screen. It follows from this that the stamps may or may not rise above the water at every stroke. In speaking of this the author will use the words *splash* and *swash*. The splash is the effect produced when the stamp is lifted out of the water. Swash is the effect produced when it is not. The former causes a much more violent cutting action of sand and water upon the plates, screens, mortar sides, etc., than the latter. This is particularly true with a low discharge.

§ 195. STAY BATTERY AND OVERFLOW BATTERY.—Where water is very scarce and the height of the issuing water on the screen would, therefore, be very small, Rittinger reports that a stay box is used outside the mortar, which has a restricted discharge through a small nipple n_1 (see Fig. 152). The effect of this is to give a large screen area for sifting, and a very much thickened pulp through the small nipple. It has the further advantage that the screen does not clog by chips of wood and there is less sliming than in an ordinary battery. This battery is called *Stausatz,* or stay battery.

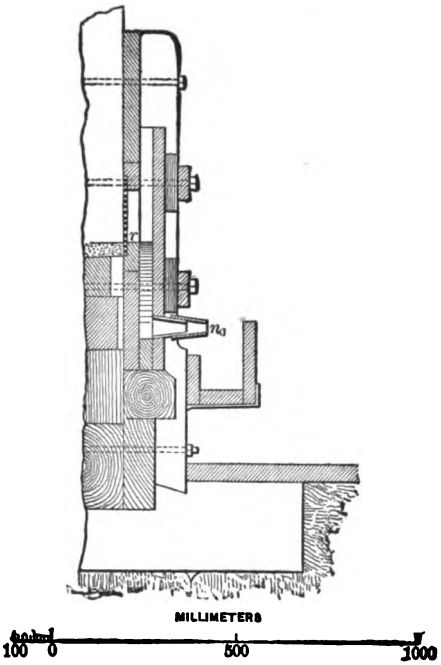

FIG. 152.—STAY BATTERY.

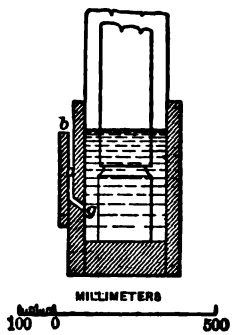

FIG. 153.—OVERFLOW BATTERY.

Rittinger also describes the *Schubersatz,* or overflow battery, which omits the screen and substitutes a narrow vertical passage *g a b* with entrance near the die, and exit at the level of the water in the mortar, thus discharging fine stuff if wide, and coarse if narrow (see Fig. 153).

§ 196. ORDER OF DROP.—This is the most efficient means of distributing the rock evenly upon the dies. The blow of the stamp upon the die should be arranged to throw ore upon the adjacent dies to feed the next following stamps. The wave motion and the lengthwise swash must be evenly balanced to prevent the heaping up of the ore at one end of the mortar, leaving the die at the other end bare, thereby decreasing the capacity.

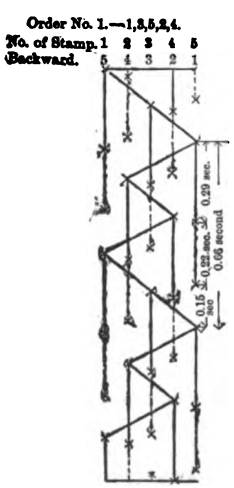

FIG. 154.

FIG. 155.

These figures are intended to show the relative positions of stamps with different orders of drop. They are taken from Table 182, which gives the estimated time for an 8-inch drop—91 drops per minute. Vertical full lines represent time for lifting; dotted lines represent time for falling; blanks represent rebound and repose. The zigzag lines are drawn through the points where the different stamps begin to rise, and thereby illustrate the order of drop.

Two principles for governing the order of drop have been given by the authorities: (1) Two adjacent stamps should never fall in succession. (2) When any stamp is striking, its neighbors should be rising. We may define the orders by considering that the observer is standing behind the battery and facing it, then calling the stamps 1, 2, 3, 4, 5, numbered from the left end of the battery toward the right, the order No. 1 is 1, 3, 5, 2, 4, by which is meant that No. 1 or left hand stamp drops first, No. 3 or middle stamp second, No. 5, or right hand stamp third and so on, or, numbered backward, that is, from right to left 1, 4, 2, 5, 3. This satisfies both the above principles (see Fig. 154.) The order No. 2, is 1, 5, 2, 4, 3, or, numbered backward 1, 4, 2, 3, 5, and does not quite fulfil either principle (see Fig. 155), but it theoretically follows the principles more nearly than any other except No. 1. On the other hand, No. 2 seems to give a more symmetrical treatment of the whole battery than No. 1.

These are the two common orders in the mills visited, thus: Order No. 1, that is, 1, 3, 5, 2, 4, or, written backward, 1, 4, 2, 5, 3, is used in Mills 27, 56, 57, 59, 60, 62, 63, 64, 66, 68, 69, 71, 72, 76, 77, 82, 83, 84, 88. Order No. 2, that is, 1, 5, 2, 4, 3, or written backward, 1, 4, 2, 3, 5, is used in Mills 58, 61, 65, 67, 73, 74, 75. When other orders than No. 1 or No. 2 are used, they generally vary the height of some stamp or stamps, to even up the work of the battery.[14] The Tenth U. S. Census (1880), Vol. 13, adds 1, 3, 5, 4, 2, or backward, 1, 2, 4, 5, 3, as in common use. Rickard gives 1, 3, 4, 2, 5 for the Fortuna mill, in which 1 and 5 drop nearly together, also 2 and 4. This order written backward would be 1, 5, 3, 2, 4. It appears that No. 1 order is the favorite.

Mill 67 found by actual test that they could stamp more ore, could get a better wave on the screen and better prevent banking at the ends, with No. 2 than with No. 1.

After extended experiments, Mill 73 adopted No. 2 order as the one that prevents banking best. Mill 69 was built with No. 1 order and found that the pulp piled up on No. 5 die. It caused also an uneven wearing of the dies, the No. 5 wearing most rapidly, so that their positions had to be shifted every two weeks. The inside plate scoured over the No. 5 die. Recently, ten of the stamps were changed to No. 2 order, with the result that all the above difficulties were overcome and a higher capacity obtained per stamp.

Rickard[21] reports that at the Golden Star mill, South Dakota, order No. 2 gave trouble from banking at the ends and was replaced by order No. 1. He also reports that 1, 3, 5, 4, 2 scoured the Deadwood Terra plates badly, but promotes rapid crushing bettter than any other.

Speed of drop will affect the tendency to heap at one or other end to some extent, for the currents of water and moving gravel from one blow, will have time to move farther with slower stamps than with faster, and this may cause a reverse bank or a balance of currents.

Where two batteries are placed upon the same cam shaft, the cams are interspaced so that No. 1 of the first battery is followed by No. 1 of the second battery and so on. Sometimes the backward or reversed order is used on the second battery, it being claimed that lateral thrusts of the cams are more perfectly balanced thereby.

§ 197. Number of Drops and Height of Drop.—There are two practices, known as the California and the Colorado stamp mills. The California mill uses a short drop and runs its cam shaft as fast as it can without danger that the rising cam shall strike the falling tappet. They run from 80 to 110 drops per minute and 5 to 9 inches drop. The Colorado mill (chiefly in Gilpin County), uses a high drop, which necessitates fewer drops per minute. They use 16 to 20-inch drop and run 26 to 32 drops per minute.[43]

As a general principle, the greater the number of drops per minute of a given

stamp, the greater the quantity of ore crushed, also the higher the drop, the greater the capacity. These two principles, however, conflict with each other. If many drops are sought, the height of drop must be small, else the falling tappet will strike the rising cam. The California practice is the result of pushing for many drops; the Colorado, for high drop.

Limits Due to Power.—D. B. Morison[204] has by the use of an indicator, showing the complete cycle of velocity of a stamp, lately made an investigation which throws a great deal of light upon the number and height of drops possible, and, at the same time, upon the diameter of the inscribing circle. His indicator consisted of a drum 7 inches in diameter, revolving with uniform velocity. The recording pencil, running between vertical guides, was attached to a washer on the stamp stem, this washer being loose and held in position by collars above and below. The battery had 900-pound stamps and Sandycroft standard cams, and was run a week to establish practical conditions before the tests were made.

TABLE 131.—ANALYSIS OF D. B. MORISON'S CURVES OF THE VELOCITY OF STAMPS.

Morison's Plate No.	Drops per Minute.	Height of Drop.	Ascent with Uniform Velocity A–B.			Ascent with Retarding Veloc. B–C		Time of Uniformly Accelerated Descent C–D.	Time of Rebound D–E.	Time of Repose E–A.	Total Time of Cycle.
			Time.	Height.	Velocity per Second.	Time.	Height.				
		Inches.	Seconds.	Inches.	Inches.	Seconds.	Inches.	Seconds.	Seconds.	Seconds.	Seconds.
9	88	6¼	0.23	6.33	27.5	0.06	0.5	0.2	0.11	0.12	0.715
10	88	6½	0.22	6.2	28.2	0.07(a)	0.84(a)	0.21	0.10	0.085	0.68
11	97	6½	0.212	6.76	31.9	0.05	0.43	0.20	0.092	0.06	0.615
12	80	8	0.284	7.64	26.9	0.06	0.56	0.23	0.125	0.05	0.75
13	84	8	0.278	7.8	28.1	0.057	0.54	0.225	0.052	0.10	0.71
14	98	8	0.275	8.12	29.5	0.048	0.48	0.222	0.100	0.00	0.645

(a) These figures are so out of the harmony with the others that they have been thrown out in the computations.

TABLE 132.—COMPUTED DROPS PER MINUTE AND DIAMETERS OF INSCRIBING CIRCLES FOR VARYING HEIGHT OF DROP.

Height of Drop in Inches	3.	4.	5.	6.	7.	8.	9.	10.	14.	18.
Time for ascent with uniform velocity in seconds	.078	.110	.141	.172	.204	.235	.266	.298	.423	.549
Time for ascent with retarded velocity in seconds	.055	.055	.055	.055	.055	.055	.055	.055	.055	.055
Total time for descent in seconds	.135	.158	.175	.192	.206	.217	.231	.244	.268	.285
Total time for rebound and repose in seconds	.150	.150	.150	.150	.150	.150	.150	.150	.150	.150
Drops per minute	143.5	126.8	115.2	105.4	97.6	91.3	85.5	80.3	65.5	55.6
Diameter of inscribing circle in inches	6.00	7.30	8.46	9.57	10.58	11.54	12.53	13.47	17.08	20.49

Table 131 shows the results obtained by analyzing and measuring his six indicator cards, of which two are given in Figs. 156 and 157. The cycle in Fig. 156, for example, may be thus stated: At *A*, the condition of the stamp is changed in an instant from repose to full velocity upward. The stamp then continues from *A* to *B* at uniform velocity. From *B* to *C* its upward velocity decreases to zero by uniformly retarded motion. From *C* to *D* the stamp falls with approximately uniformly accelerated velocity. At *D* it strikes the blow on the quartz and rebounds from *D* to *E*, and finally, the stamp is in repose from *E* to *A*. The dotted line from *A* to *B* is the actual line traced by the pencil and shows irregularities due to vibrations of the mill. The straight black line is what it would have been if those vibrations had not existed. The dot and dash line on the descending side, is put in to compare the actual path of the stamp with that of a body falling in a vacuum.

From Table 131 we may conclude that 31.9 inches per second is a maximum safe lifting velocity, which is further borne out by Table 133 of mills; that 0.055 second and 0.5 inch are the time and height respectively of retardation corresponding to this velocity (these are both averages of five out of the six figures

given); that 0.150 second is a sufficient total time to allow for rebound and repose, in order that the rising cam may not strike a falling tappet. Using these figures, we can compute the maximum number of drops possible for any given height of drop. The values in Table 132 have been computed thus: With a lift of 4 inches, for example, there will be 0.5 inch of retardation at the end of the lift, leaving 3.5 inches of uniform ascending velocity. Dividing this 3.5 inches

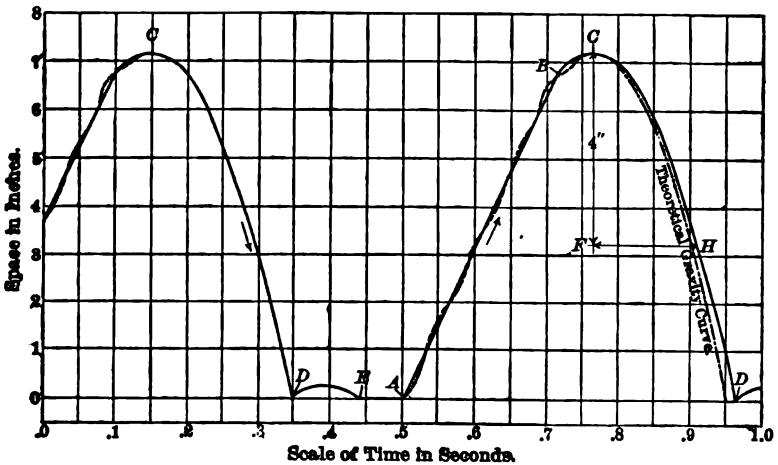

FIG. 156.—STAMP CARD, WITH TAPPET SET TO GIVE 6½ INCHES LIFT—WET CRUSHING—DROPS PER MINUTE=97

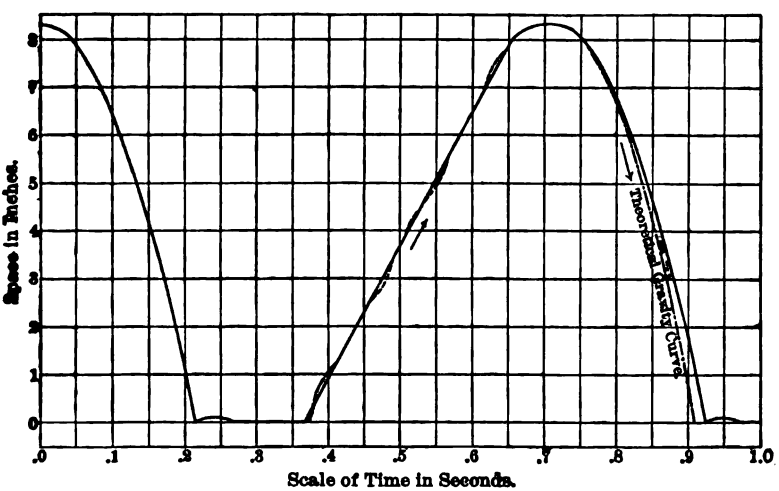

FIG. 157.—STAMP CARD WITH TAPPET SET TO GIVE 8 INCHES LIFT.—WET CRUSHING.—DROPS PER MINUTE=84.

by 31.9 inches per second, we get 0.110 second consumed in lifting the stamp at uniform velocity. The time for retardation is 0.055 second, as assumed. The total time of descent is measured on the card (see Fig. 156) from *F* to *H*, and is 0.158 second. The time for rebound and repose is 0.150 second, as assumed. The sum of all these is 0.473 second and is the total time of one cycle. Divid-

ing 60 by 0.473 we get 126.8 as the number of drops per minute that is possible for a 4-inch drop. The diameter of the inscribing circle is obtained by the following proportion, based on the fact that the height of lift is equal to the string unwound (see Fig. 145).

$$0.110+0.055:0.473=4 \text{ inches}: x$$

$x=11.47$ inches as the semi-circumference of the inscribing circle. The diameter is $\frac{2\times11.47}{3.1416}=7.30$ inches.

The figures for the other heights of drop were computed in the same way except that for those above 8 inches, the time for descent was obtained by multiplying the theoretical time of fall for the drop in a vacuum by 1.07, an average factor obtained from several comparisons on the diagrams of the actual and theoretical curves.

This table is based upon 31.9 inches per second velocity as the maximum safe speed of lifting a stamp, and a speed that should be maintained to waste the least time. It is clear from the figures, that to maintain this condition, the diameter of the inscribing circle *must* be exactly suited to the height of drop and speed. In doing this, however, for average stamps of 850 pounds weight, with height of drop less than the dividing limit of 7-inch drop, it is impossible to use the first part of the curve, because the sum of the radii of the cam shaft and stamp stem, and of clearance will be greater than the radius of the inscribing circle. There are, then, two courses possible: (*a*) to use a large inscribing circle with a shortened cam; (*b*), to reduce the sizes and weights of the parts so that the curve from the correct inscribing circle can be used. Considering, for example, a 4-inch drop, the second method allows of the theoretical 123 drops per minute, but cuts down the weights of the parts to where the stamp would probably be of no practical use. The first method is the only alternative, but it is imposssible to get the theoretical 123 drops per minute without greatly overstepppping the 31.9 inches per second maximum safe lifting velocity.

§ 198. Limits of Speed and Height of Drop Due to the Mortar.—Besides the limits due to the mechanism, there is an upper and lower limit due to conditions in the mortar. If the drop is too low, the die may not be covered by ore preparatory to the next stroke. If too high, an unreasonable wear on the dies will take place, unless a harmful thickness of layer is used on the die.[37]

The rapid drop has the indirect effect of increasing capacity by creating a more violent swash of the water which holds the fine stuff in suspension and enables the water to carry it out of the battery.

Banking, particularly at the end of the mortar, may be prevented upon a given die by increasing the height of the corresponding stamp, or the effectiveness of the swash to discharge through the screen may be increased by varying the drop of a particular stamp. Thus, at the Owyhee mill it was found of advantage to give No. 3 stamp ½ inch more, and No. 2 and No. 4 stamps ¼ inch more drop than No. 1 and No. 5 stamps.[29] This expedient is not to be recommended, however, as it hinders inside amalgamation, and because the proper use of the usual adjustments will cure the evil.

§ 199. Weight of Stamps and Effectiveness of Blow.—Closely connected with height of drop and number of drops in considering the efficiency of stamps, is the weight of the stamp. As a general rule, we may say the crushing capacity of a single blow increases almost directly as the weight of the stamp when speed, height, etc., remain unchanged.

The effectiveness of the blow can be stated for comparison in two ways: (*a*)

as pounds weight of stamp per square inch of die, and (b) as foot pounds per square inch, in which the element of height is included. Table 133 gives both these values for the mills visited by the author. The first, which is obtained by dividing the weight of the stamp by the area of the die in square inches, varies from 12.6 to 19.4. Louis recommends from 11 to 14 to be used in designing stamps. The second method, which is by far the better, is obtained by multiplying the weight of the stamp in pounds, w, by the drop in inches, h, and dividing the product by 12 times the area of the shoe in square inches, a, which is stated by the fraction $\frac{w \times h}{12 \times a}$. This value is equal to $\frac{w\,v^2}{64.4a}$ where v is the velocity in feet per second that the stamp would acquire if it fell freely in a vacuum. The values in Table 133 were computed by the first of these two expressions and vary from 6.20 to 18.3 foot pounds per square inch. The stamp never quite delivers the energy indicated, because the velocity falls a little short of the theoretical on account of the friction of the guides and water. Morison finds, comparing the dot and dash and the full line (Figs. 156 and 157), that the loss of energy is 17% with well lubricated stamps, and estimates that it may increase to 25% under average conditions of work. Louis,[49] in discussing Morison's

TABLE 133.—EFFICIENCY OF STAMP BLOW.

Abbreviations.—In.=Inches; Lbs.=Pounds; No.=Number; Sq.=Square.

Mill No.	Weight of Stamp.	Height of Drop.	Drops per Minute.	Diameter of Die.	Weight per Sq. Inch. (a)	Average Foot Lbs. per Sq. Inch. (b)	Maximum Size of Feed.	Size of Screen Hole.	Height of Discharge.	Capacity per 24 Hours.
	Lbs.	In.		In.	Lbs.		Inches.	Inches.	Inches.	Tons.
27	800	6–6½	100	8½	14.98	7.34	31/32	.035 Sq.	½–5	2
53	750	6	100	.....	.....	.....	32	.028 Sq.	0	3
54	800	7	95	.....	.....	.....	2	24 mesh.	4	3½
55	850	7–9	100	8½	14.98	9.99	1½	.043 Sq.	3	4
56	680	5–6½	105	8	12.98	6.20	4	.053 Sq.	2½–4	6
57	850	7½–8	86	9	13.36	8.63	2	.03 round.	4–6	1.6
58	1,000	6	80	8½	17.60	8.81	Run of mine.	.021 or .028 Sq.	4	2
59	900	7	95	9	14.15	8.25	3	.025 round.	4½	1½
60	750	6	94	8½	13.22	6.61	2	40 mesh.	5½	1.7
61	980	5–6	105	9	15.09	6.92	1¾	.032 round.	5–6	3
62	1,100	5–6	100–105	8½	19.36	8.88	2½	.024 or .029 "	6–7	2–3
63	850	6	100	8½	14.98	7.49	1½	25 mesh.	.....	2
64	800	7–8½	96	9	12.59	8.12	1½	.027 slot.	6–6½	3.1
65	.....	6	98	8	.....	.....	2	.030 round.	10	3⅝
66	850	9	85	9	13.36	10.02	1½	.024 slot.	10	4
67	858	5–7	100	8½	15.12	7.56	1½	.025 slot.	(c) 3–12	2½–3¼
68	800	6–9	94	8½	14.08	8.81	1½	.020 Sq.	4–9½	1¾
70	850	6	90	8½	14.98	7.49	4 mesh.	.....	.....	.....
71	850	6½	89	8½	14.98	8.12	Run of mine.	30 mesh.	7	2.4
72	750	6	86	8½	13.22	6.61	2	.022 slot.	7	2.5
73	800	6½–7	90–102	8	15.92	8.96	2	.030 round.	10	3.5
74	980	6½–7	90–102	8½	16.75	9.42	2	.030 round.	10	3.5
75	818	7½	86	8½	14.40	9.01	.....	.045 Sq.	7	3¾
76	780	5½–7½	100–104	8½	13.22	7.16	Run of mine.	36 mesh.	7–9	1½–2½
77	680	16–18	29	8	12.98	18.32	Run of mine, 4½	.017 slot.	12–15	1.4
78	980	6–9	96	8½	16.39	10.24	1½	.020 Sq.	4–7½	2.2
79	900	7¾	100	8½	15.86	10.24	1½	.017 Sq.	4	2
84	973	7–9	102	9½	13.73	9.15	1½	.016 Sq.	3–5	2½
85	880	12	80	8½	14.98	16.24	Run of mine.	.....	.....	.....
87	880	5	85	8½	14.98	6.24	(d)	24 or 30 mesh.	(e) 2	.....
88	650	13	50	.....	.....	.....	3 mesh.	.025 slot.	8	.....

(a) Average, 14.88. (b) Average, 8.90. (c) Usually 7. (d) Through 4 mesh on 12 mesh. (e) With new dies.

paper, says that the loss of velocity amounts to between 15 and 37%. Since energy varies as the square of the velocity, this corresponds to a loss of energy of from 28 to 60%.

When we consider that of all the work put in to a stamp only 88.73% is applied to actual lifting (see § 185), and that of this, 17% at least is not re-

covered, we have 73.65 % left as the final efficiency of the gravity stamp under the most favorable conditions.

Referring to Table 133, Mill 56 has the lowest figure of 6.20 foot pounds per square inch. This is a gravel mill, crushing very coarse where the cement can be perfectly disintegrated without fine stamping the gravel. On the other hand, Mills 77 and 85 have the highest figures of 18.32 and 16.24, respectively. These are the only mills using the Colorado system, and they are seeking for the finest possible crushing of the ore. In the regular California mills the figures run from 6.6 to 10.2.

Hardman has found at the Oldham mill, which treated custom ores, that the blow should be regulated according to the individual character of the ore, and since it is impossible to change the weight of the stamp, the regulation is made by changing the height of the drop. Thus, for example, for a harder ore, 8-inch drop would be suitable, while a 6-inch drop would suit a softer ore. The former corresponds to 10.08, the latter to 7.56 foot pounds per square inch.

Louis calls attention to the fact that the work required to lift a stamp weighing W pounds through a height H feet is WH foot pounds, while the momentum of a falling stamp is $WV=W\sqrt{64.4\ H}$. Therefore the work of lifting varies as the height, while the work given out by the blow varies as the square root of the height. In consequence, the "most economical way of employing power in a stamp mill is by making the weight as great, and the height of drop as small, as is consistent with convenience in practice." It will be seen that this is borne out in mill design.

At the Penn mill and Iron City mill,* working on the same ore from the Concrete mine, 17½ cords (a cord is about 9 tons), or 157½ tons, took 9 days at the former with 25 slow drop stamps, while at the latter, 18 cords, or 162 tons, took 3⅛ days with 25 fast drop stamps, and at the same time the fast drop stamps yielded 7½ pennyweights more gold per cord than the slow drop stamps. The ore ran about 3 to 4 ounces gold per ton. The ore was quartz, containing considerable iron sulphide. At the Iron City mill the ore fed was from a grizzly with 1⅞-inch spaces and a Blake breaker, set at 2 inches. The speed of the stamps was 58 to 65 drops per minute and the height of drop was from 8 to 12 inches, average about 9 inches. Each stamp weighed 700 pounds. The height of discharge was 8 inches. The screen was 7×48 inches. Each stamp used 2.2 gallons water per minute.

The Alaska-Treadwell mill[124] has adopted, after numerous experiments, 1,000 pounds weight as the maximum that can be satisfactorily used. Greater weight gave increased capacity, but hindered amalgamation by the rapid rush of the pulp over the plates.

California practice has adopted 800 to 900 pounds as the most satisfactory weights (see Table 133).

At the Oro Fina mine,† Big Cañon, Cal., 1,450-pound stamps, dropping 6 inches, 95 drops per minute, crushed 3 tons per stamp per 24 hours. Later 1,130-pound stamps, dropping 6 inches, 107 drops per minute, crushed 3 tons per stamp per 24 hours. The latter stamps were much easier on the frame, and figure out only 87.4% of the power of the former.

The difficulty with the heavy stamps lies in the fact that the frame must be built extremely strong to resist vibration, and the expense increases out of proportion to the increased duty of the stamp.

The difficulty with extremely light stamps is that they do little work unless given high drop, and if given high drop, the drops per minute must be much re-

* Private communication, Auguste Mathes and S. V. Newell.
† Private communication, P. G. Parlow.

duced to prevent the rising cam from striking the falling tappet and hence, the advantage is lost.

Light stamps and short drop are used in gravel milling (see Mill 56); also with soft ores, for example, the Dahlonega district, Georgia (see Figs. 95*a* and 95*b*), where the stamp is used upon lumps that are not disintegrated by hydraulicking. The stamp weighs 450 pounds and drops 9 inches, 80 times per minute.

TABLE 134.—STAMP MILL PRACTICE IN SOUTH AFRICA.

Abbreviations.—d.=pence; In.=inch; Lbs.=pounds; s.=shillings.

Mine.	Number of Stamps.	Weight of each Stamp.	Number of Drops per Minute.	Height of Drop.	Average Depth of Discharge	Capacity per Stamp per 24 Hours.	Meshes of Screen per Linear In.	Cost of Milling per Ton
		Lbs.		Inches.	Inches.	Tons.		s. d.
Bonanza	40	1,150	96	8½	4½–6	5.48	26	4 3.50
City & Suburban	160	1,000	96	7½	5½	5.01	26	3 9.58
Crown Reef	120	956	97	8½	4½–6	4.97	26	2 8.18
Ferreira	80	850	94	8½	4	4.38	26	3 4.29
Geldenhuis Estate	120	950	97	8	6	4.75	26	2 5.02
Geldenhuis Deep	200	1,050	96	8½	5–7	4.38	26	3 2.76
Jubilee & Salisbury	50	950	95	8	4	3.75	24	2 4.00
	50	900	95	8	4	3.75	24	2 4.00
Meyer & Chariton	80	1,000	94	8	2½	4.34	22	2 9.74
New Primrose	160	1,088	96	8	4½	5.28	24	2 8.64
New Comet	60	1,050	.....	.....	.....	.....	.....	.....
	40	1,250	96	8	3	4.21	24	3 1.88
Robinson	120	930	97	8½	4–5	4.60	28	3 8.34
Simmer & Jack (new mill)	280	1,250	95	8–9½	6¼–7¾	.....	24	.....
Simmer & Jack (old mill)	100	1,000	95	8½	.....	4.49	24	3 11.08
Wolhater	100	1,050	95	7–8	3½	4.62	22	3 1.84

The height of discharge is 2 inches when the dies are new. The screen has 121 holes per square inch. The mill crushes 2 to 5 tons per stamp in 24 hours.

In South Africa, where the aim is not to get the maximum extraction by amalgamation but rather to combine amalgamation with cyaniding and at the same time to use such stamps as will give the maximum crushing capacity, crushing no finer than is necessary for the cyaniding, the practice in the recently built mills is to use heavy stamps, weighing from 1,100 to 1,250 pounds. Table 134 shows the weights in a number of mills, together with the other adjustments and the capacities.

§ 200. Amount and Temperature of the Water.—Only the former will be treated here, the latter being reserved until the chapter on "Amalgamation," (see § 541.) The quantity of water used in stamping varies with the amount that is available and also with the treatment which is to follow. The greater the quantity of water, the more rapid will be the stamping, and the less the sliming, for the reason that the crushed particles will be taken out of the way as soon as they are crushed, by a large quantity of water. This increase, however, is not proportional to the amount of water and as water increases, very soon reaches a practical maximum. With a small amount of water, the crushing of the next fragments is seriously hindered by the fine ore which has not yet been discharged, and which is crushed finer in consequence. If we carry the idea still further in the direction of diminution of water, we reach a condition where the mortar is filled with mud and the stamp ceases to crush anything. Beyond this we have dry crushing used in dry silver mills. For this, the ore must be dried preparatory to stamping. The mortars are double issue (see Fig. 115), and discharge at the level of the die. The screens are housed in to confine the dust and worm conveyors, running in front and behind the mortars, collect the crushed ore for the whole mill. The dry crushing stamp has a low capacity with about double the cost per ton compared with the wet, and consequently,

makes a larger percentage of fines, as is well shown by the following test of the product of the Blue Bird mill Butte, Mont. Through 20 on 30 mesh (1.0 to 0.6 mm.), 1.00%; through 30 on 40 mesh (0.6 to 0.42 mm.), 1.03%; through 40 on 60 mesh (0.42 to 0.25 mm.), 4.93%; through 60 on 120 mesh (0.25 to 0.12 mm.), 6.42%; through 120 mesh (0.12 to 0 mm.), 86.62%. The ore was principally silica and was crushed by 800-pound stamps, making 90 drops per minute of 8 inches. Screen used was 20 mesh with 0.61 mm. holes. Sizing tests of the Ontario dry crushing mill have already been given in § 193.

The treatment which is to follow wet stamping limits the quantity of water, because both the amalgamated plates and the concentrating machines work at a disadvantage with too much water.

Table 135 gives the quantity of water in gallons per minute per stamp and in

TABLE 135.—WATER USED IN STAMPING.

Mill No.	Capacity per Stamp per 24 Hours.	Water Used per Stamp per Minute.	Water Used per Ton of Ore Stamped. (a)	Mill No.	Capacity per Stamp per 24 Hours.	Water Used per Stamp per Minute.	Water Used per Ton of Ore Stamped. (a)
	Tons.	Gallons.	Tons.		Tons.	Gallons.	Tons.
55	4.0	2.64	3.95	68	1.75	2.	6.85
56	6.0	6.69	6.68	71	2.4	3.	7.49
57	1.6	2.	7.49	72	2.5	3.25	7.49
58	2.	4.7	14.08	73	3.5	1.7	2.92
59	1.5	4.	15.97	74	3.5	1.7	2.92
60	1.7	3.	10.57	75	3.75	2.	3.19
61	3.	3.6	7.19	77	1.14	2.	10.51
62	2 to 3	2.	5.99 to 3.99	82	2.2	2.	5.45
64	3.1	3.	5.80	84	2.5	1. (b)	2.40
65	3.5	1.7	2.92				
66	4.5	3.25	4.32				
67	2.5 to 3.25	2.5 to 3.25	6.00		(c) 2.83	(c) 2.77	(c) 6.68

(a) 1 gallon=8.3389 pounds; 1 gallon per minute=6.00399 tons in 24 hours. (b) This does not include what is re-pumped to the stamps. (c) This is the average of all.

tons of water per ton of ore crushed. The former is the usual mode of expressing it. Nineteen mills in Australia and New Zealand (taken from Rickard[21]), when averaged gave 2.13 tons of ore crushed per stamp per 24 hours, and used 5.43 gallons of water per stamp per minute, or 15.87 tons of water per ton of ore. The water used is large, due to the fact that several of the mills use double discharge. Louis[19] gives as general practice, 80 to 240, or an average of 150 cubic feet of water per ton of ore. This corresponds to 2.5 to 7.5 tons, or an average of 4.69 tons water per ton of ore.

§ 201. ADVANTAGES AND DISADVANTAGES OF GRAVITY STAMPS as compared with rolls and grinders may be expressed as follows:

Advantages.

1. They are simple in design and simple and comparatively economical in operation, not requiring skilled mechanics.

2. They not only crush fine at one operation, but they successfully combine this crushing with amalgamation. They are more successful than any of their competitors in the way they brighten the gold for amalgamation.

3. They are adapted to the treatment of a great variety of ores, and in many cases, give better results than any other process.

4. There is no great loss of power by friction.

5. A disabled battery may be hung up and repaired without delaying its associate.

Disadvantages.

1. The first cost is large and transportation charges are high.

2. The strains are excessive, necessitating heavy frames and large and expen-

sive foundations. In consequence, they are cumbersome and require a great deal of space.

3. They are not a positive machine, that is, the power consumed is a constant, whether the rock is broken or not.

4. There is danger of over-stamping and sliming.

5. They are not well adapted to dry crushing, because of their small capacity when so used.

These disadvantages are not so important as they at first appear. The excessive first cost and cost of transportation appear much smaller when based on the total amount of ore crushed. Sliming the ore may be avoided to a great extent by making suitable adjustments. In some cases it may happen that sliming is an advantage.

In spite of the frequent attempts to replace stamps by other machines, the advantages of the former so greatly exceed their disadvantages that their continued use for gold extraction is quite certain, especially for hard and free-milling ores; though for some ores other processes are more suitable.

Bibliography for Gravity Stamps.

General articles on gravity stamps giving description, comments on running, figures on capacity, wear, etc., will be found in the books of the following authors:

1. Bilharz, O., (1896), "Mech. Aufbereitung," Vol. I., pp. 90, 99.
2. Callon, J., (1886), "Mining," Vol. III., p. 38.
3. Davies, D. C., (1886), "Metal. Min. & Mining," p. 353.
4. Davies, E. H., (1894), "Mach. Metal. Mines," pp. 248, 359, 370, 388.
5. Egleston, T., (1887), "Metallurgy," Vol. I., pp. 25, 152, 218.
6. *Ibid.*, (1890), Vol II., pp. 366, 422.
7. Eissler, M., (1896), "Metallurgy Gold," pp. 23, 74, 85, 92, 95, 102, 118, 129, 416, 623, 629.
8. *Ibid.*, (1891), "Metallurgy Silver," pp. 32, 47, 93, 115, 207.
9. Foster, C. Le N., (1894), "Ore and Stone Mining," p. 548.
10. Gaetzschmann, M. F., (1864), "Aufbereitung," Vol. I., p. 152.
11. *Ibid.*, (1872), Vol. II., p. 631.
12. Goupillière, Haton de la, (1885), "Exploitation des Mines," Vol. II., p. 701.
13. Hunt, R., (1884), "British Mining," p. 724.
14. King, Clarence, (1870), "Geol. Exp. 40th Parallel," Vol. III., pp. 195, 206, 265, 548, 574.
15. Kirschner, L., (1898), "Erzaufbereitung," Part I., p. 73.
16. Kunhardt, W. B., (1893), "Ore Dressing," p. 46.
17. Linkenbach, C., (1887), "Aufbereitung der Erze," p. 35.
18. Lock, A. G., (1882), "Gold," p. 1000.
19. Louis, H., (1894), "Gold Milling," pp. 88, 108, 249, 479.
20. Phillips, J. A., (1887), "Metallurgy," pp. 701, 773.
21. Rickard, T. A., (1897), "Stamp Milling." (A collection of articles which appeared in the *Eng. & Min. Jour.*, by the same author.)
22. Rittinger, P. R. von, (1867), "Aufbereitungskunde," p. 58.
23. *Ibid.*, (1870), "Erster Nachtrag," p. 14.
24. *Ibid.*, (1873), "Zweiter Nachtrag," p. 3.
25. Rose, T. K., (1894), "Gold," pp. 90, 99, 184, 435.
26. Smith, Oberlin, (1896), "Press Working of Metals." This book gives information on punching screens and discusses the question of gauges.
27. Zirkler, H., (1895), in *Berg. u. Hüttenwesen des Oberharzes*, p. 219. Details and capacities of stamps at Clausthal.

---

28. *Am. Inst. Min. Eng.*, Vol. I., (1871), p. 40. R. W. Raymond. Elaborate discussion of the weight, speed and height of drop which gives the greatest efficiency in tons crushed per horse power.
29. *Ibid.*, Vol. II., (1874), p. 159. J. M. Adams. Advantages of preliminary fine crushing and of hand feeding. Details of stamps at Owyhee wet silver mill. Disadvantages of inside amalgamation.
30. *Ibid.*, Vol. VI., (1877), p. 470. J. C. F. Randolph. Details of stamps at Clausthal.
31. *Ibid.*, Vol. VIII., (1880), p. 362. R. H. Richards. Some directions for running stamps.

32. *Ibid.*, Vol. IX., (1880), p. 84. H. S. Munroe. Discussion of the efficiency of steam, pneumatic, and gravity stamps as effected by the weight, speed, height of drop, and area of discharge.
33. *Ibid.*, p. 420. E. Clark, Jr. Details of stamps with rectangular stems, with round stems and with open stems at Przibram, Bohemia, all using stay battery.
34. *Ibid.*, p. 646. T. Egleston. Causes of failure of gold to amalgamate in stamp mill.
35. *Ibid.*, Vol. X., (1881), p. 87. A. J. Bowie, Jr. Details of frame, stamp, mortar, etc., at the Father de Smet mill in the Black Hills.
36. *Ibid.*, Vol. XI., (1882), p. 29. A. N. Rogers. Discussion of the Colorado and California systems of stamping.
37. *Ibid.*, p. 91. W. L. Austin. Details of stamps at Harshaw and Charleston mills, Arizona.
38. *Ibid.*, Vol. XII., (1883), p. 379. T. Egleston. Effect of stamping on particles of gold.
39. *Ibid.*, Vol. XIII., (1884), p. 114. C. A. Stetefeldt. Stamps are compared to Krom's rolls with respect to original cost and running cost.
40. *Ibid.*, Vol. XVII., (1889), p. 498. H. O. Hofman. A very full detailed description, including dimensions, of Homestake and other mills in Black Hills. Figures on capacity, wear, costs, labor, losses, etc., are given, together with details of operation.
41. Omitted.
42. *Ibid.*, Vol. XX., (1891), p. 324. H. Louis. Description of a very crude stamping machine used by the Chinese.
43. *Ibid.*, Vol. XXII., (1893), pp. 321, 654. J. Douglas. History. Comparisons of Colorado and California systems of stamping.
44. *Ibid.*, Vol. XXIII., (1893), pp. 137, 545; also Vol. XXIV., p. 809. T. A. Rickard. Discussion of Colorado and California systems of stamping, with comparative figures on details, capacities, costs, extractions, losses, etc. Life of different materials for wearing parts. Concentration previous to stamping. Effect of hammering the gold. Crystallization of stamp stems. Effect and remedy for acid water.
45. *Ibid.*, Vol. XXIV., (1894), p. 208. E. R. Abadie. Details of stamps at North Star mill. Life of wearing parts.
46. *Ibid.*, Vol. XXV., (1895), p. 130. W. S. Morse. Details of stamps, mortars and plates, for a mill of the Colorado type in Arizona. Wear of screens, shoes and dies. Capacity and water used.
47. *Ibid.*, p. 661. H. B. C. Nitze and H. A. J. Wilkens. History and details of stamps of several mills in southeastern part of the United States.
48. *Ibid.*, p. 906. T. A. Rickard. Details of stamp mills in Black Hills and at Grass Valley, Cal., with figures on costs, wear, losses and extraction.
49. *Ibid.*, Vol. XXVIII., (1898), p. 355. H. Louis. Discussion of efficiency of gravity stamp, as shown by Morison's experiments published in *N. E. Coast Inst. Eng. & Shipbuilders*, Vol. XIII., (1897).
50. *Ibid.*, Vol. XXVIII., (1898), p. 553. W. J. Loring. Description of stamps, with adjustments, capacity, power and results obtained in the Utica mills, Angels Camp, Cal.
51. *Ann. des Mines*, Series VI., Vol. XIX., (1871), p. 294. A. Henry. Description of old types of stamps with adjustments used. Comparison with rolls.
52. *Ibid.*, Series VII., Vol. VI., (1874), p. 8. P. L. Burthé. Detailed description of stamp batteries used in the United States for wet and dry crushing of silver ores and adjustments of the same. Figures on power, capacity, wear, etc., are given.
53. *Ibid.*, Series VIII., Vol. IX., (1886), p. 282. A. Thiré. Theoretical discussion of the curves of cams.
54. *Ibid.*, Vol. XI., (1887), p. 225. A. Thiré. Supplementary note to preceding reference.
55. *Austr. Inst. Min. Eng.*, Vol. V., (1898), p. 81. H. Rosales. Table of adjustments of stamps in Victoria and discussion of the running of a stamp mill.
56. *Ibid.*, p. 124. W. H. Vale. Discussion of the various adjustments to be used and arrangement of stamp mill.
57. *Ibid.*, p. 218. T. White. Improved buffer for ore feeders.
58. *Berg. u. Hütt. Jahrb.*, Vol. XXX., (1892), p. 1. J. Habermann. Compares the results obtained by graded crushing and washing on Przibram ore with those obtained by fine stamping and washing both with respect to cost and extraction of metal.
59. *Ibid.*, p. 14. J. Habermann. Results obtained by varying the different adjustments in the stamp mills at Przibram.
60. *Berg. u. Hütt. Zeit.*, Vol. XXIX., (1870), pp. 233 *et seq.* A. Reichenecker. Description of parts of California stamp battery in detail with dimensions, with notes on running and results obtained.

61. *Ibid.*, Vol. XXXI., (1872), pp. 373, 445. E. Heberli. Detailed description of the stamps in the ore dressing works at Falun in Sweden.
62. *Ibid.*, Vol. XXXII., (1873), p. 21. Meinicke. Detailed description of iron stamps at Clausthal and comparison with the old wooden stamps.
63. *Ibid.*, Vol. XL., (1881), p. 101. J. Habermann. Abstract from *Oest. Zeit.*, Vol. XXVIII., p. 325.
64. *Ibid.*, Vol. XLVI., (1887), p. 437. A. Thiré. Similar to *Ann. des Mines*, Series VIII., Vol. IX., p. 282.
65. *Ibid.*, Vol. XLVII., (1888), p. 342. Capacity of and sizes produced by stamps at Przibram taken from *Oest. Zeit.*, Vol. XXXVI., p. 229.
66. *Ibid.*, Vol. XLVIII., (1889), p. 167. No author. Same as *Zeit. B. H. u. S.*, Vol. XXXVI., p. 245.
67. *Ibid.*, Vol. L., (1891), p. 406. T. Rauft. Description of a screw tappet and a hollow guide filled with tallow used at the Mount Bischof tin mines in Tasmania.
68. *Ibid.*, Vol. LIII., (1894), p. 253. R. Helmhacker. Description of stamp running on flosh system, that is, discharging over an inclined plane with no screen. Also a description and dimensions of the parts of a California stamp with figures on capacity, power and water.
69. *Ibid.*, Vol. LVI., (1897), p. 346. B. Knochenhauer. Figures on the dimensions and adjustments of California stamps with capacity.
70. *Bull. Soc. Ind. Min.*, Series II., Vol. I., (1872), p. 97. G. Clerc. History of stamps and the practice at that time in various sections of Europe.
71. *Ibid.*, Series II., Vol. IX., (1880), p. 583. M. F. Coignet. A very complete article describing the various parts of a California battery in detail, and discussing the effects of the various adjustments on capacity, etc. Table of details from several California mills. Cost of building and cost of running stamps is given in detail.
72. *Cal. Bull.*, *No. 6*, (1895), E. B. Preston. General article on stamping.
73. *Cal. Rep.*, Vol. VI., Part II., (1886), p. 88. No author. Weights of parts for 5 and 10-stamp gold mills. Specifications for 10 and 20-stamp gold and silver mills.
74. *Ibid.*, Vol. VIII., (1888), p. 696. J. H. Hammond. Description of parts and notes on adjustments of stamps. Specifications for a 40-stamp mill.
75. *Can. Min. Rev.*, Vol. XIV., (1895), p. 84. Same as *A. I. M. E.*, Vol. XXIII., p. 545.
76. *Ibid.*, p. 182. W. S. Morse. Same as *A. I. M. E.*, Vol. XXV., p. 130.
77. *Ibid.*, Vol. XV., (1896), p. 60. F. Hille. Short discussion on the weight and height of drop of stamps.
78. *Ibid.*, p. 255. J. B. Hobson. Cost of milling in cement gravel mills.
79. *Ibid.*, Vol. XVI., (1897), p. 160. J. E. Hardman. Several notes on the construction and running of a stamp mill.
80. *Ibid.*, p. 165. H. W. DeCourteney. Discussion of properties of different metals and their applicability for the various parts of a stamp.
81. *Coll. Eng.*, Vol. XVI., (1895-6), p. 136. No author. Description of the Blanton cam.
82. *Ibid.*, Vol. XVII., (1896-7), pp. 156, 203. H. Van F. Furman. General article on stamps, giving detailed description of parts, adjustments, etc., and comparing California and Colorado practice.
83. *Ibid.*, p. 219. No author. Advantages of soap as a lubricant for stamp stems.
84. *Ibid.*, p. 356. Abstract from *A. I. M. E.*, Vol. XXV., p. 906.
85. *Coll. Guard.*, (1873), p. 345.
86. *Ibid.*, Vol. LXXIV., (1897), p. 890. H. A. Gordon. An outline of the development of the modern stamp.
87. *Engineering*, Vol. XXX., (1880), pp. 19, 85, 163, 255, 338. T. Egleston. A very complete article giving detailed description and dimensions of the various parts of the stamp mill, together with discussion of the best method of running and figures on capacity and wear.
88. *Ibid.*, Vol. XLIII., (1887), p. 128. No author. Short description of a ten-stamp battery having an iron frame.
89. *Ibid.*, Vol. XLVII., (1889), p. 226. No author. Outline of stamp mill of West Argentine Gold Co., having an iron frame battery.
90. *Ibid.*, Vol. LVI., (1893). No author. Outline and capacity of mill of Orion Co. in Transvaal.
91. *Eng. Mag.*, Vol. XI., (1896), p. 461. Discussion of development of stamps, and of the running of stamps in most economical way.
92. *Ibid.*, Vol. XV., (1898), p. 401. H. H. Webb and Pope Yeatman. Details of stamp mills in South Africa with adjustments, capacity, etc.
93. *Eng. & Min. Jour.*, Vol. IX., (1870), p. 17. No author. Description of Howland's rotary stamp mill, in which the stamps are arranged in a circle and are lifted

by a revolving cam in the form of a cylindrical surface cut so as to give a slow rise and an unhindered fall.

94. *Ibid.*, Vol. XV., (1873), pp. 193, 225. No author. Description of various forms of mortars.
95. *Ibid.*, p. 241. Wm. Main, Jr. Theoretical discussion of the effect of velocity upon efficiency of stamp blow.
96. *Ibid.*, Vol. XVII., (1874), p. 305. J. M. Adams. Same as *A. I. M. E.*, Vol. II., p. 159.
97. *Ibid.*, Vol. XXI., (1876), p. 79. No author. Discussion of losses in stamping.
98. *Ibid.*, Vol. XXIX., (1880), p. 271. R. H. Richards. Same as *A. I. M. E.*, Vol. VIII., p. 362.
99. *Ibid.*, Vol. XXXI., (1881), pp. 177, 193. H. S. Munroe. Same as *A. I. M. E.*, Vol. IX., p. 84.
100. *Ibid.*, Vol. XXXII., (1881), p. 251. F. A. Lowe. A few details of stamps at Silver Islet mill.
101. *Ibid.*, Vol. XXXIII., (1882), p. 209. No author. Description of Hendrie & Bolthoff portable five-stamp mill.
102. *Ibid.*, Vol. XXXIV., (1882), p. 296. A. N. Rogers. Same as *A. I. M. E.*, Vol. XI., p. 29.
103. *Ibid.*, Vol. XXXVI., (1883), p. 182. No author. Details of stamps in Australia giving capacity, power, costs, losses, etc., in various districts.
104. *Ibid.*, p. 213. No author. Describes Hallidie's corrugated battery screens for stamps.
105. *Ibid.*, Vol. XXXIX., (1885), p. 294. C. A. Stetefeldt. Figures on capacities and sizing tests with dry crushing stamps.
106. *Ibid.*, Vol. XLIII., (1887), p. 115. No author. Description of iron frame battery.
107. *Ibid.*, Vol. XLV., (1888), p. 397. No author. Details of stamp mill in New Mexico.
108. *Ibid.*, Vol. XLVIII., (1889), p. 140. C. H. Aaron. Figures showing the effect of different weights of stamps and different screens upon the efficiency of the stamp. Other details of construction and running.
109. *Ibid.*, Vol. LIV., (1892), pp. 81, 107. Description of Bally balanced cam which has two arms not in the same plane which lift two stamps, between which it is placed.
110. *Ibid.*, pp. 198, 222, 245. T. A. Rickard. History and details of construction and running of stamp mills in Gilpin County, Colo., with capacity, extraction, losses, etc.
111. *Ibid.*, pp. 534, 558. T. A. Rickard. Full details of stamp mills at Thames in New Zealand with comments on the process used.
112. *Ibid.*, p. 629. H. Louis. Abstract of *A. I. M. E.*, Vol. XX., p. 324.
113. *Ibid.*, p. 632. T. A. Rickard. Discussion of present condition of stamp mill.
114. *Ibid.*, Vol. LV., (1893), pp. 78, 101. T. A. Rickard. Full details of stamp mills at Clunes, Victoria, with comments on process.
115. *Ibid.*, pp. 222, 247. T. A. Rickard. Full details of stamp mills at Otago, New Zealand, with comments.
116. *Ibid.*, pp. 389, 416. T. A. Rickard. Full details of stamp mills at Ballarat, Victoria, with comparisons and comments.
117. *Ibid.*, pp. 534, 560. T. A. Rickard. Full details of stamp mills at the Ovens, Victoria, with comments.
118. *Ibid.*, Vol. LVI., (1893), p. 51. T. A. Rickard. Discussion of the end discharge mortar and screens of the Harrietville mill.
119. *Ibid.*, p. 317. T. A. Rickard. Table of shoes and dies used in different districts giving materials, weights, costs and life. Discussion of the same and of the best materials and conditions for minimum cost per ton crushed.
120. *Ibid.*, pp. 639, 663. T. A. Rickard. Full details of stamp mills in Amador County, Cal., with comments.
121. *Ibid.*, Vol. LVII., (1894), pp. 101, 128. T. A. Rickard. Table giving details of stamps, screens, capacity, water used, results obtained, etc., in six districts in Australia.
122. *Ibid.*, pp. 174, 198. T. A. Rickard. Full details of stamp mills at Bendigo, Australia, with comments.
123. *Ibid.*, p. 227. No author. Description of Blanton cam.
124. *Ibid.*, pp. 460, 486, 511. T. A. Rickard. Full details of stamp mills at Grass Valley, Cal., with comments.
125. *Ibid.*, p. 535. E. E. Olcott. Same as *A. I. M. E.*, Vol. XXIII., p. 549.
126. *Ibid.*, p. 604. T. H. Leggett. Comparative tests of plate and wire screens with respect to slimes produced and clogging.
127. *Ibid.*, Vol. LVIII., (1894), p. 33. No author. Description of Hendrie and Bolthoff's improved mortar.

128. *Ibid.*, p. 489. F. M. Drake. Details of the Wentworth Gold Fields Proprietary Co. stamps at New South Wales, Australia. Capacity. Wear. Mercury used and results obtained.
129. *Ibid.*, p. 505. No author. Comments on the Newton mortar and on the Colorado and California systems of milling.
130. *Ibid.*, p. 511. F. T. Snyder. Description and dimensions of the single discharge mortar used at the Newton mill, Colorado.
131. *Ibid.*, Vol. LIX., (1895), p. 243. T. A. Rickard. Discussion of the difference in adjustments between stamps running under the Colorado system and those running under the California system.
132. *Ibid.*, p. 392. No author. Description of Suckling's double discharge mortar for dry stamping. Mortar is made air-tight with hoods over the screens and air is forced in the top.
133. *Ibid.*, Vol. LX., (1895), pp. 221, 247. T. A. Rickard. Full details of the stamp mills in the Black Hills district, with comments.
134. *Ibid.*, pp. 371, 397. T. A. Rickard. Discussion of the adaptation of stamps to different purposes.
135. *Ibid.*, p. 415. E. B. Wilson. Discussion of the adaptation of stamps for crushing preparatory to different processes.
136. *Ibid.*, Vol. LXI., (1896), p. 541. No author. Description of a stamp battery frame built up of wood and iron for mule-back transportation.
137. *Ibid.*, p. 615. R. G. Brown. Details of stamps with wear and adjustments at Bodie, Cal.
138. *Ibid.*, Vol. LXII., (1896), p. 242. Editor. Condemnation of the use of gauge numbers for wire instead of giving the exact size in millimeters or inches. Also condemns the giving of meshes instead of the exact size of the hole.
139. *Ibid.*, p. 319. B. McDonald. Details of stamps at Gibbonsville, Idaho. Costs of milling. Results obtained.
140. *Ibid.*, p. 410. Editor. Advocating the designation of the sizes of wire in inches or millimeters, as the American Steel Manufacturers' Association has done.
141. *Ibid.*, Vol. LXVI., (1898), p. 217. F. F. Sharpless. Recommends making the ends of tappet keys of steel.
142. *Genie Civil*, Vol. XXIII., (1893), pp. 189, 201. P. F. Chalon. Short description of stamps and discussion of their application.
143. *Ibid.*, Vol. XXV., (1894), p. 164. P. Ferrand. Figures on capacity, wear and cost, showing advantages of California stamps over Brazilian at Ouro Preto, Brazil.
144. *Inst. Civ. Eng.*, Vol. CVIII., (1892), p. 97. A. H. Curtis. Short description of gravity stamps, giving the effect of the various adjustments on capacity. List of advantages and disadvantages. Description of Harvey's stamp with second set of cams for accelerating the fall, of Hope's compound battery with two rows of stamps in one mortar, and of Huntington oscillating stamp, in which a heavy piece like an inverted U is made to strike first on one prong and then on the other. Different members discuss quality of crushing, etc.
145. *Ibid.*, Vol. CXIV., (1892), p. 136. M. B. Jamieson and J. Howell. Weight and drop of stamps at Broken Hill, New South Wales.
146. *Iron*, Vol. II., (1873), p. 552. No author. Description of Walker's stamp, which has double cam, lifting on both sides at once.
147. *Ibid.*, Vol. XXXVI., (1890), p. 445. No author. Description of Harvey's high speed stamp, which has a set of secondary cams to accelerate the fall of the stamps.
148. *Kamtener Zeit.*, Vol. X., p. 219.
149. *Min. Ind.*, Vol. III., (1894), p. 309. L. Janin, Jr. The various parts and adjustments of a battery are considered in full detail. Various directions for running the mill are given.
150. *Ibid.*, Vol. IV., (1895), p. 319. T. A. Rickard. Discussion of stamp milling in different districts of the United States, Australia and New Zealand, including variations in costs, wear, weight of stamps, height of drop, depth of discharge, screens, etc.
151. *Min. Jour.*, Vol. XLI., (1871), p. 706. No author. Advocating an air exhaust in dry stamping.
152. *Ibid.*, Vol. XLII., (1872), p. 159. No author. Describes a mortar with discharge on all four sides.
153. *Ibid.*, p. 662. Instead of a fine screen, a coarse screen is recommended with a fine limiting trommel separate from the stamp.
154. *Ibid.*, p. 687. Describes a new stamp.
155. *Ibid.*, p. 997. No author. Describes Walker's stamp, which has double cam lifting on both sides of tappet at once.

156. *Ibid.*, Vol. XLIII., (1873), p. 1060. No author. Description of method to prevent sliming by washing the fine ore off the die.
157. *Ibid.*, Vol. XLIV., (1874), p. 1049. J. T. Rodda. Description of a new form of stamp.
158. *Min. Soc. N. Scotia*, Vol. I., Part 2, (1892), p. 34. J. E. Hardman. Description of Oldham and Waverly mills, giving frame, mortar block, mortar, details of stamps, capacity and costs.
159. Omitted.
160. *Min. & Sci. Press*, Vol. XLIV., (1882), June 24. M. Atwood. Result of microscopic examination of pulp.
161. *Ibid.*, Vol. XLIX., (1884), October 4. Description of an improved battery screen which is made double.
162. *Ibid.*, Vol. LII., (1886), p. 157. No author. A few remarks on the height of drop, the height of discharge, the weights and proportions of stamps.
163. *Ibid.*, p. 238. No author. Results of tests on light and heavy stamps and on single and double discharge.
164. *Ibid.*, p. 421. No author. Weight and height of drop of stamps and sizes of screens in mills crushing cement gravel.
165. *Ibid.*, Vol. LIII., (1886), p. 181. No author. Costs of milling by stamps at several mines is compared with the cost by Huntington mill.
166. *Ibid.*, Vol. LV., (1888), p. 18. W. C. Stiles. An article in which the disadvantages of stamps are set forth, which the author claims to be overcome by the Stiles pulverizer.
167. *Ibid.*, p. 246. No author. Discussion of the amount of attrition produced by stamps.
168. *Ibid.*, p. 325. No author. Application of stamps to soft ores compared to that of roller mills.
169. *Ibid.*, p. 425. No author. Figures showing loss of time in running stamps.
170. *Ibid.*, Vol. LIX., (1889), p. 89. W. A. Newcum. Details of stamps and dimensions of frames in the Amador mill.
171. *Ibid.*, p. 128. No author. Details of stamps, wear, cost, and results obtained at Smyth mine in Angels, Cal.
172. *Ibid.*, Vol. LX., (1890), p. 169. H. O. Hofman. Description of Homestake and Caledonia mortars taken from *A. I. M. E.*, Vol. XVII., p. 498.
173. *Ibid.*, Vol. LXI., (1890), p. 158. No author. A device for hanging up stamps.
174. *Ibid.*, Vol. LXII., (1891), pp. 226, 274, 354. A. B. Paul and others. Discussion of loss of gold by action of stamps. Results of tests.
175. *Ibid.*, Vol. LXVI., (1893), p. 84. No author. Description of Bally cam. See *E. & M. J.*, Vol. LIV., pp. 81, 107.
176. *Ibid.*, p. 386. No author. Details of stamps in Standard Consolidated mine of Bodie, Cal., with capacity, cost, and results obtained.
177. *Ibid.*, Vol. LXVII., (1893), p. 83. No author. Weight, and height of drop, size of screen, capacity, and cost in a mill stamping cement gravel.
178. *Ibid.*, p. 133. J. Thomas. Details of California stamps used in Cornwall, and their advantages over Cornish stamps in capacity and coal consumed.
179. *Ibid.*, p. 193. No author. Description of ball-bearing guides.
180. *Ibid.*, pp. 214, 229. T. A. Rickard. Same as *A. I. M. E.*, Vol. XXIII., p. 137.
181. *Ibid.*, p. 262. C. P. Stanford. Story of the first California rotating stamp mill with outline of later improvements.
182. *Ibid.*, p. 405. No author. Note of an old Grass Valley mill, the second constructed in California.
183. *Ibid.*, Vol. LXVIII., (1894), p. 133. Same as *A. I. M. E.*, Vol. XXIII., p. 545.
184. *Ibid.*, p. 145. No author. Description of iron frame battery made by Union Iron Works.
185. *Ibid.*, p. 209. No author. Comparative results obtained from California and Colorado systems of milling.
186. *Ibid.*, p. 260. A. B. Paul. Discussion of California and Colorado systems, including weights of stamps and losses.
187. *Ibid.*, pp. 278, 294, 309. Same as *A. I. M. E.*, Vol. XXIII, p. 545.
188. *Ibid.*, p. 325. No author. Description of Blanton cam.
189. *Ibid.*, Vol. LXIX., (1894), p. 215. No author. Description of mortar made by E. P. Allis Co. for the Morning mill. Single discharge with front and back plates.
190. *Ibid.*, p. 241. No author. Details of stamps in Eureka Hill mill.
191. *Ibid.*, Vol. LXX., (1895), p. 376. F. S. Pheby. Discussion of various forms of battery frames.
192. *Ibid.*, Vol. LXXI., (1895), pp. 320 *et seq.* E. B. Preston. Same as *Cal. Bull., No. 6.*
193. *Ibid.*, p. 357. No author. Table showing variation of sizes of needle gauge for screen holes, as given by different authorities.

194. *Ibid.*, Vol. LXXII., (1896), p. 186. No author. Description of Reliance self-tightening cam, which is very similar to the Blanton cam.
195. *Ibid.*, Vol. LXXIII., (1896), p. 378. C. C. Longridge. Discussion of probable future development of stamps.
196. *Ibid.*, p. 443. No author. Description of the triple discharge two-stamp mill made by Joshua Hendy Machine Works.
197. *Ibid.*, Vol. LXXIV, (1897), p. 5. J. W. Abbott. Discussion of best practice in running a stamp mill in regard to height of drop, height of discharge, material of shoes and dies, etc.
198. *Ibid.*, p. 49. Wascott. Comparative capacity of slow and rapid drop stamps in Gilpin County, Colo., and remarks on the tendency toward the latter.
199. *Ibid.*, p. 153. Newell & Newell. Advantages of fast over slow drop stamps in capacity and amalgamation at the Penn mill, Gilpin County, Colo.
200. *Ibid.*, p. 305. R. A. Parker. Description of a false shoe which may be put in to restore the weight of the stamp as the true shoe wears. It has a shank above to fit into the boss and a socket below for the shank of the true shoe.
201. *Ibid.*, Vol. LXXV., (1897), p. 45. No author. Illustration and advantages of different forms of battery frames.
202. *Ibid.*, p. 505. No author. Description and dimensions of a concrete mortar block at Oroville, Cal.
203. *Ibid.*, Vol. LXXVII., (1898), p. 160. No author. Description of the Globe iron guide for stamp stems.
204. *N. E. Coast Inst. Eng. & Shipbuilders*, Vol. XIII., April 30, 1897. D. B. Morison. Description of stamp battery. Discussion of indicator cards taken to show velocities of stamp.
205. *North Eng. Inst. Min. & Mech. Eng.*, Vol. XLIII., (1893-4), p. 3. A. G. Charleton. Details of stamps in various parts of the world.
206. *Oest. Zeit.*, Vol. XXII., (1874), p. 385. J. Habermann. Details, capacity, etc., of stamps at Przibram.
207. *Ibid.*, Vol. XXVIII., (1880), pp. 325, 335. J. Habermann. Results of comparative tests at Przibram on iron and wooden stamps.
208. *Ibid.*, Vol. XXXVI., (1888), p. 168. L. Buchal. A few details of stamps at Przibram and sizing tests of pulp.
209. *Ibid.*, p. 229. K. von Reytt. Result of experiments made to determine the efficiency of stamps expressed in terms of increase of surface of product.
210. *Ibid.*, p. 456. C. Barth. A few figures comparing stamps and rolls.
211. *Ibid.*, p. 507. L. Buchal. Description of rope driver for stamps at Przibram and advantages over belt drivers.
212. *Ibid.*, Vol. XXXVII., (1889), pp. 553, 569, 578. Translation of article by John H. Hammond in *Cal. Rep.*, Vol. VIII., p. 696.
213. *Ibid.*, Vol. XXXIX., (1891), p. 519. A. Haussner. Mathematical discussion of the form of curves for cams used for lifting.
214. *Ibid.*, Vol. XLII., (1894), p. 485. J. von Hauer. Description of the Blanton cam.
215. *Prod. Gold and Silver in U. S.*, (1880), p. 350. W. A. Skidmore. Description of Huntington's oscillating stamp mill.
216. *Ibid.*, p. 367. J. Richards. Discussion of advantages of stamps over rolls and disintegrators. Wet *versus* dry stamping.
217. *Ibid.*, (1881), p. 563. C. G. Yale. Description of Huntington oscillating stamp mill.
218. *Ibid.*, p. 592. J. Richards. Stamps are compared with other crushers.
219. *Ibid.*, (1882), p. 709. (From *Min. Jour.*) Description of stamps invented by C. J. Appleby.
220. *Ibid.*, p. 737. (From *Min. & Sci. Press.*) Figures on the amount of water used in battery.
221. *Ibid.*, (1883), p. 738. C. A. Stetefeldt. Similar to *A. I. M. E.*, Vol. XIII., p. 114.
222. *Raymond's Rep.*, (1870), p. 657. W. P. Blake. Detailed description of the parts of a stamp battery and of the battery as a whole. Howland's stamp battery (see *E. & M. J.*, Vol. IX., p. 17). Details of several stamp mills in California, Australia and Brazil. Description of German overflow battery and Rittinger stay battery.
223. *Ibid.*, (1871), p. 339. A. Reichenecker. Same as *B. & H. Z.*, Vol. XXIX., p. 233.
224. *Ibid.*, p. 380. R. W. Raymond. Same as *A. I. M. E.*, Vol. I., p. 40.
225. *Ibid.*, (1872), p. 32. R. W. Raymond. Description of Crocker's stamps which act like a triphammer.
226. *Ibid.*, (1873), p. 319. G. F. Deetken. Detailed description of the various parts of a stamp battery with the method of operating and costs.
227. *Ibid.*, p. 345. W. Main, Jr. Discussion of the influence of the velocity of impact on the effective duty of stamps.

228. *Ibid.*, p. 475. R. W. Raymond. Description of mortars used in 1871.
229. *Ibid.*, (1874), p. 408. J. M. Adams. Same as *A. I. M. E.*, Vol. II., p. 159.
230. *Ibid.*, (1876), p. 419. S. R. Krom. Comparison of stamps and rolls with respect to the slimes produced and the wear and tear.
231. *Rev. des Mines*, Vol. XXI., (1893), p. 287. L. Demaret. Detailed description of old Cornish stamps and modern revolving stamps used in Cornwall. Description of flosh system of discharge and of high speed stamps, using secondary cam to accelerate the fall.
232. *Sch. Mines Quart.*, Vol. V., (1883-84), p. 359. F. D. Browning. A few details of stamps, wear, and cost at the Providence mill, Nevada City, Cal.
233. *Tenth U. S. Census*, Vol. XIII., (1880), p. 247. General article giving details of stamps throughout the United States.
234. *Zeit. Berg. Hütt. u. Salinenwesen*, Vol. XXV., (1877), p. 242. No author. Results of experiments at Clausthal on stems of cast iron, wrought iron, cast steel, and Bessemer steel. Also the effect of weight of stamps on capacity.
235. *Ibid.*, Vol. XXVI., (1878), p. 57. Koch. Detailed description of stamps used in Comstock mills.
236. *Ibid.*, p. 139. E. Althans. General description of German and California stamps, with special reference to designs of cam curves. Figures are given on capacity, water and wear.
237. *Ibid.*, Vol. XXVIII., (1880), p. 210. C. Mosler. Short description of stamps in Quincy mill.
238. *Ibid.*, Vol. XXIX., (1881), p. 270. No author. Advantage of round over four-sided stamps.
239. *Ibid.*, Vol. XXXVI., (1888), p. 245. No author. A few details of a stamp mill at Tarnowitz.

CHAPTER VI.

PULVERIZERS OTHER THAN GRAVITY STAMPS.

§ 202. INTRODUCTORY.—In treating this subject, the author has described in the main, machines that are received as standard, but he has also added some of those that are not so received. The former are given to show present practice, the latter as information to inventors and others desiring to know what such and such a machine is like. The line is drawn in nearly every case at machines which have been adopted for a longer or shorter time in some mill. The Patent Office records contain descriptions of many other machines not included in this chapter.

§ 203. PURPOSE.—There are two chief purposes for which these machines have been designed: (*a*), to replace gravity stamps for crushing gold ores or jig middlings and (*b*), for grinding soft substances, as phosphates, cement, gypsum, talc, etc.

In comparing the different fine pulverizers there are several qualities that need to be considered; they are: Capacity, cost of crushing, the brightening of gold preparatory to amalgamation, ability to act as an amalgamator and tendency to form slimes. The gravity stamps appear to stand at the head of the list for all cases except where the production of large quantities of slimes must be avoided. Machines acting on the roller principle, by pressure mainly, make less slimes than the others, particularly if they have a free discharge.

The distribution of the machines in the gold quartz mills of California for the years 1895 and 1896 was as follows:* Gravity stamps were used in 551 establishments; Arrastras, in 108; Huntington mills, in 43; roller quartz mills, in 4; Tustin pulverizers, in 4; Bryan mills, in 3; Cannon ball mills (ball mills), in 3; Griffin mills, in 3; Dodge pulverizers, in 2 and Kinkead mills, in 2; total, 723. This list indicates how far, in the State of California, fine pulverizers have succeeded in replacing gravity stamps.

For grinding softer materials, as phosphates, cement clinker, etc., the fine pulverizers are standard, the gravity stamps not being used for these purposes.

§ 204. CLASSIFICATION.—The machines have been arranged in groups or classes (see Table 136), according to their mode of attack upon the rock, of which there are four chief principles: (1) abrading or true grinding, (2) pressure, (3) blow upon an anvil, (4) blow in space; and also according to their construction.

In this classification, under the column headed "Run," five states are distinguished: (1) "Dry," that is, dry or only very slightly moist, as mine ore; (2) "Thick pulp," that is, pulp that will adhere to a stick, as in amalgamating pans; (3) "Thin pulp," that is, liquid pulp like cream, which runs readily, as in an arrastra; (4) "In water," that is, as in a stamp mill; (5) "With water," that is, with a stream of water, as in rolls.

* Compiled from Cal. Rep., Vol. XIII.

TABLE 136.—CLASSIFICATION OF PULVERIZERS.

Machines marked with an asterisk, thus,* are described later in the text.

Abbreviations.—Cont.=continuous; In.=inch; Int.=intermittent; L.=large size; qtz.=quartz; S.=small size.

Machine.	Principle.	Material of Crushing Surface.	Run.	Continuous or Intermittent.	Capacity per 24 Hours. Tons.	Horse Power Used.	Uses Designed for.
			CLASS I.				
Arrastra.*	Horizontal surfaces grinding concentrically. Vertical driving shaft.	Usually stone.	Thin pulp.	Int. Sometimes Cont.	2 to 6 of ore	2-6	Fine grinding and amalgamating of gold and silver ores from ¾ inch to 100 mesh.
Howland mill No. 2.	Same as preceding, with addition of vertical surfaces grinding by centrifugal force.	Iron.	In water.	Cont.	30 of quartz	40	Substitute for stamp mill.
Amalgamating pan.*	Same as Arrastra.....	Iron.	Thick pulp. Sometimes thin pulp.	Int. Sometimes Cont.	3 to 6 of ore	3-10	Fine grinding and amalgamating, usually for silver ores, from 40 to 100 mesh.
Clean up pan.*	Same as Arrastra.....	Iron.	Thick pulp.	"	.....	.....	Fine grinder and amalgamator for various residues from 40 mesh to 100 mesh.
			CLASS II.				
Grist mill or Buhrstone mill.*	Same as Arrastra.....	Stone.	Any state, but usually dry.	Cont.	9 of talc.	20	Fine grinding of soft material, as grain, soft rock, etc., from ¼ inch to 100 mesh.
Rock emery mill.*	Same as Arrastra.....	(a)	"	"	24 to 48 of rock.	20	Fine grinding on little harder material than preceding.
Fröbel's improved fine grinding mill.	Similar to preceding, except that grinding surface is shaped like the surface of a much flattened cone.	(b)	"	"	20 of galena ore.	.....	Grinding soft ores from ⅛ in. to 20 mesh.
Carey portable pulverizing mill.	Same as Buhrstone, except that upper grinder is suspended by universal joint.	Buhrstone.	"	"	.....	.....	Same as preceding.
Kolshorn & Strecker's grinder.	Deep stationary pan with independent revolving corrugated bottom. Weight of pan full of ore causes grinding.	Iron.	Dry.	"	.....	.....	Grinding cement.

(a) Combination of emery, cement and buhrstone. (b) Cast iron with furrows of wood.

			CLASS III.				
Cumming's ore granulating mill.*	Vertical concentric grinding surfaces. Horizontal driving shaft.	Iron.	Any state.	Cont.	480 of cement.	50	Grinding rock from 1 inch to $\frac{1}{16}$ inch.
Vertical rock emery* (a).	Same as preceding.....	(b)	Any state.	"	4 to 60 of rock.	8-25	Grinds moderately hard rock from ¼ in. to 60 mesh.

(a) This mill is described in the text with the Rock emery mill under Class II. (b) Emery, cement and buhrstone.

			CLASS IV.				
"Kegelmühle" or cone mill*	Concentric grinding surfaces nearly vertical. Vertical driving shaft.	Iron.	Any state.	Cont.	165 of coal.	8	Grinding soft substances, as coal, from 6 in. to ⅛ in.
Sample grinder.*	Same as preceding.....	Iron.	Usually dry	"	.....	8	Fine grinding of ore from ⅛ in. to 60 mesh.

TABLE 136.—CLASSIFICATION OF PULVERIZERS.—*Continued.*

Machines marked with an asterisk, thus,* are described later in the text.

Machine.	Principle.	Material of Crushing Surface.	Run.	Continuous or Intermittent.	Capacity per 24 Hours. Tons.	Horse Power Used.	Uses Designed for.
			CLASS V.				
Nicholas pulverizer.	Cylinder with horizontal axis, which grinds by revolving in lower half of a stationary cylindrical trough.	Iron.	In water.	Cont.	6 of tin ore.	1¼	In Cornwall, for fine grinding of middlings from 50 to 100 mesh.
			CLASS VI.				
Heberli mill.*	Vertical eccentric grinding surfaces. Horizontal shaft.	Iron.	Usually with water	Cont.	4 to 13 of middlings	2½-8	Grinding middlings from $\frac{1}{16}$ inch to $\frac{1}{32}$ inch.
			CLASS VII.				
Bogardus eccentric mill.*	Horizontal eccentric grinding surfaces. Vertical shaft.	Iron.	Any state.	Cont.	7 to 17 of soft substances.	3-8	Grinding soft substances, as fertilizer, bones, etc., from ⅛ in. to 60 mesh.
Cunnack's pulverizer.	Horizontal eccentric grinding surfaces, one of which is a stationary pan. Vertical shaft.	Iron.	In water.	"	7 of tin ore	1½	Fine grinding middlings from 50 to 100 mesh.
Dingey mill....	Like preceding, except pan slowly revolves.	Iron.	In water.	"	13 of middlings.	8-13	Grinding middlings from $\frac{1}{16}$ in. to $\frac{1}{32}$ in.
Butter's patent grinding and amalgamating pan.	Differs from Cunnack's, in that pan revolves fast, driving the other discs by friction.	Iron.	In water.	"	12 of quartz	.....	Substitute for stamp mill.
Neuerberg's wet mill.	Similar to Bogardus.....	Iron.	With water	"	.....	.....	Similar to Bogardus.
			CLASS VIII.				
Brückner ball mill.*	Cylinder revolving on horizontal axis, containing balls which act by gravity.	Iron.	Dry or with water.	Cont.	¼ to 21	(b)6-8	Fine grinding of soft materials, as cements, clays, etc., from 1½ in. to 100 mesh.
Grüson ball mill.*	Same as preceding.....	Iron.	Dry or with water.	"	(a) 1 to 12	¼-11	Same as preceding.
Jenisch ball mill.*	Same as preceding.....	Iron.	Dry or with water.	"	6 to 32 of ore	2-14	Same as preceding.
Other ball mills and tube mills made by various firms.	Same as preceding.....	Iron.	Dry or with water.	"	.....	.....	Same as preceding.
Dodge improved pulverizer.*	Same as preceding.....	Iron and quartz.	Dry or with water.	"	10 to 60 of ore.	5-15	Substitute for stamp mill.
Lowe's mill....	Same as preceding.....	Iron.	With water	"	14 to 18 of ore.	10	Same as preceding.
Michell & Tregoning pulverizer.	Same as preceding, except uses scrap iron instead of balls.	Iron.	In water.	"	5 to 6 of tin ore.	.....	Grinding middlings from 50 mesh to 100 mesh.
Bartle pulverizer.	Same as preceding.....	Iron.	In water.	"	6 of tin ore.	3	Same as preceding.

(a) Of chrome iron ore. (b) For 8-21 tons capacity.

			CLASS IX.				
Tustin's rotating pulverizing mill.*	Similar to Grüson, but uses rollers instead of balls.	Iron.	Dry or with water.	Cont.	4 to 24 of ore	1½-4½	Substitute for stamp mill.
Niagara crusher and pulverizer.	Similar to Tustin, except roller is weighted by a spring.	Iron.	Dry.	"	24 to 48 of ore.	6-12	Fine crushing of ore from 1 inch to 100 mesh.

TABLE 136.—CLASSIFICATION OF PULVERIZERS.—*Continued.*

Machines marked with an asterisk, thus,* are described later in the text.

Machine.	Principle.	Material of Crushing Surface.	Run.	Continuous or Intermittent.	Capacity per 24 Hours. Tons.	Horse Power Used.	Uses Designed for.
			CLASS X.				
Clean up barrel.*	Cylinder revolving on horizontal axis containing balls which act by gravity.	Iron.	In water.	Int.	.....	.....	Grinding battery residues, etc., from ¼ inch to 60 mesh.
Alsing cylinder.*	Same as preceding.....	(a)	Dry.	"	2½ to 6½ of talc.	20	Fine grinding of talc, etc., from 30 mesh to powder.

(a) Flint pebbles. Porcelain lining.

			CLASS XI.				
Frisbee Lucop mill.*	Cylinder with die ring, having horizontal axis, in which revolve rollers driven by arms and crushing by centrifugal force.	Iron.	Dry or with water.	Cont.	12 to 24 of quartz.	8-18	Grinding phosphate, etc., to 60 mesh and as substitute for stamp mill on gold ores.
Waring pulverator.	Similar to preceding, except that it uses balls instead of rollers.	Iron.	Same.	"	.....	.....	Grinds ores from 1 in. to 60 mesh.
Planet pulverizing mill.	Similar to preceding, except ball is driven by two revolving discs.	Iron.	Same.	"	36 of phosphate.	10	Same as preceding
Lion mill.....	Similar to preceding....	Iron.	Same.	"	48 to 72	.....	Same as preceding
Cyclops mill...	Similar to preceding....	Iron.	With water	"	5-42 of qtz.	3-16	Same as preceding
Thompson's pulverizer.	Similar to preceding....	Iron.	Dry or with water.	"	15-60 of ore	4-10	Same as preceding
			CLASS XII.				
Griffin centrifugal stamp mill.*	Similar to Frisbee Lucop except rollers are corrugated and, hence, strike a blow.	Iron.	Dry or with water.	Cont.	180 of copper matte	30	Grinding ore from 1½ in. to 1/16 in. and finer.
			CLASS XIII.				
American ball pulverizer.	Horizontal stationary pan, around which balls are driven by revolving cover.	Iron.	Dry or in water.	Cont.	24 to 72 of quartz.	4-40	Grinding ores from ½ in. to 60 mesh.
Lamberton mill	Same as preceding.....	Iron.	Same.	"	.....	.....	Same as preceding
Morey & Sperry pulverizer.	Similar to preceding, except balls are driven by under disc.	Iron.	In water.	"	24 to 36 of quartz.	12-15	Same as preceding
Crawford mill.	Same as preceding.....	Iron.	Same.	"	10 of quartz	12	Same as preceding
Pfeiffer's horizontal ball mill.	Similar to preceding, except balls are driven by radial arms.	Iron.	Dry or in water.	"	7 of cement	10-12	Same as preceding
Morel & Hall's ball mill.	Same as preceding.....	Iron.	Same.	"	.....	.....	Same as preceding
			CLASS XIV.				
Jordan's centrifugal grinder and amalgamator	Pan keyed to a slightly inclined shaft, around which balls roll, due to rotation of shaft.	Iron.	In water.	Cont.	.....	.....	Same as preceding
Kinkead's ball mill.	Similar to preceding, except that the shaft gyrates at its foot.	Iron.	Same.	"	.....	.....	Same as preceding

TABLE 136.—CLASSIFICATION OF PULVERIZERS.—*Continued.*

Machines marked with an asterisk, thus,* are described later in the text.

Machine.	Principle.	Material of Crushing Surface.	Run.	Continuous or Intermittent.	Capacity per 24 Hours. Tons.	Horse Power Used.	Uses Designed for.
			CLASS XV.				
Edge runner*..	Cylindrical rollers revolving on horizontal axis and gyrating in a pan.	Iron. Sometimes stone.	Dry or in water.	Cont. Sometimes Int.	14 to 18 of ore. 90 of quartzite.	3-5	Usually for fine grinding ⅛ in. to 40 mesh.
Bryan roller quartz mill.*	Same as preceding.....	Iron.	In water.	Cont.	12 to 35 of ore.	5-10	Substitute for stamp mill.
Langley's improved dry crusher.*	Same as preceding.....	Iron.	Same.	"	72 of ore.	8-10	Crushing ores from 1½ in. to 75 mesh.
Merrall's mill..	Same as preceding.....	Iron.	Same.	"	54 of ore.	.....	Crushing ore from ⅛ in. to 60 mesh.
Wiswell electric ore pulverizer.	Same as preceding.....	Iron.	Same.	"	12 to 48 of ore.	.....	Substitute for stamp mill.
Hanctin's mill.	Same as preceding.....	Iron.	Dry.	"	52 of ceme't	5	For grinding cement.
Wood's mill...	Same as preceding.....	Iron.	In water.	"	.....	.....	For grinding ore from ⅛ inch to 60 mesh.
Compound edge stone.	Same as preceding.....	Iron.	Dry or with water.	"	74 to 96 of cement.	35-40	Same as preceding
			CLASS XVI.				
Schranz mill*..	Conical rollers revolving on fixed axis nearly horizontal with revolving disc beneath.	Iron.	With water	Cont.	38 of middlings.	3-3½	Crushing middlings from 15 mm. to 2 mm.
			CLASS XVII.				
Kinkead mill*..	Pan containing muller keyed to gyrating shaft.	Iron.	In water.	Cont.	15 of ore.	2	For gold ores and middlings, from ⅛ in. to 40 mesh.
Lightner mill..	Same as preceding.....	Iron.	Same.	"	.....	.....	Same as preceding
			CLASS XVIII.				
Huntington centrifugal roller mill.*	Die ring with vertical axis, inside of which are rollers which revolve around central shaft and rotate on vertical axes by friction and crush by centrifugal force.	Iron.	In water.	Cont.	12 to 25 of ore.	4-8	Substitute for stamp mill and for middlings crusher.
Howland mill No. 1.	Similar to preceding, except that rollers are driven by a revolving under disc.	Iron.	Same.	"	12 to 24 of ore.	12-15	Substitute for stamp mill.
Narod pulverizer.*	Similar to Huntington...	Iron.	Dry or in water.	"	24 to 96 of ore.	15-20	Same as preceding
Propfe mill....	Similar to Huntington, but has rollers on two levels.	Iron.	Dry.	"	10 to 15 of coal.	3-9	For grinding coal to 40 mesh.
Friedeberg mill	Similar to Huntington...	Iron.	Same.	"	5-8 of coal.	4-5	Same as preceding
Tregoning pulverizer.	Similar to Huntington, except rollers are corrugated and strike a blow.	Iron.	In water.	"	3 of tin ore.	1¼	For fine grinding of ore.
			CLASS XIX.				
Griffin roller mill.*	Similar to Huntington, except that roller is rotated by a pulley.	Iron.	Dry or in water.	Cont.	36 to 60 of quartz.	15-25	Substitute for stamp mill.

TABLE 136.—CLASSIFICATION OF PULVERIZERS.—*Concluded.*

Machines marked with an asterisk, thus,* are described later in the text.

Machine.	Principle.	Material of Crushing Surface.	Run.	Continuous or Intermittent.	Capacity per 24 Hours. Tons.	Horse Power Used.	Uses Designed for.
			CLASS XX.				
Carr disintegrator.* Brink & Hübner disintegrator.* Stedman's disint'gratr*	Impact machine having two horizontal shafts and two sets of beaters revolving in opposite directions in a chamber.	Iron.	Dry.	Cont.	*L.* 175 to 500 of coal. *S.* 30 of middlings.	35–125 6–7	For grinding soft substances, as coal, to $\frac{1}{16}$ inch; also for middlings from 9 to 4 mm.
Sturtevant mill.*	Same as preceding.....	Iron.	Dry.	"	18 to 700 of ore.	20–75	Crushing ore from 4 in. to 20 mesh.
Cyclone pulverizer.*	Same as preceding.....	Iron.	Dry.	"	5 to 12 of ore.	9½–17	Fine grindi'g of soft minerals from ½ in. to 100 mesh.
Leviathan pulverizer.	Same as preceding.....	Iron.	Dry.	"	.....	.....	Same as preceding
Meihe's pulverizer.	Same as preceding.....	Iron.	Dry.	"	.....	.....	Same as preceding
Jordan's pulverizer.	Same as preceding.....	Iron.	Dry.	"	.....	.....	Same as preceding
			CLASS XXI.				
Whelpley & Storer pulverizer.*	Impact machine with one horizontal shaft and several sets of beaters revolving in a chamber.	Iron.	Dry.	Cont.	18 of ore.	15	Grinding ores from ½ in. to 100 mesh.
Raymond automatic pulverizer.	Same as preceding.....	Iron.	Dry.	"	2½ to 20	.....	Grinding soft materials to powder.
Walker pulverizer.	Same as preceding, with but one set of beaters.	Iron.	Dry.	"	25 of quartz	.....	Grinding from ½ in. to 100 mesh.
Ryerson pulverizer.	Same as preceding.....	Iron.	Dry.	"	7,200 bushels wheat.	.....	Grinding soft material, as wheat, to flour.
			CLASS XXII.				
"Schleudermühle."	Impact machine with horizontal disc revolving rapidly on vertical shaft. Throws ore radially outward.	Iron.	Dry.	Cont.	14 of ore.	5	Grinding ores from ¼ in. to 12 mesh.
Vapart disintegrator.*	Same as preceding.....	Iron.	Dry.	"	10 to 25 of soft ores.	4–18	Same as preceding
Griffin pulverizer.	Same as preceding.....	Iron.	Dry.	"	24 to 72 of ore.	15–20	Same as preceding
Whelpley & Storer whirling table.	Same as preceding.....	Iron.	Dry.	"	200 of ore.	12½	Grinds ore from 4 inches to ½ inch.
Progressive pulverizer.	Same as preceding.....	Iron.	Dry.	"	.....	.....	Grinds ore from ½ in. to 100 mesh.
"Bolzenmühle."	Same as preceding.....	Iron.	Dry.	"	.....	.....	Grinds ore from ½ in. to 100 mesh.
Magic crusher.	Impact machine, where ore is struck by projections on rapidly revolving horizontal disc.	Iron.	Dry.	"	.....	.....	Friable material, from 12 inch to sand.
			CLASS XXIII.				
Pneumatic pulverizer.	Impact machine, in which two streams of ore meet in a chamber.	Ore.	Dry.	Cont.	7 to 10 of ore.	(*a*)	Crushes ore from ¼ in. to 100 mesh

(*a*) Boiler burns 0.29 to 0.42 tons of coal to crush 7 to 10 tons of ore.

Digitized by Google

Classes I. to V. are concentric in their action and act upon the true grinding principle only. Classes I. and II. have vertical axes; III. and IV. have horizontal. The former are used for very fine grinding and are able to do such work because the particles cannot tumble away from the surfaces as soon as the first break takes place. The latter do not grind so finely because the particles can drop out when partly broken. The wear, when hard rock is ground, is high, and since they are employed for very fine grinding their capacity per horse power is necessarily low. These, as well as the other machines that crush by grinding, if run dry, have greater tendency to heat than the machines which crush by pressure.

Classes VI. and VII. have eccentric grinding surfaces and they, therefore, have no tendency to wear in grooves, which is an advantage. The remarks upon concentric grinders in other respects are equally applicable here.

Class VIII. includes the true ball mills and they act by pressure, by grinding and by blows.

Class IX. includes machines which resemble those of Class VIII., but they act by pressure only. The effect of the heavy rollers with free discharge, is to decrease wear and the tendency to make slimes.

Class X. represents the parent form of ball mills and the intermittent method of action makes the machines of this class extremely fine grinders. They are simple and are good amalgamators and are used for very fine grinding where small capacity is not objectionable.

Class XI. includes roller and ball mills using pressure mainly, with or without grinding. Class XII. acts by blow only. Class XIII. acts by pressure, and to a less extent by grinding. Classes XI., XII. and XIII. have not met with wide adoption on account of complicated parts.

Class XIV. uses both pressure and grinding. The inclined shaft is a disadvantage.

Class XV. acts mainly by grinding and to a less extent by pressure. Class XVI. is like class XV. in action except that the conical rollers enable it to act wholly by pressure. Classes XV. and XVI. have been very successful for moderately fine work.

Class XVII. acts by pressure only on the fine grains, but it introduces a slight grinding action while breaking the coarse lumps.

Classes XVIII. and XIX. are the vertical roller mills and they act almost wholly by pressure. They have been the chief rivals of the California stamp mill.

Classes XX., XXI., XXII. and XXIII. all break the rock by striking a blow in space. They have found favor only on soft material because of the high cost of power and wear when crushing hard substances. Several of these mills are used for very fine grinding.

Arrastra or Drag-stone Mill.

§ 205.—This mill consists of a circular pavement from 6 to 20 feet in diameter with a retaining wall around it and a step in the center. Upon the step stands a vertical revolving spindle or shaft, and from the spindle extend horizontal arms to which large boulders, called drag-stones, are attached by chains. The boulders are dragged around the circle by the arms and crush the ore by a true grinding action.

The arms number from two to eight, usually four. The drag-stones vary form two to twelve, commonly four; they weigh from 80 to 2,000 pounds, average about 300 pounds. Holes are drilled in the stones and plugged with dry wood and the eye rings are driven into these plugs. They are placed so that

the stone shall slide on its largest plane surface and forward of the center of gravity so that the front edge of the stone may be lifted so as to ride over the coarsest of the ore during the early stage of grinding.

To prevent leakage of quicksilver the pavement is built upon a clay or concrete foundation which is always wider than the pavement. The latter is about 1 foot thick of granite, basalt, or flinty quartz, a rough grained rock being preferred. The joints are filled with fine tailings, or better, with cement. The retaining wall, 2 to 4 feet high, is made of stones laid in cement, of wooden staves bound with iron hoops, or is merely a clay bank. It has a gate or a series of plug holes for discharging the pulp and sometimes screen discharges for continuous work.

The speed is 4 to 18 revolutions per minute, usually 10 to 14 for power arrastras. Small arrastras are driven by a horse or mule atttached to an extension of one of the arms, the animal walking around the circle. Large arrastras are driven by a horizontal water wheel, suspended from cross arms separate from the dragging arms and extending outside the retaining wall, or they are driven by a shaft with beveled gears. One long shaft may in this way connect several arrastras with a single driving engine.

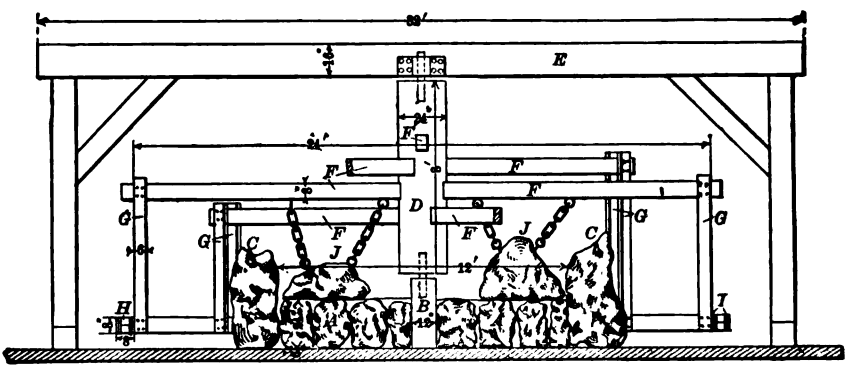

FIG. 158.—SECTION OF ARRASTRA AT MILL 81.

It is used as a fine grinder and amalgamator with both gold and silver ores, and is fed with material seldom above ¾ inch in diameter, often much below. It is used where cheapness, both of installation and of running, is essential and at the same time, small capacity is not objectionable, for example, in regions remote from supplies. It is often used for re-treating tailings of gold mills, chiefly by lessees.

At Guanaxuato, Mexico, mule power arrastras 12 feet in diameter, each treat 600 to 1,100 pounds of silver and gold ore per charge, taking 24 hours and using 230 to 299 gallons of water. At Zacatecas, a charge of 1,000 pounds of silver ore is treated in 13 hours; at San Dimas, 1,500 pounds in three days at a cost of $1 to $1.40 per ton.[7] A twelve-foot power arrastra can treat two charges of 2 tons each in 24 hours.[20] At Smartville and Mooney Flat, Nevada County, California, arrastras 12 feet in diameter, making 14 revolutions per minute, with steam power, grind 7 tons per charge, and the time of treatment is 1 hour: cost, 8 cents per ton. Louis[4] gives 6 horse power required for a 12-foot arrastra, making 12 revolutions per minute and treating 6 tons in 24 hours.

Mill 81, visited by the author, consists of four arrastras which grind the tailings from Mills 65, 73 and 74. These arrastras (see Fig. 158), consist of a pavement *A*, 2 feet thick, built of stones and cement with an underlying bed of

clay, 6 inches thick. The inside diameter is 12 feet; in the center is a step *B* of oak timber, projecting one foot above the pavement to receive the central shaft. Around the pavement is built a cemented stone wall *C* 2 feet thick, 4 feet high and 2 feet above the pavement. Upon the center step stands a rough, vertical shaft or spindle *D* of pine wood, 2 feet in diameter, 8 feet high, with a toe of 3-inch diameter round iron at the lower end to support it in the step, and an extension of 2 feet above the top, of 3-inch round iron to act as the top journal. This upper journal runs in a wooden bearing bolted to the side of a horizontal round timber *E*, which is 16 inches in diameter, 32 feet long, strongly supported and braced at the ends. Four timbers *F*, 6×8 inches, pass horizontally through the vertical shaft, the top of each being 1 foot above that of its predecessor and one-eighth of the circle in advance of it, and furnish eight arms, each of 12½ feet radius, for the support of the water wheel. At the end of each arm are suspended two vertical timbers *G*, 2×6 inches, supporting a horizontal impact water wheel, 24 feet inside diameter. The buckets are placed between two rims *I*, 8 inches apart; each rim is made of two thicknesses of 1-inch board 8 inches wide which by breaking joints, maintains the circular form. The buckets *H* are 8 inches deep and are made of two parts, the upper making 75° with the horizontal, sloping toward the water jet; the lower, 30° with the horizontal and about right angles to the jet of water. The jet of water, not shown in the figure, is 5 inches wide, 10 inches deep, and slopes 45°, with a head of 12 to 16 feet. The speed is 12 to 14 revolutions per minute.

Four drag stones *J*, weighing from a ton down, are attached by chains to the horizontal arms and the length of the stones is so placed with reference to the radius that one stone causes an outward current while another causes an inward current. The stones last from one to three months, according to their size. Generally, two new and two old stones are run together. The pavement, 2 feet thick, lasts 4 months.

The charge for each arrastra is estimated to be 4½ to 5 tons. The feed sand is tailings which have passed through screens with 0.030-inch (0.76 mm.) round holes, bringing water enough to liquify the pulp. The treatment lasts twenty-four hours and the sand is mostly ground to fine mud.

Computing the power from the flow of water, and assuming the efficiency of the water wheel to be 40%* and that of the jet 100%, the power actually used would be from 5.25 to 8.1 horse power. Three men per 24 hours are required to run the four arrastras. For further particulars see Mill 81 in Chapter XX.

A small arrastra is used in Mill 58 as clean up pan and is further described under that head.

Amalgamating Pans.

§ 206. The modern combination pan (see Figs. 159*a*-161*b*), has been developed along the lines indicated in the early patents of 1855 to 1875. It is a flat bottomed pan with an iron cone in the center, with high sides nearly or quite vertical, and in it a horizontal, annular disc, called a muller, is revolved.

It has three important duties to perform: it grinds the ore, it furnishes iron for the chemical reactions of the process, and it mixes the mercury with the ore in order that amalgamation may follow. Some high authorities, among whom is M. P. Boss, claim that the reduction in size should be completed before the ore is fed to the pan and that the pan should not be used as a grinder except in rare instances.

The mixing or circulation of the pulp is the most important feature in the operation. Upon it depend all the others. Two kinds of circulation are required

* Weisbach: "Hydraulics," p. 348.

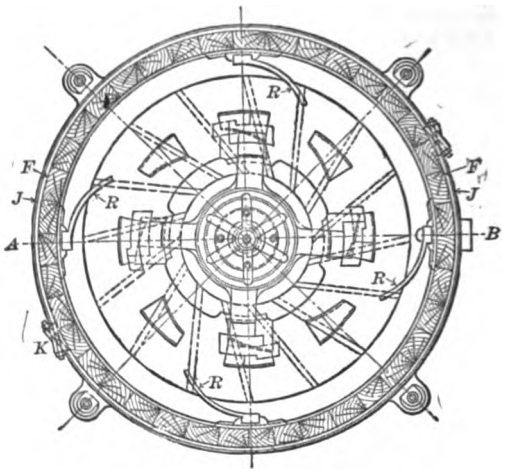

FIG. 159*a*.—PLAN OF FRASER & CHALMERS COMBINATION PAN.

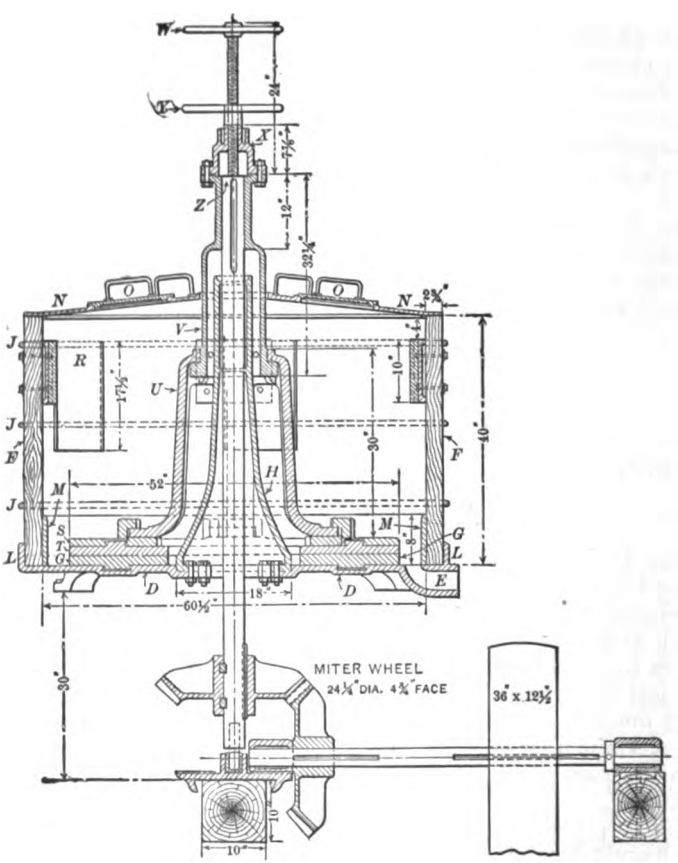

FIG. 159*b*.—SECTION A B.

in a pan: the whirling of the pulp around in a circle, due to the rotation of the muller. This is simply and easily done. Secondly, a circulation which causes the pulp to flow outward from the center at the bottom, then to rise up the sides, next to return toward the center at the top and finally to fall down to the bottom to start over again, making a complete and continuous mixing up and overturning of the whole pulp. This circulation has been accomplished by the perfection of the design of the pan.

§ 207. THE FOUNDATION FRAME, PAN BOTTOM AND CENTRAL CONE.—Each pan has four feet *A*, (Fig. 161*b*.) These are bolted to two long timbers *B* running under the whole row of pans; these timbers are supported by two posts under each pan, which in turn stand upon sills below. Cross bars notched into the posts support the boxes or bearings *C* (Fig. 161*a*.) Each of these boxes has three parts: a step for the vertical shaft, a bearing for the gear end of its own horizontal shaft and another for the pulley end of its neighbor's shaft. The Boss pan (see Fig. 160*a*), substitutes two cross caps at each pan for the two long timbers and uses four posts instead of two. It also has a different style of box to allow the use of one long horizontal shaft for the whole row of pans.

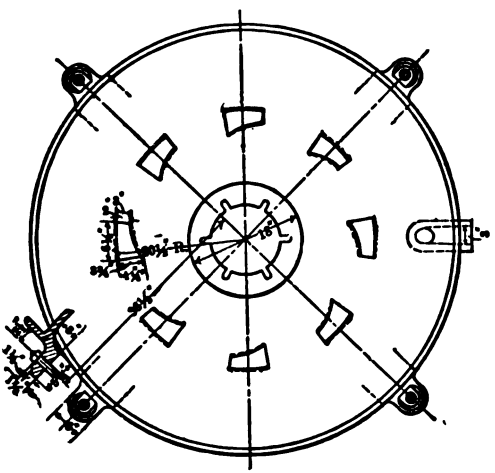

FIG. 159*c*.—PAN BOTTOM.

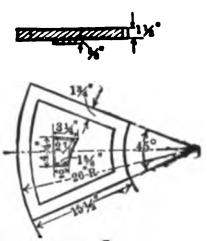

FIG. 159*d*.—DIE.

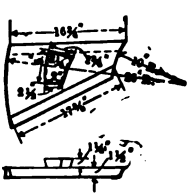

FIG. 159*e*.—SHOE.

The pan bottom (Fig. 159*c* and *D*, Fig. 159*b*) is a cast iron disc supported on the four feet. At one side is the discharge spout *E*, (Fig. 159*b*), with an orifice about 3 inches in diameter. This is placed as low as possible to drain off all the mercury. At the Lyon mill, Dayton, Nevada,[36] this spout was found to wear out much faster than the pan bottom. They therefore, used a larger nipple, in which was driven an oak bushing to take the wear. When this wore out it was replaced at little expense. An amalgam well may be attached to the spout if the mercury is to be settled in the pan, otherwise the pulp is run directly into the settler. Settling mercury in the pan is now practically obsolete.

The bottom supports the sides *F* (Fig. 159*b*), the dies *G*, and the central cone *H*. The central cone is in two parts: the cylindrical part above, carrying the bearing for the vertical shaft, and the conical part below, to prevent a stagnant center. These two parts are generally cast in one piece. The union between the base of the cone and the pan bottom is usually made by flange and bolts; the two are, however, sometimes cast in one piece. A sleeve is sometimes used

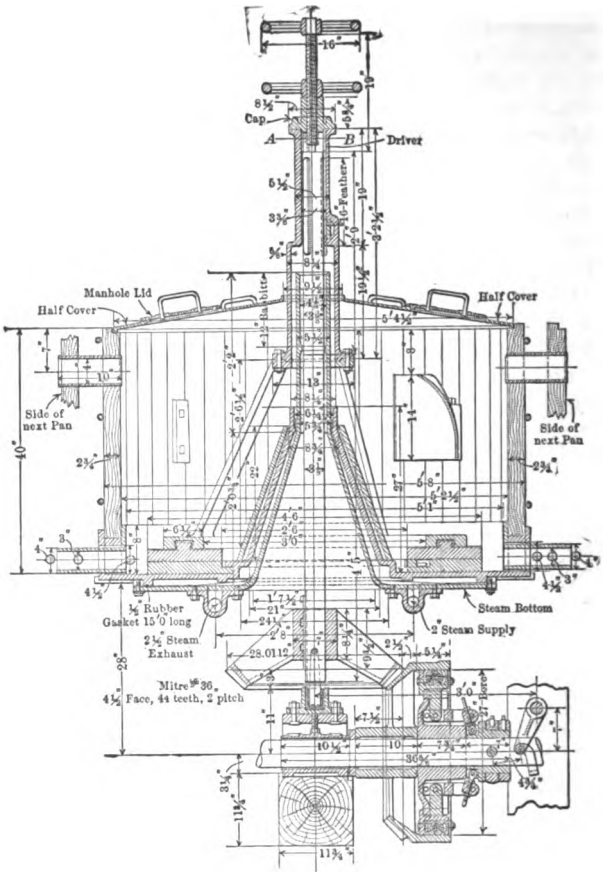

FIG. 160*a*.—SECTION OF BOSS PAN.

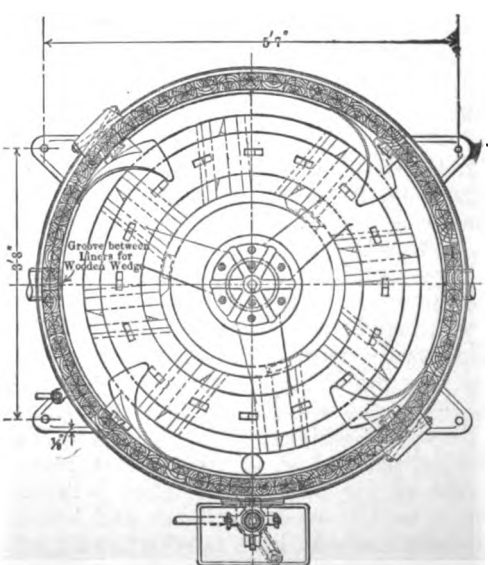

FIG. 160*b*.—PLAN WITH COVER REMOVED.

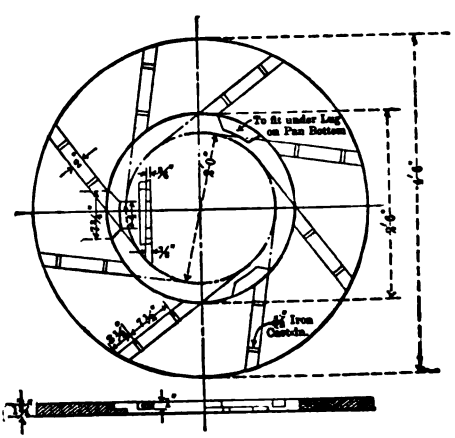

FIG. 160*c*.—DIE RING.

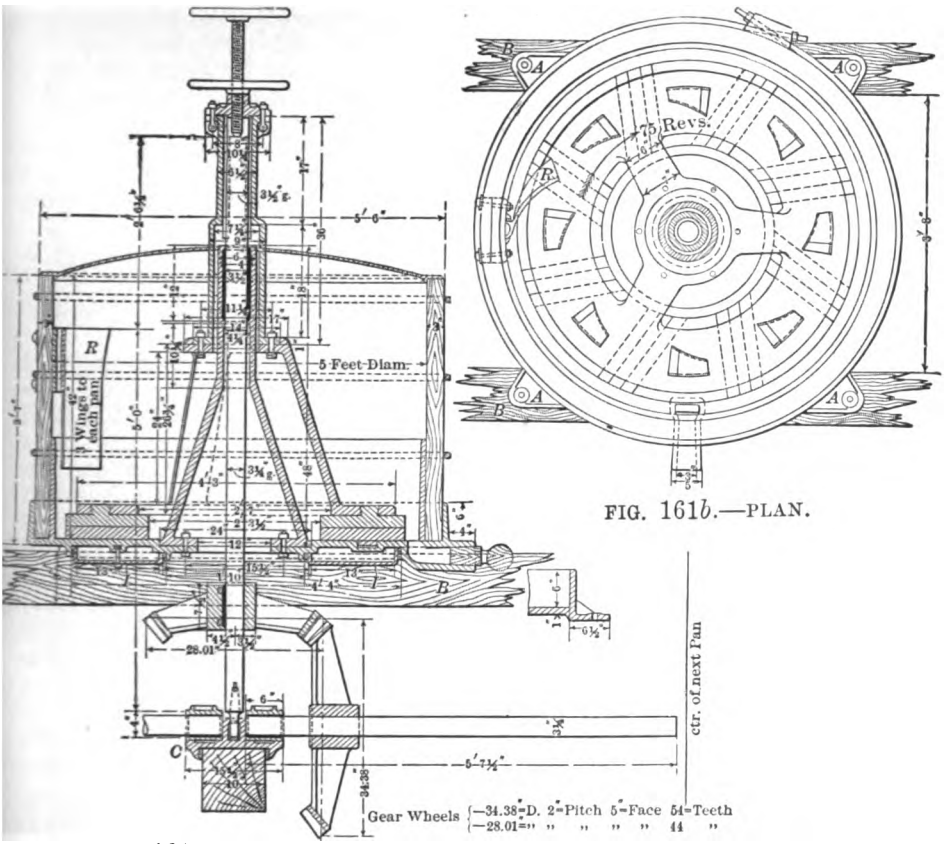

FIG. 161*b*.—PLAN.

FIG. 161*a*.—SECTION OF UNION IRON WORKS COMBINATION PAN.

to protect the central cone. At the Lyon mill, this was 1 inch thick and 36 inches high.

In the pan made by the Union Iron Works, protection is given by a false cone, not shown in Fig. 161*a*, which at its base fills the space inside the die ring. It is held in position by cement which is poured between it and the central cone. For details of the pan bottom and central cone, see Table 137.

TABLE 137.—DETAILS OF PAN, PAN BOTTOM AND CENTRAL CONE.

Abbreviations.—C. P.=Combination pan; In.=inches; Lb.=pounds.

Mill or Works.	Junction of Cone and Bottom.	Diameter of the Base of Cone.	Inside Diameter of the Ring.	Depth of Pan.	Revolutions per Minute.	Weight of Charge.	Inside Diameter of Pan.	Weight of Pan.	Weight of Central Cone.	Weight of Bottom.
		In.	In.	In.		Tons.	In.	Pounds.	Lb.	Lb.
E. P. Allis Co., C. P.	Bolted	20	58½	40	65–75	.....	60	6,500	475	2,000
Boss pan	Cast together (*a*)	26	61	40	75	.....	62½	9,300	.....	.....
Fraser & Chalmers, C. P.	Bolted, see Fig. 159*b*	18	59	40	75	1–1½	60½	(*b*)	326	1,355
Risdon Iron Works, C. P.	Bolted	24	58½	30–36	75	1½	60	6,500 to 8,000	1,600	.....
Union Iron Works, C. P.	Bolted, see Fig. 161*a*	24	(*c*)	42	75	1½–3	60	8,466	650	*d*2,135
C. P., Lyon Mill[26]	Bolted with gasket	15	61	55	.....	2–3	65	.....	.....	.....

(*a*) See Fig. 160*a*. (*b*) 8,000 pounds with steam bottom; 7,000 pounds without. (*c*) 58¼ inches at the top; 58½ inches at the bottom. (*d*) With steam bottom.

§ 208. THE STEAM JACKET AND STEAM PIPE.—These are devices for heat-

ing the contents of the pan to aid the chemical reactions needed for amalgamation. The former is a space to be filled with steam. It is sometimes made by bolting a steam tight annular disc *I*, (Fig. 161*a*), on the bottom, furnishing a steam space between the two, or it is made by dropping a conical lining over the cone inside the pan. The steam space is then between these two cones. Still a third method is that adopted in the Boss pan (Fig. 160*a*), which has the pan bottom and conical lining cast in one, and slipped over the permanent cone, and the disc steam cover below; this gives a steam jacket to both the bottom and the cone.

In case live steam is preferred to a steam jacket for heating the pulp, a vertical steam pipe is arranged at one side to deliver dry steam within 5 or 6 inches of the bottom of the pan. A chamber and drip cock must be placed to dry the steam just before it is admitted.

The steam jacket may or may not be used. The advantage of the steam jacket is that the heat of the exhaust steam from the engine may be saved and the dilution of the pulp prevented. The advantage of the steam pipe is that it heats the pulp quickly. The disadvantages are that it is more costly since pure steam must be used, as oil in the exhaust steam would hinder amalgamation, and secondly it is liable to liquify the pulp too much. Both methods were in use in the mills visited by the author. Mill 82 used steam jacketed inner cone, bottom not jacketed, and live steam in the pulp. Mills 83 and 84 used steam jacketed bottom and live steam in pulp.

§ 209. Sides, Flange, Ring, Lining and Covers.—The sides *F* (Fig. 159*b*) are generally made of wooden staves 2½ to 3 inches thick. They rest on the bottom and are held together by two or three hoops *J* (Fig. 159*b*). The commonest form of hoop is ¾-inch round rods with the ends passing through rod binder blocks *K* (Fig. 159*a*), and with nuts to take up slack. Mill 82 has hoops of 2½×¼-inch flat iron riveted. Boiler iron is sometimes used for the sides. In this case the bottom joint is caulked with some form of packing. Small pans have bottom, sides and cone all cast in one piece.

Outside, around the bottom, and cast with it, is a flange *L* (Fig. 159*b*), to hold the staves in place and give a water tight joint. Between this and the staves, packing may be caulked. Inside the staves is a ring *M* (Fig. 159*b*), which may or may not be cast with the bottom. This ring supports the staves, takes the wear and furnishes iron for the chemical reactions, and, if separate, may be replaced before the bottom is worn out. The details of the ring are given in Table 138.

TABLE 138.—RINGS.

Mill or Works.	Height of Rings.	Weight of Rings.	Thickness of Rings.	Cast on Bottom or Separate.
	Inches.	Pounds.	Inches.	
Mill 82	10	.....	¾	Separate.
Mill 83	7	.....	1	Separate.
Mill 84	7	.....	1½	Separate.
Lyon mill	10	.....	2	Separate.
E. P. Allis Co	6	410	¾	Separate.
M. P. Boss	8	.....	¾	Separate.
Fraser & Chalmers	8	330	¾	Separate.
Risdon Iron Works	5	400	¾	Cast on bottom.
Union Iron Works	16	544	¾ at top, ⅞ at bottom.	Separate and in halves

At the Lyon mill, a lining of 1-inch boards, 24 inches long was used to take the wear off the staves.

Pans are provided with covers *N* (Fig. 159*b*), of cast iron, wrought iron or wood which are in halves for ease of removing. They serve to keep in the heat and steam. They have holes with lesser covers *O* for feeding, sampling and

inspecting or one-half the large cover may be removed at the time of feeding. The weight of the cover as given by the Union Iron Works is 315 pounds.

§ 210. Dies (Fig. 159*d* and *G*, Fig. 159*b*), are flat pieces of iron which are laid around the bottom of the pan in such a way as to form an annular ring. A space is usually left between them which acts as a channel for the outward flow of the pulp. These channels are usually oblique to the radii.

The dies are made of chilled iron and may be dovetailed separately to the bottom as in Figs. 159*b* and 159*c*, or they may be cast in a single annular ring with channels between the dies as in Figs. 160*a* and 160*c*, or finally, a single die ring without any channels is used as in Figs. 161*a* and 161*b*. This is either cemented in, or held by dovetails to the pan bottoms, or by lugs on it and in the pan. Where no channels are used in the dies, those in the shoes are depended upon wholly for feeding the ore to the grinding surfaces. The single die ring, whether with or without channels, saves much time in changing dies over the independent dies, and to some extent protects the bottom against cutting and solution, especially when cemented in.

There are two depressions in the bottom of the pan which may or may not need treatment to prevent formation of pools of mercury. They are the annular spaces inside the inner die circle and outside the outer one. The Union Iron Works (Fig. 161*a*), get rid of the inner one by bringing the central cone down to the dies, and the outer by driving in a pavement of wooden blocks with grain on end flush with the top of the dies. The E. P. Allis Co. run in cement to fill both spaces flush with the die tops. Fraser & Chalmers (Fig. 159*b*), leave the two spaces unfilled claiming that a properly run pan need not be troubled by pools of mercury.

The removal of the worn-out dies is effected by a bar. The details of the various forms of dies are given in Table 139.

TABLE 139.—DIES.

Abbreviations.—Deg.=degrees; Lb.=pounds.

Works.	Number of Dies.	Total Weight.	Thickness of Dies.	Design of Dies.	Diameter of Inside Die Circle.	Diameter of Outside Die Circle.	Angle of Bevel of Edges	Depth of Channels.	Horizontal Width of Channels	Diameter of Circle to which Front Edge of Channel is Tangent.
		Lb.	Inches.		Inches.	Inches.	Deg.	Inches.	Inches.	Inches.
E. P. Allis Co.....	8	640	1½	Separate dies.....	21	52	90	1½	(*a*) 1½	(*b*) 0
M. P. Boss.....	8	....	1¾	Channeled ring....	30	54	90	1	2	(*c*) 24
Fraser & Chalmers.	(*d*)8	647	1½	Separate dies.....	21	53	90	None.	None.	None.
Risdon Iron Works..	8	600	3¼-3½	Channeled ring....	30	54	45	1½	2½	(*e*) 8 to 10
Union Iron Works..	1	743	1½	Solid ring.....	27½	54½	None.	None.	None.	None.

(*a*) At the periphery. (*b*) The channels are radial. (*c*) These channels are outward channels; each channel has two round rod pieces, ½ inch in diameter, cast in to strengthen the casting for shipping (see Fig. 160*c*). (*d*) These dies in position make a solid annular ring with no channels in it whatever (see Fig. 159*d*). (*e*) These channels are inward channels.

§ 211. Wings, Muller, Shoes and Pulp Current.—The wings are deflectors, *R* (Figs. 161*a* and 161*b*), generally four in number, shaped somewhat like inverted plough shares. They are bolted or dovetailed upon the sides of the pan near the top of the pulp and deflect the revolving current toward the center of the pan. At the Lyon mill, five vertical strips, 3×4×30 inches, were tacked upon the wooden linings and were said to give good results.

The muller or muller plate *S* (Fig. 159*b*), is an annular disc of cast iron. It serves to convey the power to the shoes or upper grinding parts. Formerly when grinding in the pan was the rule, the shoes (Fig 159*e* and *T* Fig. 159*b*), were invariably attached to the muller by wedging dovetails (see Figs 159*a*-161*b*), which were tightened by the action of the shoes on the dies. This method was

necessary on account of the frequent renewals needed. More recently where grinding is not used the shoes and muller are often cast all in one piece. The shoes are oblique sectors of circles, that is, their edges are oblique to the radii. Table 140 shows the details of muller and shoes in the different styles of pans.

TABLE 140.—MULLER AND SHOES.

Abbreviations.—Deg.=degrees; In.=inches; Lb. pounds.

Mill or Works.	Shoes Cast or Dovetailed to Muller.	Outer Diameter of Muller.	Outer Diameter of Shoes.	Inner Diameter of Muller.	Inner Diameter of Shoes.	Number of Shoes.	Total Weight of Shoes.	Thickness of Shoes.	Thickness of Muller.	Bevel Edges of Shoes.	Weight of Muller Plate.	Horizontal Width of Channel Between Shoes.	Diameter of Circle to which Front Edge of Channel is Tangent.
		In.	In.	In.	In.		Lb.	In.	In.	Deg.	Lb.	In.	In.
Mill 83	Cast	.....	.....	.....	.....	.....	.....	.....	.....	.....	.....	.....	.....
Mill 84	Cast	.....	.....	.....	.....	4	.....	.....	.....	.....	.....	Wide.	.....
Lyon mill	.....	55	.....	21	.....	8	.....	.....	.....	.....	.....	(b)	(d)
E. P. Allis Co.	Dovetailed.	52	52	25	21	8	560	1½	1¼	45	(a)768	6½	(e) 8
M. P. Boss	Dovetailed.	49	54	36	30	8	.....	2	2	45	.....	4½	(e) 10
Fraser & Chalmers	Dovetailed.	52	52	24&27	21	8	407	1½	1¼	45	331	(c)	11
Risdon Iron Works	Dovetailed.	50	54	34	30	8	600	2	1¼–2	45	225	2½	e 8–10
Union Iron Works	Dovetailed.	51	54½	31	27½	8	494	1½	1½	37	(a)730	2	(e) 12

(a) With spider. (b) 3 inches at the inner end, 6 inches at the outer. (c) 4 inches at the inner end, 2½ inches at the outer. (d) Spiral channels. (e) These channels have the outer end in advance of the inner end.

The pulp current is chiefly generated at the bottom of the pan. The two main causes which affect the current are the centrifugal force due to the revolution of the muller, and oblique shoe and die channels. Shoe and die channels are thus defined: Outward channels for shoes are those in which the inner end of the revolving channel is in advance of the outer, that is, it would strike a stationary radial arm before the outer, while outward die channels are those in which a revolving radial arm would strike the inner end of the channel in advance of the outer. In inward channels for both shoes and dies the obliquity to the radius is the reverse of what it is in outward. The action of oblique channels is like that of a plow which in outward channels throws the pulp outward and in inward channels throws it inward. Since the action of the die channels is much weaker than that of the shoe channels and they furnish disadvantageous settling basins for holding mercury, they are frequently omitted. The central cone occupies the space where the centrifugal force would be weak, and which would otherwise be occupied with a sluggish mass of pulp. Obviously the larger the cone the less will the stagnant center hinder the action of the centrifugal force. The thickness of the pulp affects the current by its viscosity, the thicker the pulp the slower the current will be and the greater the power required.

There are two classes of mills: those which work with thin pulp and those with thick. The design of the pans has to be made to suit the class of mill in which they are to be employed. The mills using thick pulp have narrow cones, outward channels in shoes and likewise in dies if die channels are used. Here the sluggishness due to the narrow cone requires thick pulp to support the mercury, and the thick pulp requires that the centrifugal force be supplemented by outward shoe channels. The mills using thin pulp employ wide central cones in order to obtain the needed activity of pulp. Here the activity derived from thin pulp and wide cone is so great that an outward channel can be used to dam back the outward current in the channels due to centrifugal force, which then overflows its banks and finds its outlet between the shoe and die and gives a uniform outward current acting all around the circle, instead of mainly in the channels as is the case in the thick pulp pans. This uniform outward current

sweeps the quicksilver more thoroughly from the bottom, and consequently carries more in suspension. The particles of quicksilver being smaller and more numerous, it is claimed that the contact of quicksilver and pulp is better, the amalgamation is more quickly performed and the loss of quicksilver is less. The pans of M. P. Boss (Figs. 160*a*-160*c*), of the Union Iron Works (Figs. 161*a*-161*b*), and of the Risdon Iron Works, are designed with wide central cones and inward shoe channels. The E. P. Allis pan has inward shoe channels with narrow central cone. The Fraser & Chalmers pan (Figs. 159*a*-159*e*), has outward channels and narrow central cone. The designs of dies are quite variable. Boss uses outward die channels. Risdon uses inward die channels. Allis uses radial die channels. The Union Iron Works and Fraser & Chalmers have no die channels.

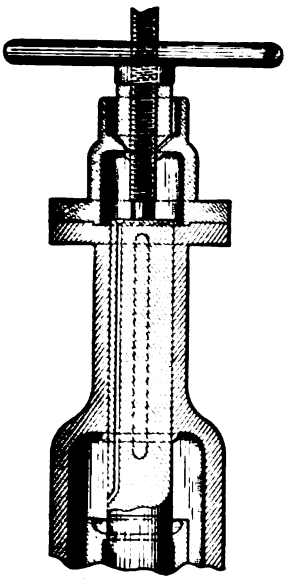

FIG. 162.—DONAHUE'S PATENT OILING DEVICE.

§ 212. SPIDER, DRIVER AND CAP, LUBRICATION AND GRINDING.—The spider *U* (Fig. 159*b*), by which motion is imparted to the muller is in the form of a cone above, divided into legs below, the spaces between which allow the inward-flowing pulp current to pass. It is usually cast in one piece with the muller. Between this spider and the central cone an annular space 4 inches wide, more or less, is left. At the upper end of the spider is the driver *V* (Fig. 159*b*), which is either cast in one piece with it or more commonly bolted to it. This has in it a long bearing for the vertical shaft, on one side of which is a keyway making a loose fit with a feather on the shaft. This guarantees that the muller shall revolve with the latter, but allows it to be raised and lowered at will. It is so raised and lowered by a hand wheel *W* (Fig. 159*b*), and a screw threaded into the cap *X* which is usually flanged and bolted to the top of the driver. This screw bears on the top of the central shaft *Z*. The screw has a second hand wheel *Y* upon it serving as a lock nut to maintain the muller at any desired height. Weights of these pieces are given in Table 141.

TABLE 141.—WEIGHTS OF SPIDER AND DRIVING CONE.

	Spider.	Driving Cone.
	Pounds.	Pounds.
E. P. Allis Co.	.....	350
Fraser & Chalmers	266	561
Risdon Iron Works	.....	225
Union Iron Works	.....	270

The usual method of lubricating the central shaft is to put the oil in a cup-shaped cavity in the top of the cap, from a hole in the bottom of which it trickles down the length of the shaft. P. J. Donahue has devised a special arrangement, shown in Fig. 162, for lubricating the central cone bearing by a cup in the upper end of the shaft and a conducting tube in the same, by which he has made a saving in the wear on the babbitt, the expenditure of oil and the loss of quicksilver.

The grinding takes place when the shoes are lowered upon the dies. As each shoe channel filled with pulp passes over the die surface, it smears that surface

with ore; the shoe immediately following grinds the ore so smeared. The die channels when used act upon the shoe surface in the same way. Add to this the fact that the pulp is circulating, always bringing in new ore particles, and we have the conditions which establish the pan as a high quantity, fine, wet grinder.

§ 213. VERTICAL AND HORIZONTAL SHAFTS.—The vertical shaft *Z* (Fig. 159*b*), stands in the center, revolves in a step below and a bearing in the top of the central cone. It receives power from a horizontal shaft by a beveled gear below. The horizontal shaft of the combination pan is mounted below the pan and has two bearings, one beneath its own, the other beneath the adjacent pan (see Fig. 159*b*). It receives power from a line shaft below by a slack belt and tightener to make and break the connection. For a set of Boss pans one continuous shaft is used and the individual pans are connected with the power by friction clutches on the driving pinions (see Fig. 160*a*), thereby effecting the saving of one long line of shafting.

§ 214. USES AND METHOD OF WORKING.—The pan is used for the amalgamation of silver ores with or without preliminary grinding. When grinding is used it reduces stamp stuff of 30 or 40 mesh down to 100 mesh or less. The sizes of the stamp screens in the mills visited are given in Table 142. Of the size of ground pulp no measures have been made. The practical test is as to its feeling between the thumb and finger; the grit should be nearly gone.

There are three mill processes which employ pans: The Washoe process in which the pan grinds and amalgamates pulp after wet stamping; the Reese River process in which the pan amalgamates stuff which has been dry stamped and roasted with salt, and the Combination process, in which the pan amalgamates with or without previous grinding, the tailings of vanners treating pulp from stamps and amalgamating plates.

TABLE 142.—SIZE OF STUFF TREATED BY PANS.

Abbreviations.—B. W. G.=Birmingham Wire Gauge.

Mill No.	Meshes per Linear Inch	Wire. B. W. G.	Net Size of Holes.	Pan Work.
			Inches.	
82	30	29	.02	Amalgamating only.
83	35	30	.0166	Grinding and amalgamating.
84	40	32	.016	Amalgamating only.

There are two methods of working: (*a*) Intermittent or tank system. (*b*) Continuous or Boss system.

(*a*) In the intermittent system the muller is raised to clear the shoes and dies ⅜ to ½ inch, then it is started and water and ore are fed alternately, until the whole ore charge has been fed and the pulp is so thick as to support the mercury well and yet thin enough to flow. The consistency desired will depend upon the design and speed of the pan and must be learned by experience. If the charge is to be ground, the muller is now lowered to bring the shoes and dies into bearing. The charge is now heated up by jacket or direct steam, or both, to about 180°F. (see Table 143), and maintained at that temperature throughout the grinding and amalgamating. At the Lyon mill[26] the pan was heated to a point just bearable to the hand as higher heat was found to volatilize mercury. W. G. Dodd considers that heating is unnecessary and that a normal temperature (60 to 70°F.) is preferable to any other. The grinding, if used, continues from ½ hour to 4 hours (see Table 143).

When the ore is sufficiently ground the muller is raised, mercury is added;

amalgamation continues 4 to 8 hours. The pulp is then diluted and run into the settler, and the next charge is added.

Table 143 gives the routine of amalgamation as practiced at the three combination mills. The action of the chemicals will not be discussed here as it belongs rather to metallurgy than to ore dressing.

TABLE 143.—METHOD OF RUNNING 5-FOOT PANS IN COMBINATION MILLS.

Abbreviations.—F.=Fahrenheit; ft.=feet; hrs.=hours; in.=inches; lbs.=pounds; min.=minutes; oz.=ounces.

	Mill 82.		Mill 83.		Mill 84.	
Diameter and height of pan	.....	5 and 3 ft.	.....	5 and 3 ft.	.....	5ft. and 38in.
Revolutions per minute	.....	65	.....	75	.....	75
Ore charge	At start.	1 ton.	At start.	1¼ ton.*	At start.	1¼ ton.
Heating	At start.	(a)	.....	166° to 180° F	.....	180° F.
Salt added	At start.	70 lbs.	At start.	100 lbs.	At start.	60 lbs.
Sulphuric acid added	At start.	2 lbs.	At start.	1½ to 2 lbs.	after 30 min	½ lb.
Sulphate of copper added	At start.	2 lbs.	At start.	1½ to 2 lbs.	after 45 min	2 lbs.
Fine wrought iron borings added	.....	.....	At start.	½ to 2 lbs.	.....	.....
Concentrated lye added	.....	.....	At start.	2 to 3 oz.	.....	.....
Mercury added	At start.	100 lbs.	After 3 hrs.	80 to 125 lbs	after 2½ hrs	60 lbs.
Cyanide of potassium added	.....	.....	.....	.....	At start.	1½ oz.
Slaked lime added	.....	.....	.....	.....	After 5 hrs.	4 lbs.
Total time of grinding	.....	0	.....	3 hours.	.....	0
Total time of amalgamating	.....	4 hours.	.....	5 hours.	.....	5½ hours.
Total time of discharging	.....	.....	.....	.....	.....	½ hour.
Total time of charge	.....	4 hours.	.....	8 hours.	.....	6 hours.
Charges per 24 hours	.....	6	.....	3	.....	4
Number of pans	.....	24	.....	24	.....	20
Half the pans charged	.....	Every 2 hrs.	.....	Every 4 hrs	.....	.....
Number of settlers	.....	12	.....	12	.....	10
Clean up	.....	.....	.....	2 a month.	.....	1 a month.

(a) 30 minutes to get hot.

(*b*) The Boss system places the pans and settlers in a series all on the same level. The pulp, much thinner than in the tank system, is fed from stamps to the first of the series, flowing continuously through them. The feed and discharge pipes are near the tops of the pans and settlers. The earlier pans of the series do the grinding, being usually of special design, the later do the amalgamation, and the settlers recover the amalgam.

§ 215. POWER, WEAR AND LOSSES OF IRON AND MERCURY.—The power for driving a pan 5 feet in diameter, as estimated by mills and manufacturers, is given in Table 144.

TABLE 144.—HORSE POWER NEEDED FOR DRIVING PANS 5 FEET IN DIAMETER.

	For Grinding.	For Amalgamating.
Mill 84	.....	5
E. P. Allis Co	6	4
Fraser & Chalmers	6	3
Risdon Iron Works	10	5
Union Iron Works	5	.....

The wear as given by Egleston[22] for Comstock mills is as follows: Brunswick mill shoes and dies, 30 days; Eureka mill shoes and dies, 30 days; Stewart's mill shoes and dies, 3 to 4 months; Nederland mill shoes and dies, 5 months; average practice the whole pan, 3 years.

The wear as given by Austin[33] at the Harshaw mill using the Boss system with 8 shoes and dies to a set for one pan, the weight of a set being 1,504 pounds, was as follows: No. 1 pan, shoes and dies last 13 to 18 days; No. 2. pan, shoes and dies last 13 to 18 days; No. 5 pan, shoes and dies last 18 months.

The loss of iron[60] varies from one-fifth of a pound when the ore is free, poor

and not ground, up to 25 pounds where the ore is base, rich and roasted. The loss of iron when free ores alone are ground is from 6 to 10 pounds of iron per ton of ore for wear and chemical action.

In regard to mercury used,[60] 100 pounds or more of mercury per ton of ore appear to be sufficient for the process and the loss of mercury is from ½ to 3 pounds of mercury per ton of ore treated; 1½ pounds is a reasonable loss.

§ 216. Cost of Pan Amalgamation.—Assuming that a pan treats six charges of one ton each in 24 hours (*a*), the various items of cost estimated from different sources are as follows:

Power.—4 horse power (*b*) at 13 cents (*c*) per 24 hours.		8.667	cents per ton
Labor (*d*)—4 pan men at $4.00=$16.00 per 24 hours			
2 pan helpers at $3.00=$6.00 " " "			
10 tank men at $3.00=$30.00 " " "			
Total for 24 pans=$52.00 " " "			
Total per pan= $2.167 " "	or	36.112	" " "
Chemicals (*e*)—70 pounds of salt per ton at ½ cent per pound		35.000	" " "
2 pounds of sulphuric acid per ton at 2 cents per pound		4.000	" " "
2 pounds of copper sulphate per ton at 3.75 cents per pound		7.500	" " "
Loss of Mercury.—1½ pounds (*f*) at 50 cents per pound		75.000	" " "
Wear.—Pan weighs 4 tons (*g*) costs $400.00 (*g*) and lasts 2 years (*i*) or 2,000 tons (*i*)		20.000	" " "
Shoes, dies, etc., 10 pounds (*f*) per ton at 4 cents per pound		40.000	" " "
Oil, Interest, Superintendence, etc. (*i*)		10.000	" " "
Total		236.279	" " "
		of $2.36	per ton.

(*a*) From Mill 82 of Table 142. (*b*) Average estimated from Table 144. (*c*) From Kent's "Mech. Eng. Pocketbook," p. 790. (*d*) From Mill 82. (*e*) Amounts from Mill 82; prices from current reports. (*f*) Taken from Tenth U. S. Census.[60] (*g*) Taken from catalogues. (*i*) Estimated.

Clean Up Pan.

§ 217. The clean up pan (see Figs. 163 and 164), is a small sized pan in which the sides, bottom and central cone are commonly all made in one casting, the bottom being very thick to take the wear. To the revolving spider or driving cone are screwed hard wood blocks (see Fig. 163), which are well adapted to give the gentle trituration, the special need for which will be referred to later. A replaceable die ring is sometimes used as in Fig. 164. As the charge does not rise above the muller no attempt to obtain a systematic pulp current is made. In other respects the clean up pan is constructed and mounted much like an amalgamating pan. Another form of clean up pan substitutes two rotating arms and two drag-stones for the spider and wooden blocks.

Amalgam obtained in a gold mill may contain particles of so-called rusty gold, that is, gold which is more or less coated with some sulphide, arsenide, or iron oxide. The stamping process has cleaned it enough so that one corner is amalgamated and it has therefore been caught. It may contain particles of pyrites including minute specks of gold which are amalgamated and caught as above.

It may contain simply enclosed within it, black sand, magnetite, etc., cast iron and graphitic particles from the wear of the mill. All of these substances make the amalgam impure and would bring down the fineness of the gold brick, or carry gold into the slag during the melting. The clean up pan subjects amalgam to a grinding action which is not severe enough to flour the quicksilver, but cracks the shells off the gold particles and uncovers the iron, graphite, magnetite, etc., and yields: (1) Clean amalgam; (2) mud. The amalgam is strained, re-

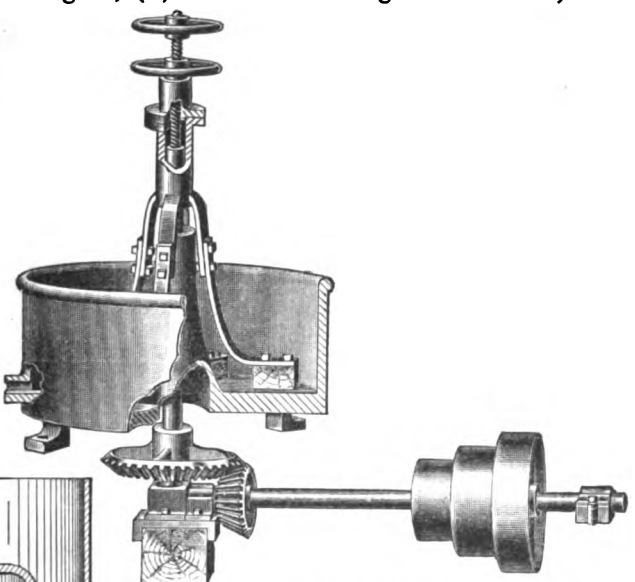

FIG. 163.—24-INCH CLEAN UP PAN MADE BY E. P. ALLIS CO.

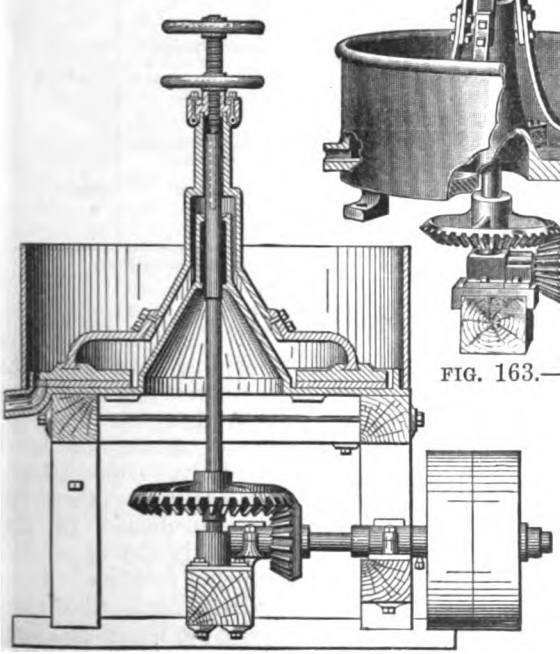

FIG. 164.—CLEAN UP PAN MADE BY RISDON IRON WORKS.

torted, melted to a brick. The mud can be settled in a tank, and when enough of it is had, sampled, assayed, and if rich enough, shipped to smelting works. In wet or dry silver mills, mineral enclosures and partially amalgamated particles may also be obtained. The clean up pan here also refines the amalgam as above.

This process does not deal with amalgamated lead or copper, etc., which form true amalgams. For the partial removal of these impurities, the reader is referred to references on metallurgy.*

* Prevention of base bullion due to manganese: *Am. Inst. Min. Eng.*, Vol. XVII. (1887), pp 771, 776, C. W. Goodale; *Ibid.*, Vol. II. (1874), p. 171, J. M. Adams. Effect of manganese on bullion: *Eng. & Min. Jour.*, Vol. XLIX. (1890), p. 130, A. D. Hodges, Jr. Removal of lead and copper: *Am. Inst. Min. Eng.*, Vol. XI. (1882), p. 105, W. L. Austin; *Eng. & Min. Jour.*, Vol. XLIX. (1890), p. 84, L. Janin, Jr.; *Berg. u. Hütt. Zeit.*, Vol. XXV. (1871), p. 29, L. Eich; *Rev. des Mines*, Vol. XXXI. (1872), p. 489, Fonseca.

Details of clean up pans and their uses are given in Table 145. The Risdon Iron Works make clean up pans 18, 24, 36, 48 and 60 inches in diameter. The power required for a pan 4 feet in diameter, making 30 revolutions per minute is 1½ horse power.[68]

TABLE 145.—CLEAN UP PANS.

Abbreviations.—In.=inches; Liq.=liquid; Min.=minute; No.=number.

Mill No.	Diameter.	Depth.	Revolutions per Min.	Grinders.	Mercury Charged.	Time of Treating Charge.	Feed.	Product.	Destination.
	In.	Inches.			Pounds.	Hours.			
57	24	12	20	.....	.....	.....	Foul amalgam.	Liq. amalgam. Mud.	.....
58	30	16	24	Two drag-stones.	.....	4	Heavy sand. Amalgam from clean up.	Liq. amalgam. Mud.	Hand pan.
66	60	.....	30	Regular combination pan shoes.	500 to 700	3	Amalgam from chuck-blocks, apron plates, sluices, mortar, old shoes, dies & screens. Heavy sands from curtain and riffle, mercury traps.	Liq. amalgam. Mud.	Separator box. Mud flushed off.
66	32	18	50	.....	.....	.....	Foul amalgam from sluice plates.	Amalgam. Mud. (a)	Retorts.
62	32	18	50	.....	.....	.....	Heavy products from Howland riffles, and cleaning up amalgamating pans.	Amalgam. Mud.	Hand pan.
63	30	18	50	.....	.....	.....	Amalgam scrapings from amalgamating pans.	Amalgam. Pulp.	Strainers. Settlers.
64	30	18	50	.....	.....	2	Heavy sand and amalgam from pans and traps.	Mixed.	Settlers.

(a) This mud is sampled; if rich enough it goes to smelter, otherwise back to battery.

Grist Mill or Buhrstone Mill.

§ 218. The Grist mill (see Fig. 165), is called Buhrstone mill when the French rough, silicious stones are used. It consists of two horizontal stone discs *AB*, of which either the upper *A* or the lower *B* revolves concentrically against the other stationary disc. In Fig. 165 it is the upper disc which revolves, being driven from the shaft *F* by the horizontal arms *G*. The material to be ground is fed through a hole *D* in the center of the upper disc and passing outward between the stones, is ground during the passage and discharged at the circumference *E*. The material is pulverized by a true grinding action.

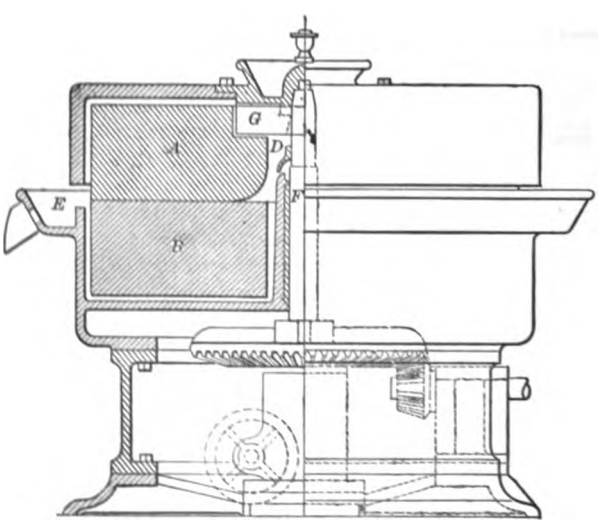

FIG. 165.—HALF SECTION AND HALF ELEVATION OF BUHRSTONE MILL.

Holmes & Blanchard of Boston, who have made a specialty of this mill, make nine sizes, ranging from 16 to 42 inches in

diameter, of French buhrstones, requiring from 1½ to 15 horse power and revolving 450 to 275 times per minute respectively. Their 42-inch mill has stones 8 inches thick. The eye *D* in the upper stone is 8 to 10 inches in diameter. Sixteen to twenty main furrows, with about two branch furrows each, are cut in the two grinding surfaces, oblique to the radius, running from the eye to the circumference (see Fig. 166). The outer part of the furrows, lagging behind the inner part, causes the particles to be drawn outward and ground as previously described under amalgamating pans, § 211. They are ½ to ¾ inch deep and 2 to 3½ inches wide, deepest at the edge which first reaches the particle and tapering to no depth at all at the other edge. These mills revolving 400 to 425 times per minute, grind 24 to 36 tons in 24 hours to 60 mesh. Instances are given of 1¼ tons of hard white quartz per hour to 60 mesh by a 42-inch mill running at 340 revolutions; another of 1½ tons of hard phosphate per hour. The stones require dressing every 10 to 14 days. For wet grinding of hard substances they will wear 18 to 20 months; on soft ores they may last ten years.

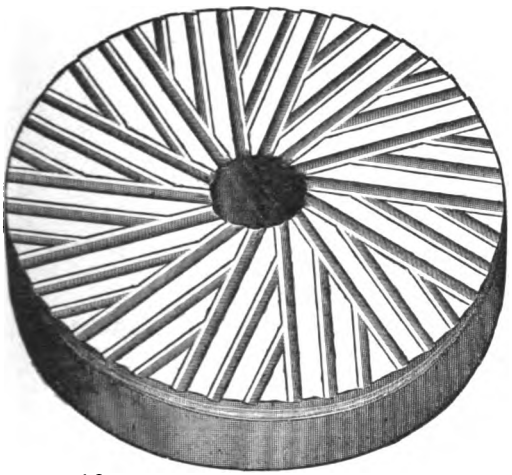

FIG. 166.—FURROWS ON THE FACE OF A BUHRSTONE.

R. Hunt says a mill 4 feet in diameter, making 100 revolutions per minute, grinds 5,376 pounds from 10 mesh through 60 mesh in 24 hours. Sahlin gives 9 tons per twenty-four hours as the capacity of a Buhrstone in grinding talc, using 20 horse power. The stones last two to three years and are dressed every two weeks.

The mill is driven by pulley, horizontal shaft, beveled gears and vertical shaft, which, when driving the upper stone, passes up through the lower mill stone and is attached to the eye of the upper by radial arms upon the shaft and gaps cut in the stone, or when driving the lower stone, is attached to it by arms and lugs, and notches in it. Granite stones are used for softer substances. The mill works well on soft substances. The proper size of feed is about ¼ inch in diameter.

THE ROCK EMERY MILL.

§ 219. This mill made by the Sturtevant Mill Co., works upon the same principle as a Buhrstone, but it uses emery instead of quartz, as the material to withstand the wear. The millstones are mounted to run either horizontally or vertically. A vertical mill is shown in Fig. 167.

It is well known that the skirt or outer margin of buhrstones wears faster than the eye. These stones correct that difficulty by having an eye of buhrstone and a skirt of emery (see Fig. 168). This emery millstone is prepared with an iron cup or shell into which are placed large blocks of emery which are laid as a skirt around an eye of buhrstone, and slabs of sandstone on edge are placed in positions through the emery skirt corresponding to the furrows of the buhrstone;

then the melted metal (zinc, bronze or iron) is poured around the blocks of emery and sandstone, fastening them firmly in their places. Such metal filling is used as is best adapted to the class of grinding required. These millstones need but little dressing, the furrows are easily opened because they are made of softer material than the rest.

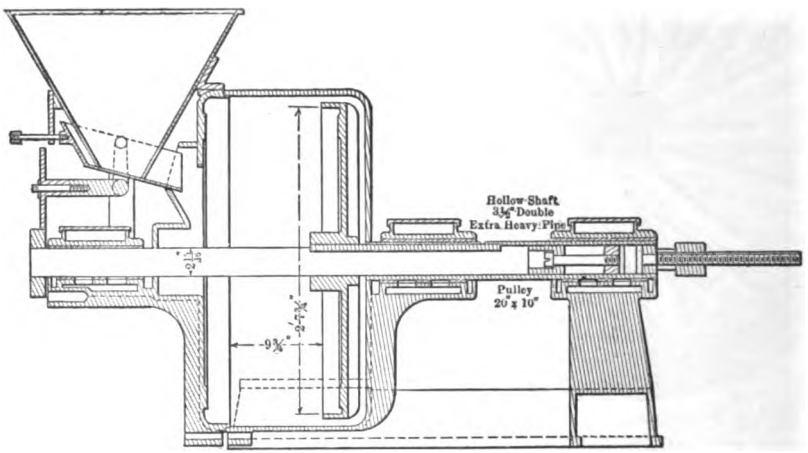

FIG. 167.—SECTION OF VERTICAL ROCK EMERY MILL WITH MILLSTONES AND PULLEY REMOVED.

Rock emery millstones are run, as before stated, in vertical or horizontal mills. The stones set to run vertically have a horizontal shaft and the stones set to run horizontally have a vertical shaft. The horizontal mill is driven by a horizontal pulley on the vertical shaft below the millstone.

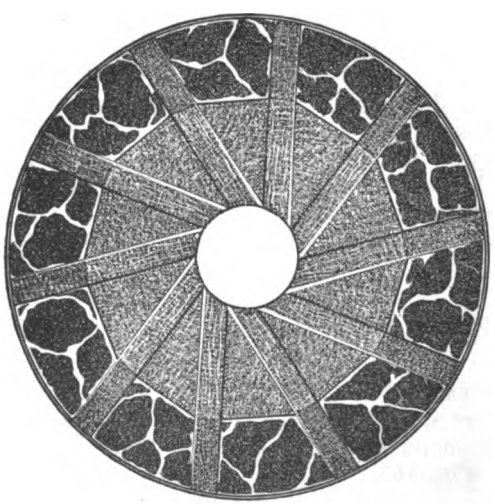

FIG. 168.—ROCK EMERY MILLSTONE.

Rock emery millstones are constructed in four sizes, 36, 42, 48 and 54 inches, to fit any grist mill frame, either as upper or under runners; but the manufacturers make the horizontal mills only as under runners with 42-inch millstones. Their running stone is firmly secured to the vertical shaft and the face of the upper stone is held automatically in exact parallelism with the face of the running stone. Details of horizontal mills using rock emery millstones are given in Table 146. For a 42-inch mill the stones cost $200 per pair and last about one year. The mill does not require any other repairs to speak of.

Where the millstones are set vertically, one stone only revolves. This is pressed against the stationary stone by a regulating screw. Vertical mills are made in four sizes. Of these, the figures on 16-inch and 30-inch mills are given

TABLE 146.—HORIZONTAL MILLS.

Diameter of Stone.	Revolutions per Minute.	Material Crushed.	Size of Feed.	Size of Crushed Rock.	Capacity per 24 Hours.	Horse Power.
Inches.			Inches.	Mesh.	Tons.	
36	400	Phosphate rock	.....	60	30	12
36	400	Portland cement	.....	60	24	12
36	400	Hard rock	.....	60	18	12
42	300	Phosphate rock	¼ to ⅛	60	48	20
42	300	Portland cement	¼	60	36	20
42	300	Hard rock	⅛	.....	24	20
48	180	From ⅓ to ½ less capacity than 42-inch under runners, and use 20 to 30 horse power.				
54	160					

in the Table 147. The figures for the 20- and 24-inch sizes range between these. The stones for vertical mills cost from $60 to $125 per pair and wear from eight months to two years.

TABLE 147.—VERTICAL MILLS.

Diameter of Stone.	Revolutions per Minute.	Material Crushed.	Size of Feed.	Size of Crushed Rock.	Capacity per 24 Hours.	Horse Power.
Inches.			Inches.	Mesh.	Tons.	
16	1,000	Litharge	¼	100	4.2	8
16	1,000	Plumbago	¼	100	8.6	8
16	1,000	Marble	¼	60	4.8	8
30	650	Gypsum	¼	60	72	25
30	650	Phosphate	¼	60	48 to 72	25
30	650	Iron oxide	¼	100	24	25
30	650	Sulphate of soda	⅝	60	60	25

Emery millstones running vertically can be run at high speed and are rapid fine grinders of moderately hard materials; but millstones running horizontally are capable of reducing much harder rock and crush finer than the vertical mills, but not so rapidly.

The machine is adapted for crushing $\frac{1}{4}$ to $\frac{3}{16}$ inch grains down to 60 to 100 mesh. The finer the product desired, the smaller should be the grains fed for rapid work.

Cummings Ore Granulating Mill.

§ 220. This is a vertical disc concentric grinder. An annular disc 36 inches in diameter, making 1,000 revolutions per minute on a horizontal shaft, pressed against a stationary annular disc within $\frac{1}{8}$ to $\frac{3}{8}$ inch of it, reduces $1\frac{1}{2}$- to 2-inch cubes down to $\frac{1}{16}$ inch diameter, the wear being taken up by a feed screw. Both discs have furrows dressed on them, similar to those of a Buhrstone mill. The ore is fed by a hopper through the stationary disc and discharges all around between the discs. A smaller mill crushed 1-inch cubes of cement clinker to wheat size at the rate of 20 tons per hour, consuming 50 horse power. The cost of renewals of wearing plates was $10 per month.

"Kegelmühle," Cone Mill or Coffee Mill.

§ 221. This mill (see Figs. 169*a* and 169*b*), has been for many years a standard machine in Europe for grinding coal. It consists of a fixed, open, cylindrical ring *g* as a die, and a closed conical ring *l* revolving concentrically within it, as the grinding shoe. The axes of cylinder and cone are both vertical; the annular space narrows downward. Upon both surfaces are placed cutting knives or teeth *yz*, which preferably slope downward and forward in the direction of revolution on the shoe, and downward and backward on the die. This provision is to prevent choking of the machine demanding excess of power and packing of the channels between the cutters, which might stop the grinding altogether.

The vertical shaft *s* is hung in a step below and a bearing above, and is driven

by bevel gears, horizontal shaft and belt pulley. The cylinder is 42 inches inside diameter and 18 inches high. The cone is 39 inches in diameter below and 24 inches at the top. The cutting knives or teeth are of five different lengths, all reaching the bottom, but extending up different distances according to their

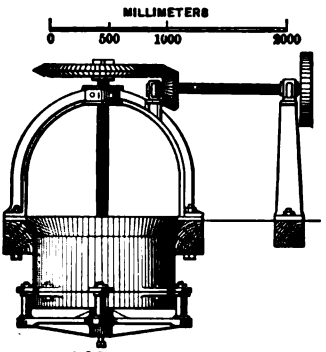

FIG. 169*a*.—ELEVATION OF CONE MILL.

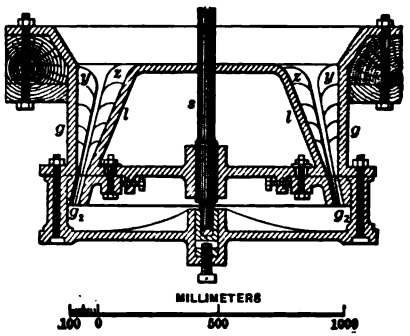

FIG. 169*b*.—SECTION OF CONE MILL.

lengths. They project out $2\frac{3}{4}$ inches at the top and taper down to 0.4 inch at the bottom. Both of these provisions facilitate the reception of the larger lumps at the top and the grinding of the smaller at the bottom. To complete the grinding, the annular space is prolonged $4\frac{1}{3}$ inches with rings g_2 having fine corrugated surfaces which take the hardest wear and are therefore, replaceable. The step below has a vertical adjustment for taking up wear and regulating size of product.

The machine is not adapted to crushing hard substances as the wear is excessive, but has been found advantageous for coal. A $3\frac{1}{2}$-foot mill, running at 12 to 16 revolutions per minute, crushes soft coal from 6 inches diameter down to $\frac{1}{2}$ inch diameter at the rate of 184 tons per 24 hours, using 3 horse power. The corrugated rings last 8 to 14 days. The shoes and dies above last 3 to 6 months. The machine can be run wet or dry.

Sample Grinder.

§ 222. This is a cone mill (see Fig. 170), capable of receiving lumps of 1 inch diameter and of grinding them down to $\frac{1}{8}$ to $\frac{1}{40}$ inch in diameter or even less by one passage through the mill. The coarser the finished product, the more rapid is the work.

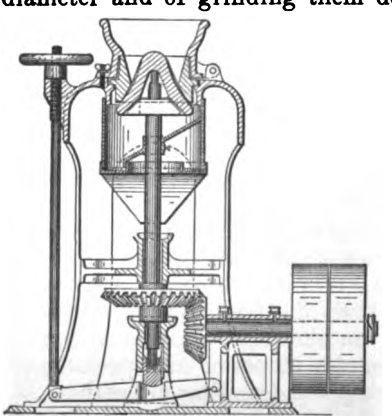

FIG. 170.—SAMPLE GRINDER.

The vertical shaft is driven by beveled gears and pulley below, and stands upon a movable step which is raised by a lever and hand screw, giving a quick adjustment of size of space between the revolving cone or shoe and the fixed ring or die, and, therefore, of the size of crushed grain. The coarser crushing is done by slight corrugations or teeth upon the upper parts of the shoe and die, while the lower parts are smooth and complete the crushing by a simple grinding action. It is usual to put the sample through several times, setting the surfaces

closer each time, and sifting out the fine ore after each passage. The hopper, the die and shoe can be taken out and cleaned at a moment's notice before charging a new batch. With some ores this cleaning is best done by grinding clean quartz in the mill.

The capacity is small as it is only intended for laboratory samples, but it is an extremely handy little mill for its purpose.

This mill is figured and described in the catalogues of most of the manufacturers of mill machinery. As made by Fraser & Chalmers, it requires 3 horse power; the cone revolves 150 times per minute; the total weight is 500 pounds.

The following sizing test* of chalcopyrite and calcite ground by a sample grinder to pass through a 20-mesh screen shows the quality of its work: On 20 mesh (over 0.85 mm.), 1.2%; through 20 on 24 mesh (0.85-0.708 mm.), 1.4%; through 24 on 30 mesh (0.708-0.535 mm.), 5.5%; through 30 on 40 mesh (0.535-0.374 mm.), 13.3%; through 40 on 50 mesh (0.374-0.279 mm.), 10.0%; through 50 on 60 mesh (0.279-0.232 mm.), 9.4%; through 60 on 70 mesh (0.232-0.197 mm.), 4.1%; through 70 on 80 mesh (0.197-0.171 mm.), 1.6%; through 80 on 90 mesh (0.171-0.155 mm.), 5.3%; through 90 on 100 mesh (0.155-0.139 mm.), 6.6%; through 100 on 120 mesh (0.139-0.110 mm.), 2.1%; through 120 on 150 mesh (0.110-0.093 mm.), 3.2%; through 150 mesh (0.093 mm.-0), 36.3%; total, 100.0%.

Heberli Mill.

§ 223. This machine crushes by the grinding action of two revolving, vertical discs that are placed eccentric to each other. Its chief field is grinding jig middlings.

As used in this country the discs are of cast steel and are 30 inches in diameter 4 inches thick with the center part made cellular to help it wear ahead of the periphery. These discs are mounted upon flanges of the same diameter, and they upon horizontal shafts with two boxes and one pulley each, the one slightly eccentric to the other, adjusted by sliding the boxes of one of the shafts. The pair of discs are housed in a sheet iron housing with a delivery spout below. The discs are driven at varying speeds, sometimes in the same and sometimes in opposite directions. The ore, of the size of peas or wheat, is fed with water through the center of one of the shafts by a worm feeder. The ground ore comes out at the periphery from between the discs.

The pressure for crushing and also the movement to take up wear of the discs, are both obtained by the use of a rack pressing against the end of the solid shaft, driven by a pinion, a drum, a chain, and a heavy weight. This gives a constant pressure of any desired amount.

Fraser & Chalmers make a Heberli mill (see Figs. 171*a* and 171*b*), which varies slightly from the preceding. The worm feeder is omitted and the rack and pinion are replaced by a rubber spring. The figures show the two discs without any eccentricity, but they are given a small eccentricity before starting to grind.

Mill 44 uses two Heberli mills fed with jig middlings $\frac{3}{16}$ inch to 0 in size, consisting of copper bearing conglomerate rock. The mills reduce this stuff to about $\frac{1}{10}$-inch maximum grain, guided by a testing hand sieve. The best combination of the many tried was to drive one shaft forward 300 revolutions per minute, the other backward at 60, by open and crossed belts respectively, and to use an eccentricity of 1 inch. They are fed by large hopper and bucket elevators delivering to the screw feeder. The capacity of each is 33 tons in 22 hours.

* Courtenay de Kalb, private communication.

At Mill 42, the Heberli mill has been tested against rolls for crushing jig middlings, showing marked advantage in favor of rolls. The capacity of rolls is greater and the cost is less. A pair of 22×16-inch rolls is used. Shells cost 4 cents per pound and last one month. The Heberli discs weigh 500 pounds per

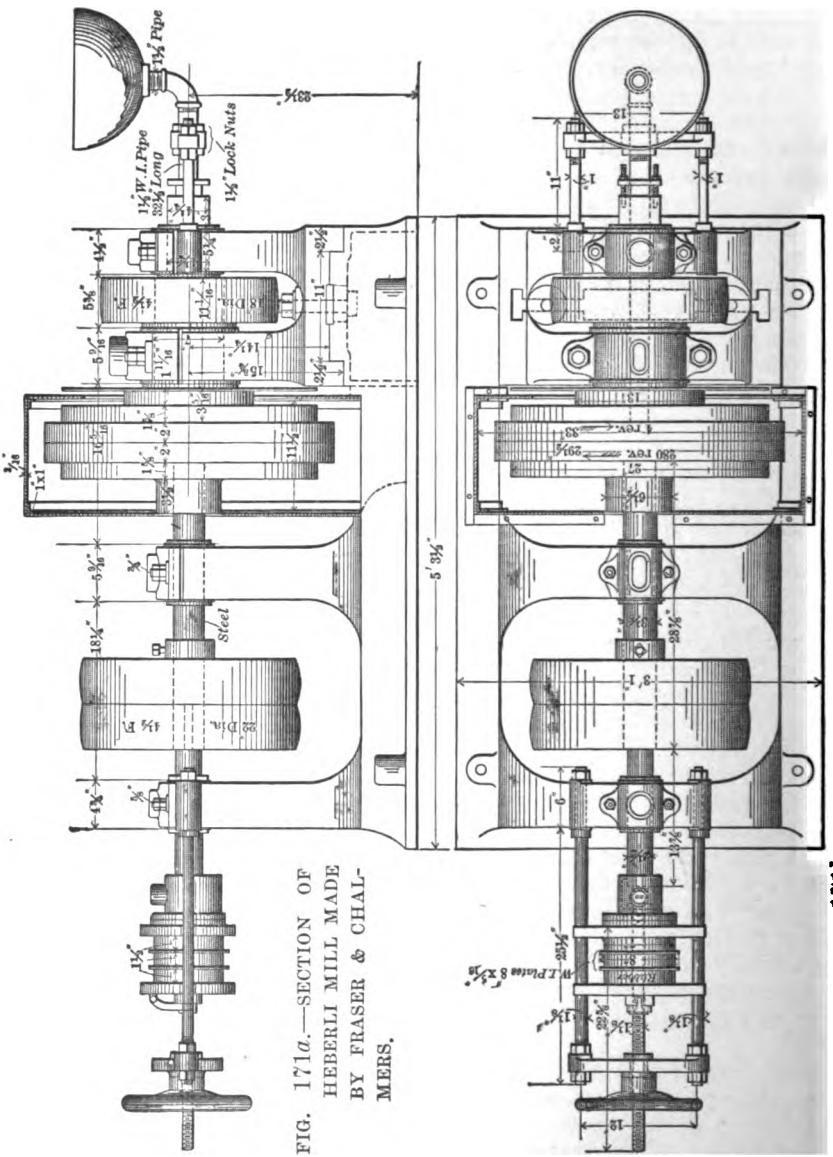

FIG. 171*a*.—SECTION OF HEBERLI MILL MADE BY FRASER & CHALMERS.

FIG. 171*b*.—PLAN OF HEBERLI MILL MADE BY FRASER & CHALMERS.

pair; cost 10 cents per pound and last 16 days. The rolls require 10 horse power and the Heberli mills 13 horse power each.

Fraser & Chalmers* give sizing tests on the ground conglomerate jig mid-

* Private communication.

dlings as follows: The wear of steel was 4 pounds per ton of pulp ground.

	Calumet Mill.	Hecla Mill.
	%	%
On 10 mesh.....	24.8	9.8
Through 10 on 16 mesh...	36.8	40.6
Through 16 on 30 " ...	21.8	20.1
Through 30 on 60 " ...	6.9	6.9
Through 60 on 100 " ...	3.8	6.2
Through 100 mesh.....	5.9	16.4
	100.0	100.0

These mills find favor in Mill 44 partly on account of their capacity and compactness, but chiefly on account of their ability to crush and prepare the native copper in this difficult product for jigging.

The parent form used in Germany drives but one disc, the other runs in the same direction by friction. These machines have springs, screws and hand wheels for setting up the pressure. The center parts of both discs have a line of pockets arranged spirally from the center, to advance the ore and to enable the center to wear in advance of the periphery. These also cause a suction which enables the machine to be run without a worm feed. A machine at Åmmeberg, Sweden,[92] treating galena and blende finely disseminated in quartz and hornblende, with discs revolving 300 times per minute, crushes 30,624 pounds (13,920 kilos) per 24 hours, from 4 to 2 mm. down to 1 mm. Twelve steel discs in 396 twelve-hour shifts, wearing from 264 pounds (120 kilos) each new to 30.8 pounds (14 kilos) old, crushed 6,063,552 pounds (2,756,160 kilos) of ore, corresponding to: 0.5223 kilo gross of steel worn per 1000 kilos ore ground, (1.044 pounds per 2,000 pound ton), and 0.4614 kilo net of steel worn per 1000 kilos ore ground (0.922 pounds per 2,000 pound ton). Repeated experiments show about ¾ to 1 inch (20 to 25 mm.) to be the best eccentricity. Water used is about 5¼ gallons (20 liters) per minute.

The power required at Przibram* for a two disc mill is 2½ to 5 horse power. This will crush the following quantities per 24 hours: 21,120 pounds (9,600 kilos) from 4 mm. to 2 mm.; 10,032 pounds (4,560 kilos) from 6 mm. to 2 mm.; 8,976 pounds (4,080 kilos) from 9 mm. to 2 mm.

Linkenbach describes another form with three discs, one large disc 74.8 inches (1.9 m.) diameter, revolving twice per minute, and two small discs about 27.9 inches (708 mm.) diameter, revolving 250 to 300 times. This form is sometimes mounted double with the pressure of one opposed by the pressure of the other. This six disc mill uses 21 metric horse power or 5¼ for a single disc. Capacity, power and water for the three disc mills are about double that required for two disc mills.

At Åmmeberg, Sweden, where the ore is galena and blende, finely disseminated in quartz, this three disc machine crushes 2,200 pounds (1,000 kilos) per hour, and in 318 twelve-hour shifts, crushed 8,395,200 pounds (3,816,000 kilos). The large steel disc wore from 1,373 pounds (624 kilos) down to 101.2 pounds (46 kilos) and ten small steel discs wore each from 198 pounds (90 kilos) to 22 pounds (10 kilos), giving 0.788 gross, or 0.733 net pounds worn per ton of 2,000 pounds. Using discs cast from scrap, the wear was 0.826 pounds per ton gross and 0.749 pounds net.

The power required at Przibram† for a three disc mill is given in Table 148.

James Bogardus Eccentric Mill.

§ 224. This mill, invented in 1832, consists of two circular, horizontal grinding plates, the lower attached by a flange to a vertical driving shaft, the upper

* *Berg- u. Hütt. JaArb.*, Vol. XXXI. (1883), p. 207. † *Ibid.*

TABLE 148.—POWER FOR A THREE DISC HEBERLI MILL.

Horse Power Used.	Capacity per 24 hours.		Size of Feed.	Size of Product.
	Pounds.	Kilos.	Mm.	Mm.
5 to 8	58,060	26,400	4	2
5 to 8	31,680	14,400	6	2
5 to 8	26,400	12,000	9	2

placed eccentric with the lower, running in a bearing in the cover of the mill, and driven by the friction with the lower plate. Power is applied either by pulley on the vertical shaft or by pulley on a horizontal shaft with bevelled gears transmitting to the vertical shaft.

The mill has the advantage over concentric mills that no two parts can come in contact consecutively, and hence the plates will wear evenly. The eccentricity also causes an even feeding, crushing and discharging of the particles. The eccentricity when grooved plates are used, causes also cutting action upon the material to be crushed.

The mill is made with a variety of grooved or smooth plates, according to the work to be done. The mill is fed through a hole in the upper plate and discharges at the periphery of the plate. Pressure is maintained by a weight and levers acting upon the bottom of the vertical shaft. It is used for grinding fertilizers, drugs, etc. There are five sizes, numbered from 2 to 6 inclusive. No. 2 takes 3 horse power and No. 5, 8 horse power. No. 2 is run from 300 to 800 revolutions per minute and crushes from 2 to 8 tons of bones, fire brick or clay in 10 hours.

Ball Mills.

§ 225. The Bruckner Ball Mill was the parent form of the Grüson ball mill and consisted of a cylinder revolving on a horizontal axis with die plates around the circumference. The ore ground by balls, passed out through the spaces between the die plates and fell upon a screen surrounding the cylinder. The oversize of this screen was carried back to the feed spout by spiral end elevators while the undersize was discharged into the bin.

The Grüson Ball Mill* (see Figs. 172*a* and 172*b*), is a cylindrical mill revolving on a horizontal axis. Inside it are many chilled iron or steel balls of different sizes. The ore is ground by the attrition of the balls against each other and against the die ring. The die ring is composed of five perforated, spiral, chilled iron plates arranged so that each laps the next, which by forming steps, give the balls a drop from one to the next, and furnish a space beneath the step for the return of the oversize of the outer screens. Outside the die plate is a coarse perforated screen to take the wear, in five parts with spaces between, and again, outside that is a fine gauze screen. A deflector or shovel is placed at the end of each section of fine screen to convey on its upward journey the oversize of the screens back into the grinding space. The ore is fed through a hopper at one end and is discharged through the screens. The cylinder is enclosed in a plate iron housing with a discharge spout below. The mill is driven by gear and pinion with tight and loose pulleys. The mill can be run wet or dry and is suitable for fine grinding of cements, fertilizers, clays and soft ores. With hard ores the quartz grinds the balls too much. It is fed with egg size. There are eight sizes of mills of which three are given in Table 149.

* This, in its latest improved form, is called the Krupp ball mill and is manufactured by Fried. Krupp Grüsonwerk.

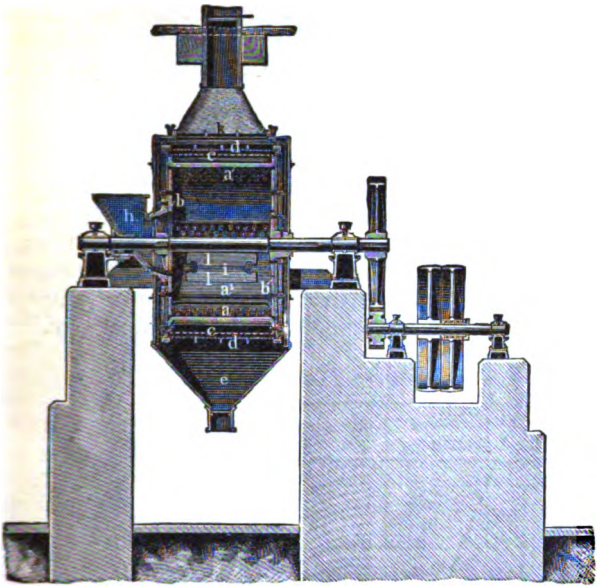

FIG. 172*a*.—LONGITUDINAL SECTION OF GRÜSON BALL MILL.

FIG. 172*b*.—END SECTION OF GRÜSON BALL MILL.

a. Die ring.
b. Side plates.
c. Coarse screen.
d. Fine screen.
e. Discharge spout.
f. Deflector or shovel.
g. Back deflecting holes in coarse screen.
h. Feed hopper.
ill. Manhole.
k. Dust pipe.

TABLE 149.—GRÜSON BALL MILL.

Size.	Diameter.	Revolutions per Minute.	Balls.		Horse Power Used.	Capacity per 24 Hours.	
			Total Weight.(a)	Diameter.		On Coarse Work.	On Fine Work.
	Meters.		Kilos.	Mm.		Kilos.	Kilos.
0	.660	45	15 45	40 80	¼	1,680 of copper ore to 15 mesh.	840 of chrome iron ore to 130 mesh.
2	1.330	30	100 100 100 217	100 115 125 100	2½ to 3	14,400 of brick bats to 20 mesh.	1,920 of emery to 200 mesh.
4	1.660	25	217 217	115 125	9 to 11	12,720 of gold ores to 40 mesh.	10,800 of chrome iron ore to 130 mesh.

(a) No. 0 has 60 kilos, No. 2 has 300, and No. 4 has 650 divided as shown, as mixed sizes do better than one size only.

The wear of balls from grinding 102,400 barrels of cement was 1,345 kilos. Assuming a barrel to weight 415 pounds, this gives 0.139 pounds of metal worn off the balls per ton crushed. The end plates last 18 months.

THE JENISCH BALL MILL is similar to the Grüson and is used by the Commonwealth Mining and Milling Co. at Pearce, Arizona, for grinding gold and silver ore preparatory to pan amalgamation. The plant consists of three No. 5 machines having cylinders 2,210 mm. in diameter and 1,030 mm. long, and one No. 2 machine having a cylinder 1,640 mm. in diameter and 800 mm. long. The capacity of the whole plant is about 80 tons in 24 hours, the No. 5 machines grinding about 23 tons each in 24 hours. The size of the material fed is about 3 to 4 inches in diameter; the product passes through a 40-mesh screen. One man is required to tend the four machines. The power is estimated at 5 horse

power for the No. 2 machine and 12 horse power for the No. 5 machine. The pulp is much more uniform than that from a stamp mill. The machines have not been running long enough to estimate wear, but it is thought from present indications that it will be low.

The Dodge Improved Pulverizer.

§ 226. This is a hexagonal barrel revolving on a horizontal axis. The arrangement of the perforated die plates and screens is similar to the Grüson Ball Mill, except that it has but one thickness of screen outside the die. Within it are placed steel balls of 15 and 30 pounds weight and pieces of quartz, or the former only. It is used for wet or dry crushing and the results are similar to stamp mill work, as shown by Table 150 and the following sizing test from Wagoner.[152]

TABLE 150.—DODGE IMPROVED PULVERIZER.

Size of Mill.	Capacity per 24 Hours. (a)	Horse Power.	Revolutions per Minute.
	Tons.		
0	40 to 60	15	18
1	20 to 40	10	25
2	10 to 20	5	32

(a) Depending on the size of screen.

	Quartz Crushed Dry through 35 Mesh.	Quartz Crushed Dry through 20 Mesh.	Quartz Crushed Dry through 20 Mesh.
	%	%	%
Through 20 on 24 mesh.....	.0	15.0	19.00
" 24 " 30 "	.0	19.2	28.25
" 30 " 35 "	.0	9.8	11.75
" 35 " 50 "	35.5	13.5	17.50
" 50 " 60 "	8.0	3.5	5.50
" 60 " 100 "	12.5	7.0	7.25
" 100 " 120 "	7.5	4.5	5.25
" 120 " 150 "	10.0	4.5	3.75
" 150 mesh.....	26.5	23.0	6.75
	100.0	100.0	100.00

This mill is modified for treating cement gravel in such a way that it is disintegrated without breaking the pebbles, which pass out through the hollow trunnion.

Tustin's Rotating Pulverizing Mill.

§ 227. This consists of a revolving die ring or tire 11, with horizontal axis in which are screening slots (see Figs. 173*a* and 173*b*). Within it are two loose cylindrical rollers 10, which crush the ore by their weight. Outside of the die ring is the fine screen 14, which limits the size of crushing. Two sizes are made (see Table 151).

TABLE 151.—TUSTIN'S MILL.

Size.	Die Ring.		Large Roller.			Small Roller.			Capacity per 24 Hours.	Horse Power Used.	Revolutions per Minute.
	Inside Diameter.	Length.	Diameter.	Length.	Weight.	Diameter.	Length.	Weight.			
	Inches.	Inches.	Inches.	Inches.	Pounds.	Inches.	Inches.	Pounds.	Tons.		
Large..	54	18	19½	18	1,200	14	18	750	12 to 24	4½	20
Small..	40	14	13	14	475	11	14	350	4 to 10	1½	32

The die ring is 3¾ inches thick and is made in eight sections, of chilled cast iron or steel and has slots in it parallel to the axis, 12 inches × ¼ inch, widening

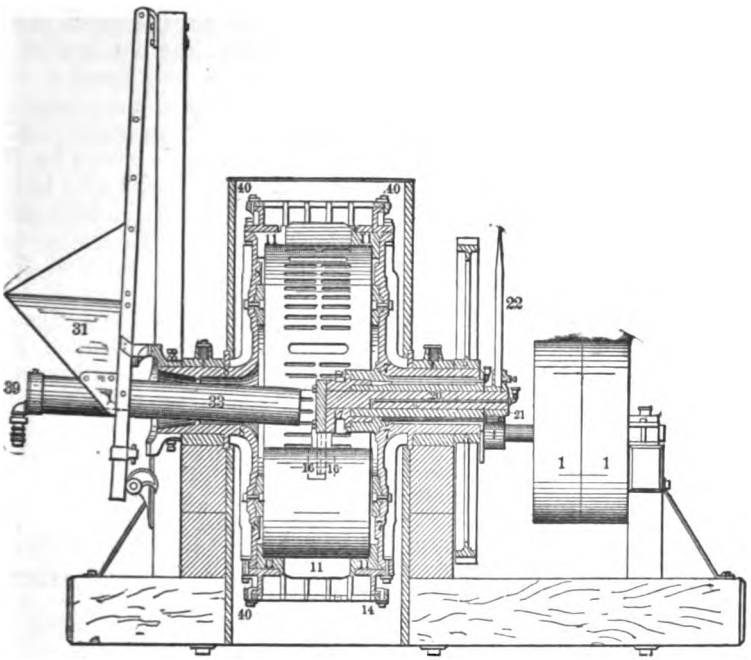

FIG. 173*a*.—CROSS SECTION OF TUSTIN'S ROTARY PULVERIZING MILL.

outward. The slots 13 at the end of each section for returning the oversize of the outer screen are about 1 inch wide. The screen is made in eight sections,

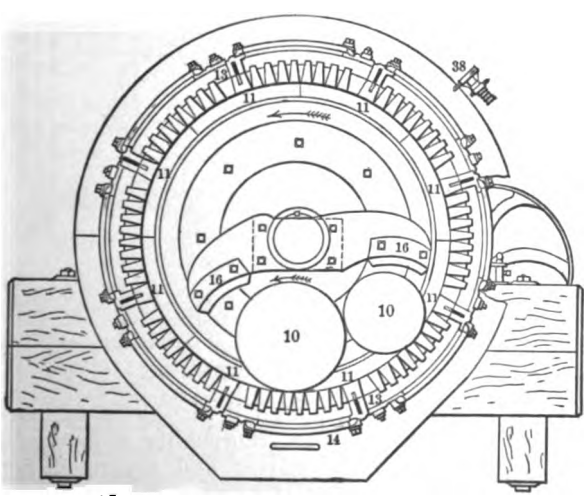

FIG. 173*b*.—SECTION OF TUSTIN'S ROTARY PULVERIZING MILL.

each 18×18 inches for the large size. The revolving part, consisting of the die ring 11 and end discs 7, 8, is mounted on two hollow trunnions or journals

and has at one end a gear wheel 5 driven by pinion 4 and pulley 1. Through the gear trunnion a shaft 20 passes and on the inner end is keyed an indicator yoke 16 and on the outer end an index pointer 22. Through the opposite hollow trunnion a tube 33 fed by hopper 31 and water jet 39, brings in the ore. A water jet 38 is played on the outside of the screen near the top to clear it. For dry crushing the two water jets are left out. A plate iron housing 40 riveted together encloses the whole machine and delivers the pulp in a spout below. The indicator yoke 16 is acted upon by the rollers. When the machine is under fed, the rollers oscillate back and forth, which state of things is shown by the index pointer. By placing a cam on the pointer, an automatic feeder may be provided.

Wagoner[152] gives the capacity of the large mill as 12 tons in 24 hours, crushing through a 20-mesh screen. He gives the following sizing test of the pulp: Through 35 on 50 mesh (0.45 to 0.305 mm.), 58.5%; through 50 on 60 mesh (0.305 to 0.255 mm.), 13.5%; through 60 on 100 mesh (0.255 to 0.175 mm.), 14.5%; through 100 on 120 mesh (0.175 to 0.120 mm.), 5.5%; through 120 on 150 mesh (0.120 to 0.075 mm.), 3.0%; through 150 mesh (0.075 mm. to 0), 5.0%. The sizing test shows that this machine ranks very high as a non-sliming crusher. The wear of iron is about the same as that of gravity stamps. It is especially adapted to crushing gold ores where the sliming of tellurides is to be avoided and concentration is the chief method of beneficiation.

Clean Up Barrels.

§ 228. "In cleaning up the mortars and mercury traps of gold stamp mills, much valuable amalgam is found mixed with quartz, iron and other foreign

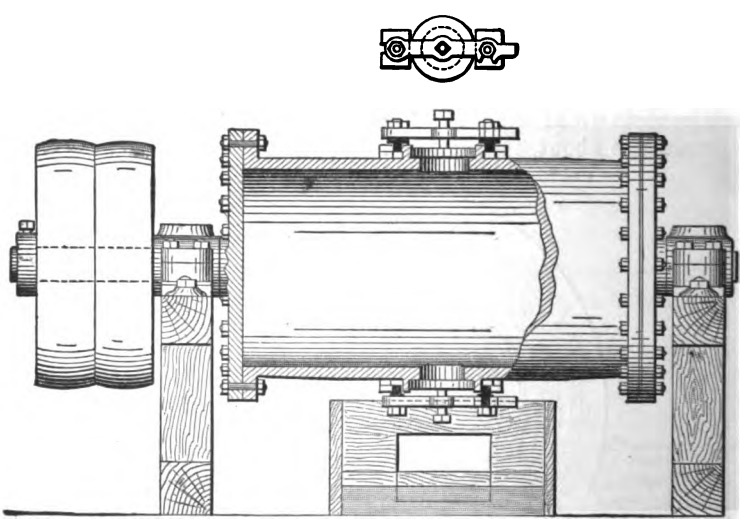

FIG. 174.—CLEAN UP BARREL.

matter. These cleanings, upon being placed in the clean up barrel, with additional quicksilver and cast iron balls, are thoroughly ground and worked, the amalgam being taken up by the quicksilver and separated from the waste matter."*

They work intermittently, receiving a charge, grinding it for a specified time and later discharging it. They are ball mills consisting of plain iron cylinders revolving on horizontal axes (see Fig. 174). Heads carrying the trunnions or

* From catalogue of Fulton Engineering Works.

journals are bolted to the flanged ends of the cylinders. They are sometimes driven by direct pulleys, sometimes by pinion and gear. They are generally provided with a manhole on one side and a hand hole on the other. Both are closed by covers flush with the inner surface of the cylinder, made tight with rubber gaskets and held in place by screw clamps. Sometimes one opening only is used. A few large spherical balls of chilled cast iron are used. A barrel requires 2½ horse power when running at 30 revolutions per minute. Figures upon these ball mills are given in Table 152.

TABLE 152.—CLEAN UP BARRELS.

Abbreviations.—C.I.=Cast iron; Ft.=feet; In.=inches; Lbs.=pounds; No.=Number.

Mill No.	Material of Barrel.	Length.	Diameter.	Thickness of Shell.	Diameter of Shaft.	Length of Journals.	Diameter of Pulley.	Width of Belt.	Revolutions per Minute.	Iron Balls. Number.	Iron Balls. Weight of each.	Fed by	Product goes to	Time of Treatment.
		Ft.	In.	In.	In.	In.	In.	In.			Lbs.			Hours.
59	C.I.	....	....	....	....	....	....	....	30	(a)	.....	Black sand from various machines	Yields amalgam and tailings treated by chlorination or cyanide.	(b)
67	.....	4	24	....	....	....	....	....	75	.....	15	Heavy sand from battery, plates and traps.	Hosed out to a mechanical batea	24
68	.....	4	24	....	....	....	....	....	25	6 to 10	15	Battery residue and stuff from mercury traps.	Clean up pan.....	.....
65	C.I. (c)...	4	24	....	4	9	....	....	.....	(d) 12	28	Like Mill 73	Like Mill 73.....	26 to 46
71	.....	4	48	....	....	....	....	....	.....	.....	.....	.....	.....	.....
72	C.I.	4	24	....	2½	....	....	....	16	(e)	.....	Stuff from battery clean up and mercury trap.	Mechanical batea..	.....
73	C.I. (f)...	g 4	g 39	2	3⅞	8½	36	8	14	(d) 12	28	See text.....	See text.....	26 to 46
74	C.I. (f)...	g 4	g 39	2	3⅞	8½	36	8	14	(d) 12	28	"	"	26 to 46
76	C.I. (i)....	....	....	....	....	....	....	....	.....	.....	.....	Heads from carpet tables.	Amalgamated plates.	(h) 24

(a) Hard round stones. (b) Adds a little sulphuric acid to charge. (c) Hand hole, 5 inches diameter. (d) White iron. (e) Cast iron, 4 inches diameter. (f) Elliptical manhole, 18×13 inches; discharge hole, 1¼ inches diameter. (g) Inside. (h) After 18 hours add 1 to 1½ pints sulphuric acid; after 21 hours add mercury and water. (i) With ends bolted in.

In Mills 65, 73 and 74 the feed is the bottom sand from the twelve stamp mortars, sulphurets from the clean up room, and unfinished settlings from the No. 1 settling tank of the previous run. The charge is put in with balls, and about a flask of mercury (76½ pounds) and with water enough to cover over the sand to a depth of 12 inches. The doors are clamped and locked.

The discharging is done by opening the manhole when on top. Water is run in with a hose to flush out the finest of the mud to a catch hopper beneath. The water is then stopped and the 1¾-inch hole at the bottom is then opened. The amalgam and pulp are drawn off into buckets which go to the clean up room. The catch hopper takes the overflow of these buckets. A man then enters the barrel, lifts out the balls, hoses out as much fine pyrite as possible into the bucket below, and finally, scrapes out all the scrap iron.

The catch hopper is made of wood and is water and mercury tight, 5×5 feet area, with bottom sloping from three sides, the fourth side being vertical, and the outlet at the middle of the bottom of the fourth side. The earlier run of fine pulp goes directly to amalgamated plates below, but during the run of heavy stuff, a spigot pipe is placed in this outlet and mercury is caught in a kettle while the water and fine pulp escapes by an overflow to the amalgamated plates. And finally, the coarser residue is hosed from the catch hopper to the amalgamated plates. These plates are two in number, the first 12 feet long and 1 foot wide, the second 15 feet long and 1 foot wide. No. 1 settling tank (10×1×2 feet deep) is placed at the end of the first plate, and No. 2 settling tank (16×4

×3 feet deep) at the end of the second. A tilting tail at the end of the first plate is used when fine pulp is passing, to bridge everything over to the second plate and thence to the No. 2 settling tank. When, however, coarse pulp is being run the tilting tail is elevated and the pulp traverses only the upper plate and drops into No. 1 settling tank. The amalgam from these plates goes to the clean up room and is put with that obtained from the clean up barrel. The coarse settlings in the No. 1 settling tank are fed to the barrel in the next fortnightly clean up. The settlings from the No. 2 settling tank go to the chlorination plant and the overflow is waste.

The series of buckets ranging from the first with sulphurets and amalgam, to the last with scrap iron, are panned in the clean-up room in sinks arranged as follows: Mercury sink is of cast iron. It is 2½ feet × 2 feet × 1½ inches. This is placed at the left of the operator. In front is a wooden panning shelf, 5 feet long by 2½ feet wide and with three sides, 8 inches high, long enough for two men to pan at the same time. The bottom slopes toward and discharges into an iron tank 5 feet long × 2½ feet wide × 1½ feet deep, at the right.

The process is as follows: The contents of each bucket are screened wet through a gold pan, the bottom of which is punched with round holes ⅛ inch diameter. The oversize is hand picked, yielding: (1) Scrap iron which is waste; (2) coarse rock to stamps; (3) amalgamated scrap copper which is retorted, melted to a brick and sent to smelting works; (4) gold nuggets and hard amalgam which are put with soft amalgam. The undersize from the screen is caught in a gold pan. It is panned, yielding: (1) Soft amalgam which is strained wet through strong drilling and yields hard amalgam to retort and quicksilver to be used over; (2) heavy sulphurets to the iron tank which yields heavy settlings to barrel in its next run and overflow to the second of the series of tanks previously mentioned.

This mill also has a small clean up barrel 15 inches in diameter and 2 feet long in which the hard amalgam scraped off the amalgamated plates just previous to the fortnightly clean up, is ground for 24 hours with some mercury and water enough to make a thin paste. This barrel makes 28 revolutions per minute and it is discharged and the products treated in the same way as in the large barrel.

Mill 61 treats battery residue in a clean up barrel 12 hours. It is then discharged over a gently sloping inclined plane, 30 inches wide, upon the upper end of which most of the amalgam lodges. Thence the pulp passes to a riffle sluice box, 10 feet long, which catches nearly all the remainder of the amalgam. The remaining pulp is run into a tank and from here run over the mill sluice plates to catch any little remaining quicksilver.

The economical importance of a clean up barrel is frequently lost sight of in a stamp mill. By its use it is possible to save a remarkable amount of gold which would otherwise go to waste. Among the things treated by it are: (1) Old screens and pieces of scrap iron from the mortars which are first allowed to rust to pieces; (2) old straining cloths, brooms, chips, etc., which are burned and their ashes treated; (3) the sweepings and drainings of the mill, accumulated dust, flue dust, etc. Loring states that many thousand dollars may be saved in this way around a large plant.

Alsing Cylinder.

§ 229. This is a cylinder which grinds by flint pebbles and is used for grinding talc after a Griffin mill or a Buhrstone mill. It is 6 feet in diameter, 6 to 10 feet long, lined with porcelain brick and filled one-third full of round flint

pebbles, 1¾ to 2¼ inches in diameter. The porcelain lining for a 6×8-foot cylinder, weighs 2,500 pounds; costs 3½ cents per pound; lasts 3 to 4 years. The machine uses 800 pounds of pebbles per year which cost $21 per ton. It works intermittently and has a manhole for charging and discharging. A charge equal to 800 to 1,600 pounds is ground in 3 to 4 hours with the machine revolving 20 revolutions per minute and using 20 horse power. The heat generated is very great and sometimes causes pebbles to split.

Frisbee Lucop Mill.

§ 230. This mill (see Fig. 175), consists of a stationary die ring or tire with horizontal axis. Two small rollers, loosely held, are driven by two arms around

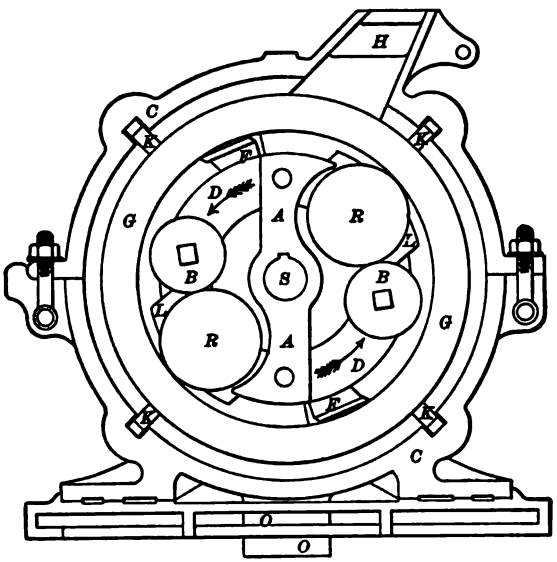

FIG. 175.—CROSS SECTION THROUGH CENTER OF FRISBEE LUCOP MILL.

AA. Arm.	*CC.* Shell.	*FF.* Fan blades.	*H.* Feed opening.	*OO.* Discharge.
BB. Drivers.	*DD.* Discs.	*GG.* Ring.	*KK.* Wedge bolts.	*RR.* Rolls.

inside the tire; their speed is such that centrifugal force acts energetically, doing the work of crushing between the rollers and the tire.

The machine is run wet with two screen discs, one on each side, or it is run dry with exhaust fans, with or without screens. A separate suction fan may be used. There are four sizes of mill: 16, 20, 24 and 30 inches. The 24-inch mill has a die ring of rolled steel, 24 inches inside diameter, 6 inches face, and 3 inches thick. The rollers are 8 inches diameter, 6 inches face and weigh 80 pounds each. The centrifugal force is 6,400 pounds when running at 300 revolutions per minute, and the mill grinds 1 ton of quartz or 3 tons of soft material per hour through a 60-mesh screen, using 15 to 18 horse power. The 20-inch mill makes 500 revolutions per minute, grinds ½ ton per hour through 60 mesh, using 8 horse power. A 30-inch wet mill, running at 300 revolutions per minute, crushes 4 tons of New Jersey bluestone rock per hour through a 40-mesh screen, using 12 horse power. Data on wear, water, and size of feed are not given. The wear will probably take place more on the lower part of the die ring than on the upper, due to the action of gravity. It is claimed that the mill is suitable for quartz ores of all kinds where pulverization to 40 or 60 mesh is needed.

The Griffin Centrifugal Stamp Mill.

§ 231. This mill (see Fig. 176), consists of a cylindrical ring or die, 30 inches inside diameter, 6 inches face, and 2 inches thick, with horizontal axis and three corrugated rolls or stamps, 12 inches diameter, 6 inches face. These

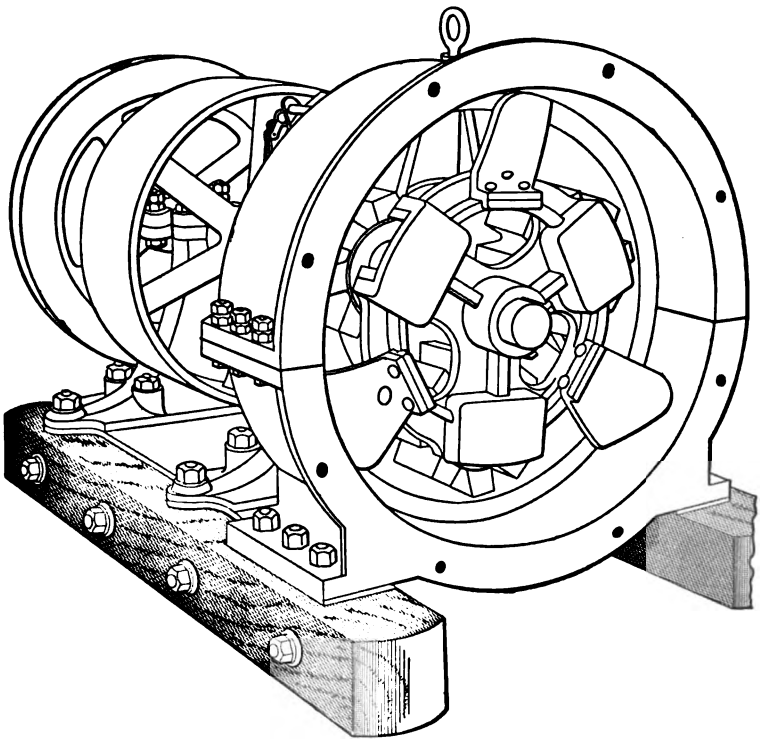

FIG. 176.—GRIFFIN CENTRIFUGAL STAMP MILL WITH FRONT CASE AND SCREEN REMOVED.

stamps weigh 110 pounds; are cast chrome steel, with 2-inch thick cylindrical shell, having a 4-inch hole in the center and a set of eight teeth or stamp shoes, 2 inches long, 2 inches wide and 6 inches face. The space between the teeth or shoes is about 2¾ inches at the outside. These stamps are mounted with a loose fit, on loose shafts, 3 inches in diameter and about 10 inches long. The three shafts are mounted between two three-armed spiders keyed to central horizontal driving shaft, one spider at each end of the machine. The bearings are so constructed that they compel the shaft and its stamp to gyrate about the main shaft, preventing them from lagging or hurrying, allowing the stamp to be forced out against the die by centrifugal force, but preventing the stamp at the top of the revolution from tumbling toward the center when at rest or slowly revolving.

On the discharge side are three scrapers riveted to the spider ring. The scrapers are plough shaped and cause the pulverized material, whether wet or dry, to pass through the screen. On the feed side are three spouts, each one in advance of a stamp, providing a continuous feed around the whole circle. These three spouts are fed by an axial feed hopper and some form of automatic feeder

outside. The screening surface is a disc 34 inches diameter and is held in place by a front case, closed all around, and discharging at the bottom. The die ring or tire is held in a shell of cast iron, having feet with which to bolt it to the foundation. It is in halves which are flanged and bolted together to facilitate the removal of the die. The central shaft of the machine is driven by a pulley and provided with a fly wheel; 80 revolutions of the machine per minute gets contact between the stamps and the die at the top of the circle. At 190 revolutions of the pulley, its capacity is 7½ tons per hour of copper matte from 1½ inches in size to $\frac{1}{16}$ inch. It requires 30 horse power.

Edge Runners.

§ 232. These mills, sometimes also called Edge stone mills, have vertical rollers running in a circular enclosure with a stone or iron base or die. Of them there are two classes: (*a*) Those in which the rollers gyrate around a central axis, rolling upon the die as they go. The Chili mill is the parent of mills of this class. (*b*) Those in which the enclosure or pan revolves and the rollers placed on a fixed axis are in turn revolved by the pan.

The action of the Edge runner combines true grinding or abrasion with true rolling or pressure. The center of the roller is rolling upon the fragments while the two margins are sliding upon them; the outer is sliding forward, the inner backward. The nearer the margin the greater is the grinding action. It can hardly be a matter of doubt that, with light weight rollers, the rolling action, by supporting the weight of the roller, impedes the grinding, and that a roller, with the central part cut away, would grind more rapidly than the usual form. On the other hand, with narrow, heavy weight wheels, where the pressure per square inch is very high, the rolling action is probably fully able to keep up with the grinding. For example T. A. Blake has reported that he tripled the capacity by making the runners narrower, thereby increasing the weight per square inch.

The Chilian form was originally used as a coarse grinder to prepare the ores for the arrastra. The modern forms, however, have been used as fine grinders.

At Guanaxuato, Mexico, there is an example of the primitive form, consisting of a single roller of iron or stone, rolling upon a journal on a short horizontal arm attached to and revolving with a vertical spindle. This short arm passes through the spindle and forms the long arm by which one mule operates the mill. The roller is 5.51 feet in diameter, 1.25 feet face with an iron tire 4 inches thick. It rolls in an annular gutter 1.62 feet wide, paved with iron. The mill ground 91⅓ tons per week, to pass through a brass wire screen, having holes 0.5 or 0.6 inch diameter, at a cost of 56.79 cents per ton.

At the Haile gold mine, North Carolina, a modern Chili mill, shown in Fig. 177, was used. It had two rollers each 4 feet diameter, 8 inches face, weighing about one ton, with hard white-iron tires, 8 inches thick. The distance from outside to outside of the rollers was 50 inches. The central shaft made 40 revolutions per minute, being driven by overhead beveled gears and horizontal pulleys. Its capacity per 24 hours was 90 tons of hard, tough quartzite crushed from ¼ inch diameter through 40 mesh. A trommel was used and the oversize was returned by an elevator. Of soft ores, 240 tons per 24 hours have been crushed. The wear was 12 pounds of iron per ton of ore. The quality of crushing is shown by the following sizing test: On 40 mesh, 8.30%; through 40 on 50 mesh, 5.01%; through 50 on 60 mesh, 1.09%; through 60 on 70 mesh, 3.32%; through 70 on 80 mesh, ——%; through 80 on 90 mesh, 1.66%; through 90 on 100 mesh, 1.66%; through 100 mesh, 78.98%.

C. W. Goodale reports an experiment in Montana in crushing jig middlings through a 100-mesh screen. The mill was 8 feet in diameter, had two rollers,

with 16-inch face, weighing ten tons each and making 12 revolutions per minute. They crushed 1⅛ tons per hour. The speed of crushing was limited by inefficient discharge.

The Edge runner, when grinding clay, has a die perforated with holes through which the crushed material is discharged. The holes are ⅛ inch diameter for hard fireclays and larger for more plastic clays. The Edge runner is used in powder mills, and the rollers are held up from contact with the dies to avoid striking fire. In slow running Edge runners the custom has sometimes been adopted of having the rollers at different distances from the center to distribute

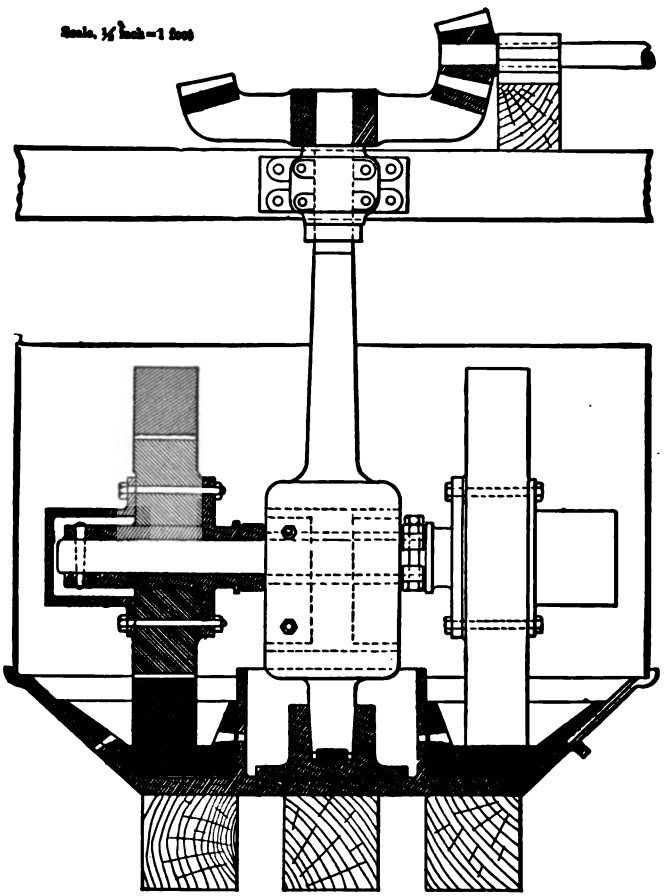

FIG. 177.—SECTION OF CHILI MILL.

the work over a larger die. In fast running machines this would unbalance the machine and is not therefore adopted.

The E. P. Allis Co. make an Edge runner in which the rollers are constructed on the caster principle so that they will adjust themselves automatically.

Chili mills with three rollers, made by L. C. Trent & Co., are used in Mill 49. A 6-foot mill, weighing about 25 tons, takes the ore which has been crushed to ½ inch by breakers and rolls, and reduces it to 60 mesh at the rate of 92.5 tons

in 24 hours when running at 35 revolutions per minute or 62.5 tons when running at 22½ revolutions.

Wethey* increased the capacity of a Trent Chili mill 25% by using moving feed spouts which delivered the ore continuously in front of each roller instead of at a fixed point.

The following sizing tests show the quality of work done by a 5-foot Trent Chili mill on oxidized ore, mainly quartz, crushed to pass through a 30-mesh sieve at the rate of one ton per hour.

	Before Crushing.	After Crushing.
	%	%
On 4 mesh (over 3.99 mm.)	2.00	0.000
Through 4 on 6 mesh (3.99 to 2.79 mm.)	8.00	0.000
Through 6 on 10 mesh (2.79 to 2.01 mm.)	23.55	0.000
Through 10 on 14 mesh (2.01 to 1.40 mm.)	14.50	0.000
Through 14 on 20 mesh (1.40 to 0.99 mm.)	10.35	0.000
Through 20 on 30 mesh (0.99 to 0.61 mm.)	7.15	0.511
Through 30 on 60 mesh (0.61 to 0.25 mm.)	9.45	13.761
Through 60 on 120 mesh (0.25 to 0.119 mm.)	4.50	18.364
Through 120 mesh (0.119 to 0 mm.)	20.50	67.364
Total	100.00	100.000

A very friable lead and silver ore crushed by 15×9-inch Blake breaker, 30×14-inch rolls set at ⅜ inch and a 5-foot Chili mill running at 40 revolutions per minute to pass through an 8-mesh screen at the rate of 4 tons per hour gave the following:

	After the Rolls.	After the Chili Mill.
	%	%
Through 1 on 4 mesh (25.4 to 3.99 mm.)	89.869	0.000
Through 4 on 6 mesh (3.99 to 2.79 mm.)	7.317	0.000
Through 6 on 10 mesh (2.79 to 2.01 mm.)	2.814	0.000
Through 10 on 14 mesh (2.01 to 1.40 mm.)	0.000	7.910
Through 14 on 20 mesh (1.40 to 0.99 mm.)	0.000	11.431
Through 20 on 30 mesh (0.99 to 0.61 mm.)	0.000	11.362
Through 30 mesh (0.61 to 0 mm.)	0.000	69.297
Total	100.000	100.000

The Bryan Roller Quartz Mill.

§ 233. This is an Edge stone mill, with three rollers. The mill is made in two sizes, 4-foot and 5-foot diameter of pan. The former is shown in Fig. 178.

A stationary cylindrical center post stands up in the middle of the pan, to the top of which is keyed a branching support, which carries the two boxes of the horizontal driving shaft. Below this is fastened the horizontal bevel gear which receives power from the pinion. Still lower is fastened the revolving table which carries the three journals of the rollers. The table is capable of vertical adjustment to compensate for the wear of the rollers. The rollers are journalled into the table with ball and socket journals. After each roller are three steel arms carrying wire brushes to distribute the pulp. These may be made to assist or retard the discharge of pulp. Roller tires of rolled steel are used and can be replaced when worn out. The die ring is made of annular sections, also replaceable, in ten parts for the five-foot mill, in eight for the four-foot. Amalgamated plates when used are placed around the conical base of the center post. Table 153 shows details. The 4-foot mill is also made sectional.

* *Eng. and Min. Jour.*, Vol. LXVIII., (1900), p. 8

TABLE 153.—BRYAN MILL.

Size or Diameter of Pan.	Revolutio's of Table per Minute.	Capacity per 24 Hours.	Rollers.			Weight of each Roller Tire.	Total Weight of Dies.	Water Used per Hour.	Horse Power Required.
			Diameter.	Width of Face.	Weight of Each.				
Feet.		Tons.	Inches.	Inches.	Pounds.	Pounds.	Pounds.	Gallons.	
5	40	25 to 35	44	7	3,650	1,100	1,750	400 to 1,000	10
4	60	12 to 20	.....	.....	1,200	875	1,100	300 to 750	5

This mill is especially adapted to crushing jig middlings, and it is also claimed to work well in crushing gold ores preparatory to amalgamation.

Mill 26 uses three 5-foot Bryan mills with three rollers, each weighing 3,800 pounds, making 37 revolutions per minute. Each mill crushes 24 tons in 24 hours. They are fed by Tulloch feeders with jig middlings through 3 mesh, No.

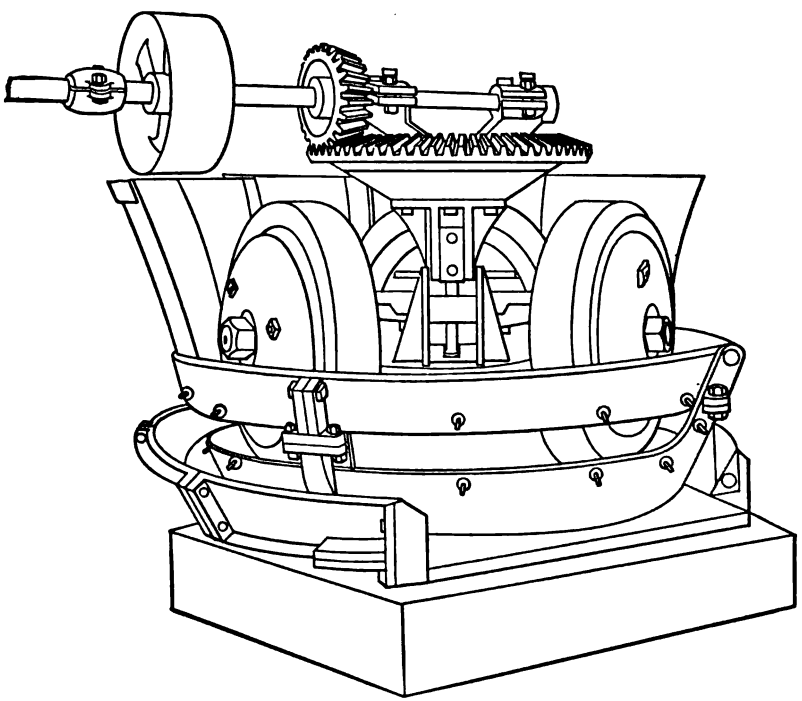

FIG. 178.—PERSPECTIVE VIEW OF BRYAN MILL WITH THE SCREENS AND PART OF CASING REMOVED.

12 B. W. G. wire, and on 14 mesh, No. 22 wire, or in size 0.224 to 0.043 inches. The die ring is made of chilled cast iron, outer diameter 28¾ inches, inner diameter 21¼ inches, thickness 5 inches, weight 1,540 pounds. It costs 5 cents per pound and lasts 10 weeks, crushing 1,700 tons. The wear is 0.906 pound per ton, or 4.53 cents per ton. The roller tires are attached by wooden wedges. Both chilled cast iron and rolled steel have been tried. The outer diameter of tires is 44 inches, inner diameter 36 inches, width of face 7 inches. The three tires weigh 3,268 pounds. Chilled cast iron costs 5 cents per pound and lasts 115 days or 2,760 tons. The wear is 1.18 pounds per ton, or 5.91 cents per ton. Steel tires weigh the same, cost 8.25 cents per pound, last 190 days or 4,560 tons. The wear is 0.7166 pound per ton, or 5.911 cents per ton. Repairs other than

dies and tires amount to $300 per year for each mill or 3.425 cents per ton. The screen is 30-mesh brass cloth, No. 30 B. W. G. wire, making the net size of hole 0.0213 inch. The area of screens is 14×36 inches, and there are two of them in each mill. A set costs $1.40 and lasts 5 days or 120 tons. The cost is 1.166 cents per ton. Collecting the items, we have the following cost per ton: Roller shells, 5.911 cents; die rings, 4.53 cents; repairs, 3.425 cents; screen, 1.166 cents; total for wear and repairs, 15.032 cents; power (estimated), 4.14 cents; total cost, 19.172 cents. It should be said that this mill is located where freights are high. The power required is 7½ indicated horse power. The pulp goes to vanners.

Mill 26 has compared the Huntington and the Bryan types and found that the capacity and power are the same. They both crushed about 1 ton per hour through 30-mesh wire cloth screen. The Bryan mill is more reliable than the Huntington. The Huntington mill requires much closer attention than the Bryan, as it is much more easily deranged by irregularities of feed or water. The wear is much higher and more uneven with the Huntington than with the Bryan. The former is liable to more stoppages and loss of time than the latter. The former throws away, when worn, 50% of the wearing parts, the latter only 25%.

E. A. H. Tays* has given comparative results of the work of stamps and a Bryan mill in crushing and amalgamating a gold ore. One month's record was as follows:

	Batteries No. 1 and 2 (10 Stamps).	Batteries No. 3 and 4 (10 Stamps).	4-Foot Bryan Mill.
Average value of ore per ton	$18.00	$21.72	$22.42
" " " tailings per ton	$4.99	$4.98	$5.28
Percentage of extraction	72%	77.07%	76.45%
Tons crushed during month	743	614	503
Amalgam taken from mortars, in Troy ounces	996.672	925.9409	417.96
" " " apron plates, in Troy ounces	726.928	917.5817	1,129.13
Total amalgam, in Troy ounces	1,723.600	1,843.5226	1,547.09
Approximate value of amalgam	$9,700.42	$10,375.36	$8,706.94
Percentage of amalgam caught in mortar	57.88	50.22	27.02

Batteries No. 1 and 2 used round punched tin screens equivalent to 10-mesh wire screens; 3 and 4 also used tin screens but equivalent to 20-mesh wire screens; the Bryan mill used Russia iron slot punched screens equivalent to 30-mesh wire. The tin screens had a percentage of opening of about 44% while the slotted screen had only about 17%. Tin or fine wire screens did not have the requisite strength to stand the blows of coarse rock in the Bryan mill. All the stamps dropped 7 inches and the height of discharge was 10 inches. Sizing tests of the tailings were as follows:

	Batteries No. 1 and 2.	Batteries No. 3 and 4.	Bryan Mill.
	%	%	%
Through 30 on 40 mesh	0.1225	0.3397	0.6735
" 40 " 50 "	0.3135	0.7895	1.5438
" 50 " 60 "	1.2197	1.3677	3.4360
" 60 " 80 "	3.3865	5.3320	7.9010
" 80 " 100 "	17.8000	7.6282	6.5700
" 100 mesh	77.0778	84.2979	79.7757

This was an old style mill in which a pan above, keyed to the vertical shaft, rested on top of the rollers. Power was applied by a horizontal belt passing

* *Am. Inst. Min. Eng.*, Vol. XXIX., (1899), pp. 776, 1054.

around this pan. A ring on the underside of the pan served to take the wear where the pan traveled upon the rollers. Weights were put in the pan to help the crushing. A new ring weighing 560 pounds and 3 new tires weighing 1,350 pounds total were worn in 156 days to 101 and 235 pounds respectively and were discarded. Dies weighing 994 pounds were worn to 497 pounds in the same time and were put back. The Bryan mill cost for iron and screens $0.175 per ton, while the stamps cost for iron and screens only $0.06 per ton. This is due to the low cost of iron for stamps. The actual wear of iron in 156 days was 3,400 pounds for 10 stamps and only 2,904 pounds for the Bryan mill. To wear evenly the Bryan mill has to be babbitted periodically to keep it running true.

Langley's Improved Dry Crusher.

§ 234. This is a double Edge stone mill, consisting of a pan with two rollers above and a pan with four rollers below. These parts are combined as follows: The vertical main shaft passes down through a hole in the upper horizontal roller shaft, which is fixed. The upper pan is keyed to the main shaft. The four lower rollers are mounted, two on each end of a single shaft which is attached to the under side of the upper pan by bracket hangers. The upper pan and the lower rollers revolve therefore with the shaft. The upper rollers are revolved on fixed horizontal axis by contact with their pan.

The upper rollers weigh 15 cwt. (1,680 pounds) each, with faces 10 inches wide. The lower rollers each weigh 10 cwt. (1,120 pounds) to which may be added as much of the weight of the upper pan and rollers as is desired, the upper pan being partially supported by adjustable rods.

Material from the Blake breaker is crushed in the upper pan down to the size of shot, the lower pan then brings it down to 75 mesh if desired. The mill crushes 3 tons per hour through 50 mesh, consuming 8 to 10 horse power.

The Schranz Mill.

§ 235. This mill acts in a manner similar to rolls in that it crushes ore by pressure. Its construction (see Figs. 179*a* and 179*b*), reminds one somewhat of the Chili mill, but it entirely avoids the grinding action of that machine.

The mill consists of a revolving annular horizontal plate *a* with inner diameter of 450 mm., outer diameter 1,000 mm. and 50 mm. thick, weighing 412 kilos. The plate is slightly conical, sloping outward 1 in 10. It makes 12 to 14 revolutions of the disc per minute and is driven by beveled gears *RR'* which reduce the speed 4 to 1.

Three truncated cones *xyz* with axes at 120° with each other, rest upon the disc with their apexes inward. They have large bases 750 mm. and small bases 475 mm. diameter respectively and 275 mm. slant length. They revolve 30 to 36 times per minute on shafts *X* hinged on adjustable pins *H* at the center and the compression springs *P* are applied at the outer ends. These cones consist of permanent cores mounted on shafts, with bearings at each end and wearing shoes or shells weighing 198 kilos each, which are fastened on the cores by draw bolts and are 55 mm. thick.

The three cones treat the ore successively, the ore being fed in front of the first cone *x*. Each is pressed down by a spring *P* upon the revolving plate with greater force than its predecessor. Thus the particles which fail to be crushed by the first cone may be comminuted by the second or by the third.

Jets of water play upon each cone or upon the disc behind each cone and wash away the finer portions that have been sufficiently crushed. Behind the first and second cones and their water jet are scrapers to bring the ore toward the

center in front of the next cone, counteracting the effect of the water. The mill has no screen and requires a trommel to return the oversize.

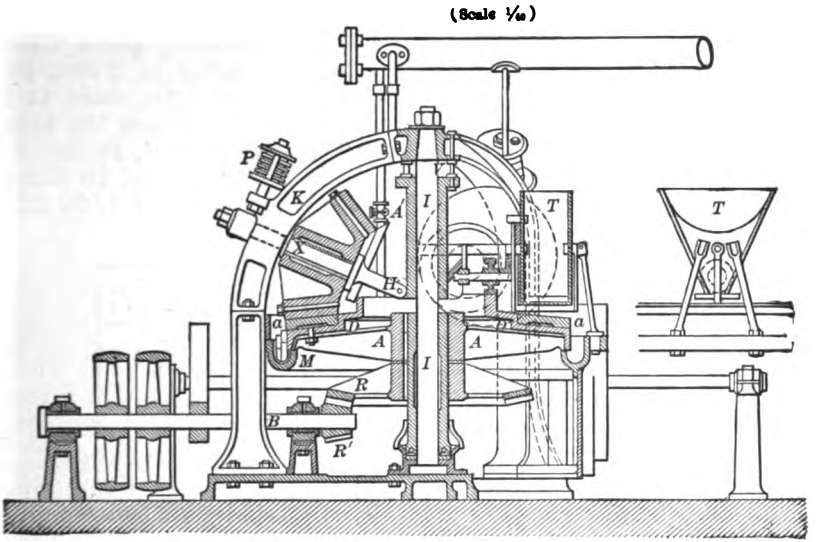

FIG. 179*a*.—SECTION OF SCHRANZ MILL.

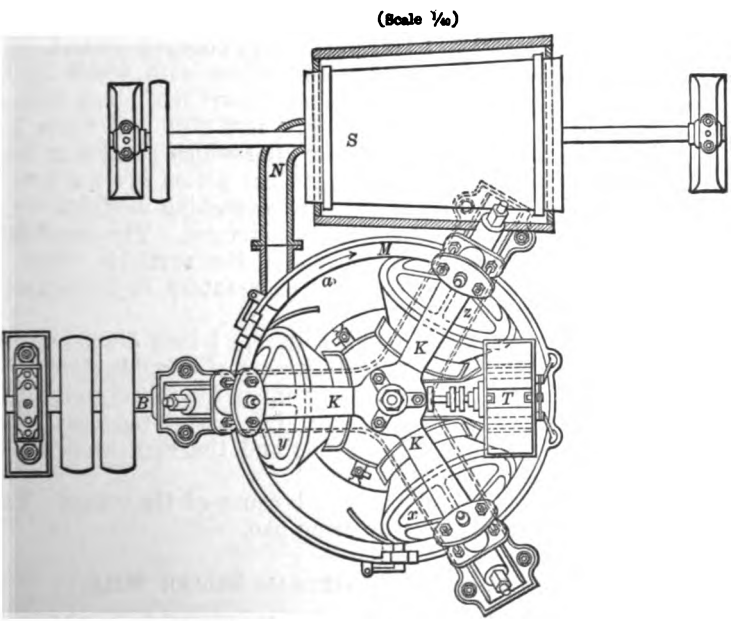

FIG. 179*b*.—PLAN OF SCHRANZ MILL.

The mill is reported as crushing 1,460 kilograms per hour, of stuff through 8 on 3 mm., using 97 liters of water per minute and 3 to 3½ horse power, yielding

the sizes here given: 3.2 to 2.4 mm., 6.95%; 2.4 to 1.6 mm., 21.07%; 1.6 to 0.9 mm., 26.27%; 0.9 to 0.5 mm., 16.92%; 0.5 to 0.2 mm., 15.81%; 0.2 to 0 mm., 12.98%. For other sizing tests, see Table 178. The mill is especially adapted for crushing particles below 15 mm. It does not work so advantageously on larger sizes. Kunhardt says that the mill is not satisfactory above 8 mm.

The wear found at Laurenberg[226] in crushing through 8 on 2 mm. jig middlings, consisting of quartz, spathic iron, galena, blende, etc., down to 2 mm. and less, is reported as follows: The three cones, weighing each 198 kilograms, wore in 982 days of 10 hours each, from 60 mm. thick to 9, 16 and 24 mm. respectively. The disc weighing 412 kilos wore in 613 days of 10 hours from 50 mm. to 15 mm. thick. By computation the wear per ton of 1,000 kilos may be obtained as follows:

	Metal Left Unconsumed.	Net Wear per Ton of 1,000 Kilos.
	Kilos.	Kilos.
Disc	288.5	0.0614
Three cones	161.7	0.0295
Total	.....	0.0609

This is equal to 0.1217 pounds of steel worn per ton of 2,000 pounds. A second instance is given in the same article, of the wear when crushing softer ore, which is 0.035 kilo per 1,000-kilos ton or 0.0718 pound per 2,000-pound ton.

The Kinkead Mill.

§ 236. This is a pan mill (see Fig. 180), with convex conical bottom or die with an apex angle of 145°. Upon this operates a muller or shoe with gross weight of 1,946 pounds, which has two parts, both concave conical. The inner has an apex angle of 82° and a corrugated surface with which to begin the crushing upon the ½-inch feed lumps. The outer part is a much flatter cone or 153° apex angle and does the fine crushing. The mill acts upon a gyratory principle. It has a spindle attached to the muller which gyrates at an angle of 4° away from the the vertical line. The gyratory action gives a true crushing between the shoe and die at the center, but gives crushing modified by a limited amount of grinding between the fine grinding surfaces. The machine has the advantage of a very complete redistribution of the particles after each nip. The mill is adapted for crushing gold ores preparatory to amalgamation and also for crushing jig middlings.

Its capacity is 15 tons in 24 hours, reduced from ½-inch diameter through 40 mesh using 2 horse power. The shoes and dies are of crucible steel. The outer shoes for fine crushing weigh 723 pounds, the inner for coarse weigh 63 pounds. The dies are in three parts: the coarse crushing die at the center weighs 97 pounds, the fine crushing weighs 584 pounds and the vertical side die weighs 238 pounds.

This mill is classified among roller mills because of its action. In form it would appear to belong with the amalgamating pan.

The Huntington Centrifugal Roller Mill.

§ 237. This mill is used to do the work of a stamp mill in crushing gold ores, and serves as a fine grinder for recrushing jig middlings. It is especially adapted for crushing clayey ores.

As shown in Figs. 181*a* and 181*b*, it works upon the principle of Cornish rolls, only with this difference that the angle of nip is much more acute, the

pressure is probably less powerful and the crushing is done under water while rolls crush dry or at most in a running stream of water.

This mill crushes by the centrifugal force of steel rollers revolving against the

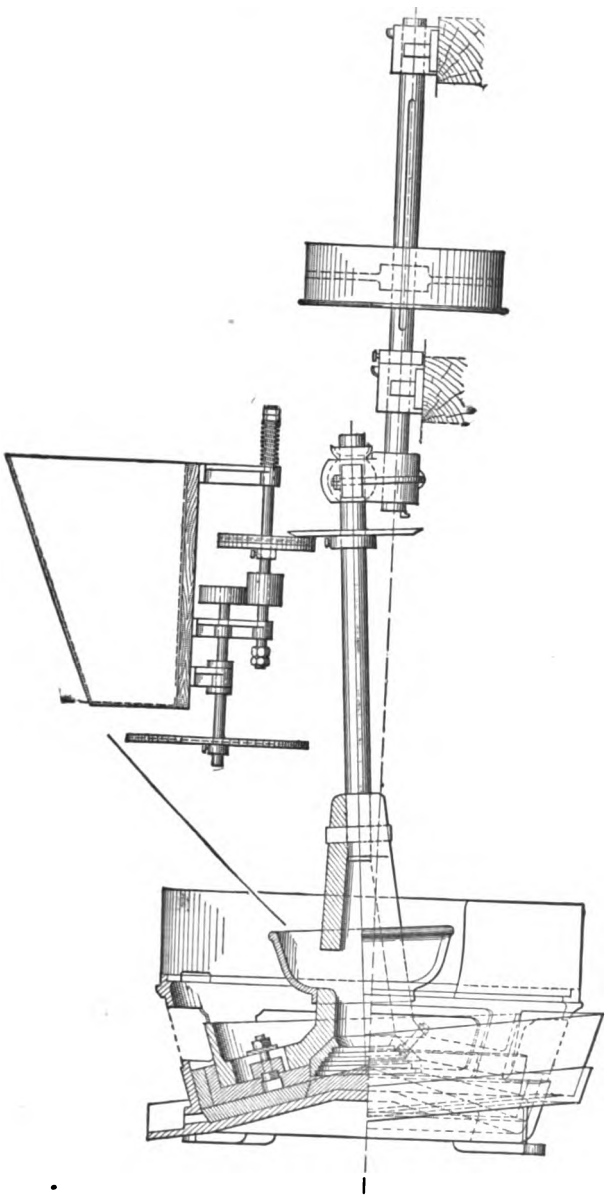

FIG. 180.—HALF ELEVATION AND HALF SECTION OF THE KINKEAD MILL.

inner surface of a heavy horizontal steel ring or die. The rollers are suspended upon rods from horizontal arms by short trunnions allowing a swing of the rod and roller in a direction radial from the central vertical shaft. The vertical

suspending rod is provided with a head at the lower end and the roller has anti-friction washers, babbitted bearings and sleeve permitting free rotation upon it. The roller therefore takes on two classes of motion, namely, gyration around the central shaft and rotation around its suspending rod. Theoretically, the pressure can be increased indefinitely by increasing the speed of rotation, but practically the available pressure is limited by the jar. If the jar was overcome it would still be limited by strength of the die ring. In Table 154 the centrifugal force has been computed by the formula,* $F=\frac{WRN}{2,933}$ where W=weight of roller in pounds; R=radius of gyration in feet; N=revolutions of central shaft per minute; and F=centrifugal force in pounds.

TABLE 154.—CENTRIFUGAL FORCE.

Size of Mill.	Mean Diameter of Die Ring.	Average Diameter of Roller.	Total Weight of Roller Available for Push.	Revolutions of Central Shaft per Minute.	Radius of Gyration.	Effective Push of Roller.
Feet.	Feet.	Feet.	Pounds.		Feet.	Pounds.
3½	3.33	1.219	470	90	1.097	1,373
5	4.75	1.396	506	70	1.677	1,418
6	5.479	1.584	617	65	1.947	1,731

Although the Huntington mill runs on the principle of rolls, it does not have the positive spring of the latter. It follows that it must be even more carefully guarded against large lumps. It is fed with particles not larger than ¾ inch in diameter.

The suspending rods incline inward and downward, causing the roller to be ¼ inch above the bottom at its outer edge and 1¾ inches above the bottom at its inner edge with the new roller. A removable annular disc or false bottom of cast iron is placed in the bottom of the machine to take the wear. The roller may be raised by using more washers above the head. Mercury is fed with ore on the same plan as in the stamp mill. An adjustable scraper is placed in front of each roller to break up the inner bank and throw the ore in front of the roller.

Since the machine has no means in itself of automatic control of a feeder and if overfed is liable to choke, it follows that it must be fed at a regular speed by a Hendy Challenge or a Tulloch feeder run independently. The feeding is done through a hopper at one side.

The advantages claimed for the mill, as compared with gravity stamps, are: Low first cost, less freight charges, small cost of erection, small amount of power and that it is also a good amalgamator. The running cost, however, is high compared with rolls.

C. W. Goodale[245] says that good judgment is necessary to get satisfactory results; any overcrowding of the mill causes the rollers to slip which soon destroys the circular form; it is desirable to have an extra mill owing to the frequent stopping for repairs; in regard to screens it behaves like a stamp mill with high discharge, that is to say, a screen can be used that is larger than the limiting size sought.

The machine runs much like a free crushing roll and hence makes much less slimes than the stamp mill. The mill is made in three sizes (see Tables 154, 155 and 156), 3½, 5 and 6 feet in diameter.

* From Kent's "Mech. Eng. Pocketbook," p. 432.

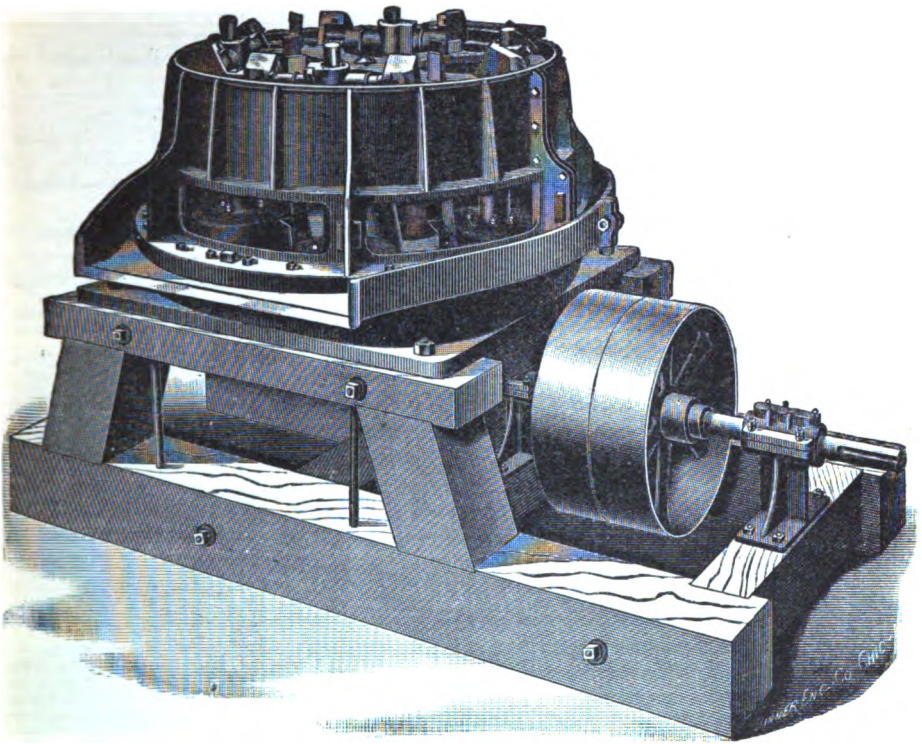

FIG. 181*a*.—PERSPECTIVE VIEW OF THE HUNTINGTON MILL WITH SCREENS REMOVED.

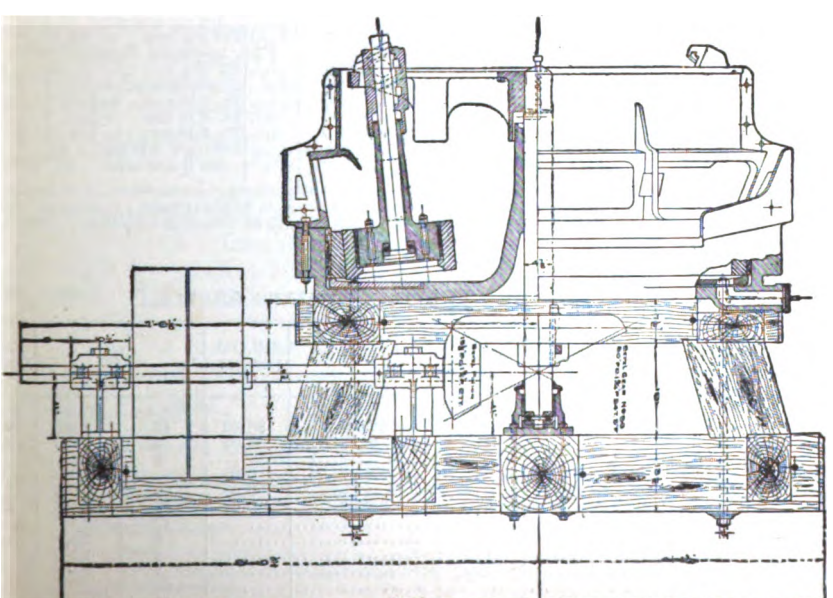

FIG. 181*b*.—HALF SECTION AND HALF ELEVATION OF THE HUNTINGTON MILL.

TABLE 155.—FRASER & CHALMERS FIGURES ON HUNTINGTON MILL.

Size of Mill.	Weight.	Capacity per 24 Hours.	Water Used per Hour.	Horse Power.	Revolutions per Minute.	Size of Feed.	Screen Used
Feet.	Pounds.	Tons.	Gallons.			Inches.	
3½	8,000	12	750	4	90	.....	.....
5	15,000	25	1,000 to 1,200	6	70	¾—0	40 mesh.
6	24,000	.....	.....	8	55	.....	.....

TABLE 156.—FRASER & CHALMERS TABLE OF DIMENSIONS AND WEIGHTS.

Size of Mill.	Die Ring.				Average Outside Diameter of Rollers.	Height of Rollers.	Weight of Roller Shell.	Weight of False Bottom.
	Inside Diameter.	Thickness.	Height.	Weight.				
Feet.	Ft. In.	Inches.	Inches.	Pounds.	Inches.	Inches.	Pounds.	Pounds.
3½	3 4	1¾	5⅝	393	14⅝	6	156	340
5	4 9	2	5¾	652	16¾	6	170	725
6	Top.... 5 5 Bottom 5 6½	2 2¾	8	923	19	8¼	255	1,105

Tabulated data from the mills visited is given in Tables 157 to 159. The life of false bottoms is about a year.

TABLE 157.—PURPOSE, POWER AND CAPACITY.

Abbreviations.—J.M.=Jig middlings; J.T.=Jig tailings; No.=number; Th.=Through; T.T.=Table tailings.

Mill No.	Number of Machines Used.	Size of Machine	Number of Rollers in Each Machine.	Revolutions per Minute.	Feed Material.	Feed Size.	Horse Power Required	Product.	Capacity of Each Machine per 24 Hours.
		Feet.				Mm.			Tons.
(b) 21	2	3½	3	90	J.T. and J.M.	3½ to 12 mesh	6	Th. 0.63 mm.; to No. 2 hydraulic classifier.	15
27	1	5	4	75	J.T.	8.33 to 0	.....	To four 7-belt Woodbury vanners.	.....
(c) 28	1	6	4	68	J.M.	5 to 2	8	Th. 2 mm.; to No. 1 hydraulic classifier.	(a) 24
38	4	5	4	65	J.M.	2½ to 0	.....	Th. 1½ mm.; to No. 3 hydraulic classifier.	90
39	4	5	4	65	J.M.	8½ to 0	.....	Th. 3½ mm.; to No. 3 hydraulic classifier.	100
(d) 44	1	3½	.....	90	J.M.	4.76 to 0	.....	Th. 3.18 mm.; to jigs.	15.2
(d) 44	1	3½	.....	104	J.M.	4.76 to 0	.....	Th. 3.18 mm.; to jigs.	22
(d) 47	1	5	.....	70	J.M.	4.76 to 0	.....	Th. 3.18 mm.; to jigs.	24
86	1	5	4	72	J.T. and T.T.	3 to 40 mesh	.....	Through 0.42 mm.; to No. 5 trommel.	40

(a) 10 tons in 10 hours. (b) Repairs other than tires, rolls and screens, $100 per year. (c) One man attends rolls, feeders, Huntington, and trommels. (d) Letter from F. G. Coggin to Fraser & Chalmers. This mill no longer uses them.

TABLE 158.—DIE RINGS AND ROLLER SHELLS.

Mill No.	Piece.	Material.	Total Weight, New.	Cost, New.	Sell, Old, per Ton.	Life.		Gross Cost per Ton.
			Pounds.			Weeks.	Tons.	Cents.
21	Ring	Rolled steel	400	$29.00	$8.00	12	1,260	2.302
	3 Rollers	" "	300	24.75	8.00	6	630	3.929
27	Ring	" "	.....	.....	.....	4	.....	.....
	4 Rollers	Chilled cast iron.	.....	.....	0.00	.....	.....	.....
28	Ring	Rolled steel.....	.....	$43.40 at Chicago	0.00	52	3,000	1.447
	4 Rollers	Chilled cast steel	.....	$55.00	0.00	43	2,500	2.2
38	Ring	Rolled steel.....	820	.....	.....	12	7,650	.....
	4 Rollers	Steel	560	.....	.....	4	2,520	.....
39	Ring	Rolled steel	610	.....	.....	6	3,500	.....
	4 Rollers	Cast steel.....	560	.....	.....	4	2,800	.....
86	Ring	.....	.....	.....	.....	26	.....	.....
	4 Rollers	.....	.....	.....	.....	13	.....	.....

Digitized by Google

TABLE 159.—SCREENS.

Abbreviations.—B. Sl.=Buhr slot; c. to c.=center to center; Hor. Sl.=Horizontal slot; Hor. St. B. Sl.=Horizontal staggered buhr slot; in.=inch; R. I. Pl.=Russia iron plate; St. Pl.=Steel plate.

Mill No.	Material.	Thickness.	Hole.	Area of each Screen.	Cost per Set.	Life.	Life.	Cost per Ton.
		Inches.		Inches.		Days.	Tons.	Cents.
21	Plate.....	.....	B. Sl., 0.095x0.375 in. (0.63x9.5 mm.) $\frac{3}{16}$ in. apart.	9x21	$1.57	8	120	1.308
27	.....	.....	.....	.....	.....	.....	.....	.....
28	St. Pl....	0.065	0.079 in. (2 mm.) round holes, $\frac{3}{16}$ in. c. to c.	9x30	3.38	24 to 36	240 to 360	1.408 to 0.989
38	St. Pl....	0.049	Slots, 0.059x1½ in. (1.5x38.1 mm.).....	6x28	.....	4	360	.....
39	St. Pl....	0.095	Hor. Sl., 0.1x½ in. (2.5x12.5 mm.) ¼ in. c. to c.	9x30	.....	14	1,400	.....
86	R. I. Pl... (a)	0.097	Hor. St. B. Sl., 0.017x0.375 in. (0.43x9.5 mm.) (b)	8x28	.....	.....	.....	.....

(a) Since writing the above a diagonal slotted screen has been substituted. It is 0.0397 inch thick and has holes 0.0215x0.465 inch (0.55x11.8 mm.). The percentage of opening is 14.33 per cent. This lasts 15 shifts of 12 hours each and keeps its size excellently until worn out by bursting through, which was not the case with the buhr punched screen. Wire screens were found to choke in the Huntington mill, while these thick heavy screens do not. The latter tried in the stamp mill gave trouble from choking. The buhr slot screen when worn out had an opening about 0.030 inch wide and about 8 per cent. opening. (b) This screen has 4.90 per cent. of opening.

The following figures on the estimated cost of crushing by a Huntington mill are given. Since the items may vary widely, it is obvious that these figures should not be too generally applied.

The estimated cost per ton for a 3½-foot mill crushing through $\frac{1}{40}$-inch (0.63-mm.) screen at the rate of 15 tons per 24 hours is:* Die ring, 2.303 cents per ton; rollers, 3.939; power ($40 per 308 days at 15 tons per day), 0.865; screens, 1.308; attendance ($\frac{1}{10}$ man at $3), 2.000; repairs, oil, etc. ($100 per year), 2.165; total, 12.579 cents per ton.

The estimated cost per ton for a 5-foot mill crushing through 0.1 inch (2½ mm.) at the rate of 100 tons per 24 hours is:† Die ring, 1.447 cents per ton; rollers, 2.200; power ($40 per 308 days at 100 tons per day), 0.129; screens, 0.939; attendance ($\frac{1}{10}$ man at $3), 0.300; repairs, oil, etc. ($100 per year), 2.165; total, 7.180 cents per ton.

The Butte and Boston mill, Butte, Montana, found the cost to be 8.8 cents per ton exclusive of power, as against 4.2 cents per ton for rolls at the Colorado Smelting & Mining Co. mill.[245]

A 3½-foot Huntington mill, running at 90 revolutions per minute, gave, when crushing $\frac{3}{16}$-inch conglomerate gravel in the Calumet and Hecla mill through two screens ⅓ inch and one screen $\frac{5}{32}$ inch diameter round holes, a product which by sizing yielded: On 10 mesh, 4.8%; through 10 on 16 mesh, 22.2%; through 16 on 30 mesh, 43.0%; through 30 on 60 mesh, 15.1%; through 60 on 100 mesh, 7.2%; through 100 mesh, 7.7%. The wear of iron was 1.06 pounds per ton of gravel ground. Table 160 shows a few capacities from other sources.[250] All

TABLE 160.—CAPACITIES.

Mine.	Mill Diameter.	Revolutions per Minute.	Screen.	Capacity per 24 Hours.
	Feet.		Mesh.	Tons.
Quaker Mine (a).....	6	50 to 55	25 to 40	15 to 20
Shaw Mine.....	5	50	25 to 30	10 to 12
Mathines Creek.....	5	.....	40	9 to 10
Monte Cristo.....	5	65 to 75	40	24

(a) The ore is of a slaty nature with quartz and a soft gouge.

* Data mostly taken from Mill 21 of preceding tables.

† Data mostly taken from Mill 39 of preceding tables.

four are California mines on or near the mother lode. Schnabel[264] says that a Huntington mill, near Tremnitz, Hungary, crushing quartz with 3% pyrite, 7 to 8 grams gold, and 20 grams silver per 1,000 kilos, fed by a Dodge breaker with lumps 5 cm. and less, and running at 70 revolutions per minute, crushed 12 tons in 24 hours, to pass through slotted screen with 0.8-mm. slots. It required 8 horse power.

The Huntington mill made by Davey Paxman & Co. in England is known as the Paxman mill. It differs from the American design in that the rollers are supported by collars upon the suspending rods instead of by heads at the ends of them.

The Narod Pulverizer.

§ 238. This machine works on the principle of the Huntington mill except that it is driven by a belt and pulley directly upon the central shaft extended upward. There are some differences in the method of suspending the rollers. The chief difference, however, is the high speed of revolution and consequent increase of output due to the increased centrifugal force. Figures given in catalogue, which are backed by testimonials are given in Table 161. The

TABLE 161.—NAROD PULVERIZER.

Capacity per 24 Hours on Quartz.	Horse Power Required.	Revolutions per Minute.	Screen Area.	Weight.	Feed Size.	Screen Used.	Centrifugal Force.
Tons.			Sq. Feet.	Pounds.	Inches.	Mesh.	Pounds.
48 to 96, dry.....	15 to 20	140	12	8,000	¾ to 1	30	8,000
24 to 48, wet.....	15 to 20	140	12	8,000	¾ to 1	30	8,000

weight of the large ring or die is 500 pounds. The three roll shells weigh 210 pounds each and have a total swinging weight of about 300 pounds.

The Griffin Roller Mill.

§ 239. This consists of a single roller 31, suspended upon a vertical axis 1, rolling upon the inside of a die ring 70. (See Fig. 182). Power is applied by a belt to a 30-inch pulley 17, revolving in a horizontal plane and placed centrally over the ring. The pulley has two journals 27 and 26, attached above and below respectively, on which it runs; the supporting step or collar 21 is below the lower bearing; the axis of the roller passes up through the lower journal and is attached to the center of the pulley by a universal joint 9, enabling it to receive rotation from the pulley and also to gyrate in its path around the die ring.

The 30-inch mill weighs 10,500 pounds. The die ring is 30 inches inside diameter and weighs 250 pounds; the roller is 18 to 20 inches in diameter and its shell weighs 100 pounds. The width of contact between roller and die ring is 6 inches. Under the roller are placed plows 5 to keep the ore stirred up. The die ring and shell last 8 to 10 days of 24 hours on the hardest quartz. On phosphate rock they last 7 months of 24 hour days.[274] The plows last the same length of time as the ring and shell. The roller revolves 190 to 200 times per minute on its own axis. The crushing operation is started by pushing the revolving roller out of line until it touches the ring. It immediately bites upon the surface of the latter and the roller then rolls around on the inside of the die ring exerting a presssure, said to be 6,000 pounds, upon it. The number of gyrations per minute of an 18-inch roller will be from 285 to 300 calculated according to the formula $N=\frac{D}{d}-1$ where D is the inside diameter of the ring, d is

the outside diameter of the roller and N is the number of revolutions of the roller on its own axis for one gyration.

The curious fact will be noted that when the roller rotates to the right it will be found to gyrate backward or to the left. The machine is not balanced and therefore requires a very solid foundation; 15 to 25 horse power are required, according to the work it does.

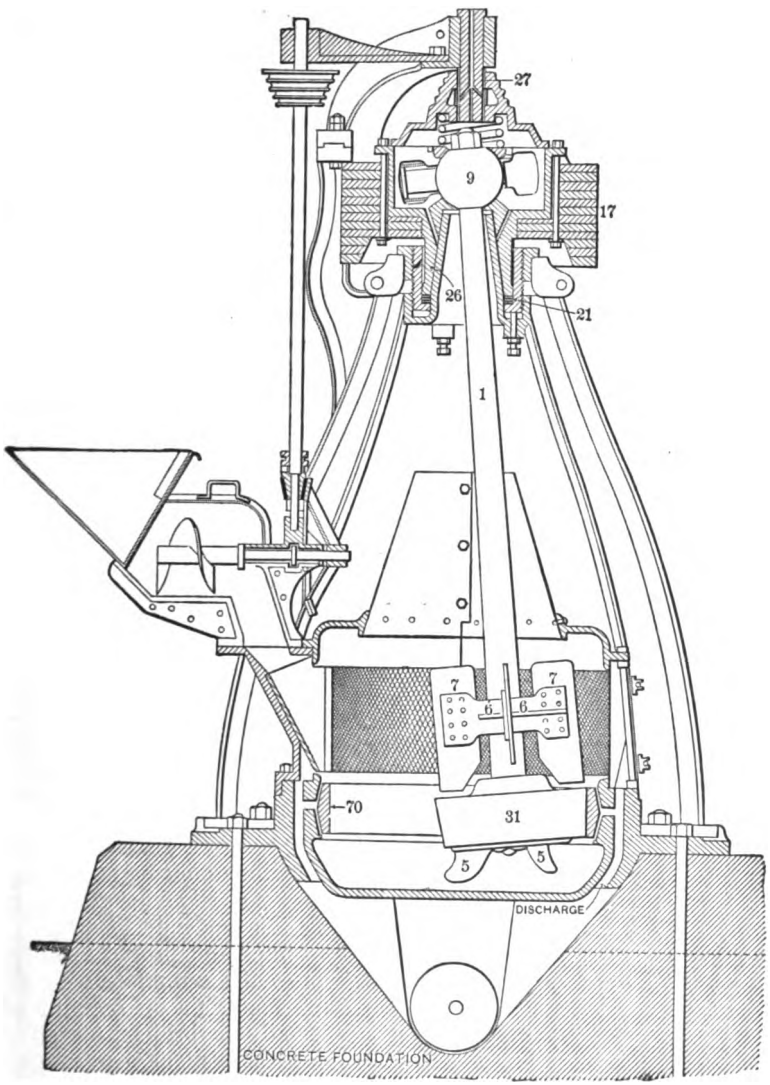

FIG. 182.—SECTIONAL VIEW OF 30-INCH GRIFFIN MILL ARRANGED FOR DRY PULVERIZING.

The mill is fed with stuff 1½ inches maximum diameter from a breaker and is constructed for dry or wet crushing. When used for dry it has fans 7 attached to the suspending rod 1 over the roller which force a current of air out through the screen to the screw conveyor below and dust chamber. When used wet

it has a screen placed all around the mill at a level just above the die ring. The mill is found to crush finer than this screen would indicate, for when a 16-mesh screen was used, 90% of the pulp passed through 60-mesh screen. The 30-inch mill crushed per hour 3 to 4 tons of phosphate rock and 1½ to 2½ tons of Portland cement or hard quartz according to the size.

G. A. Barnhart gives screening test when using 30-mesh screen on gold ore, at Mammoth, Arizona: Through 30 on 40 mesh, 3.90%; through 40 on 60 mesh, 33.62%; through 60 on 80 mesh, 5.54%; through 80 on 100 mesh, 0.67%; through 100 mesh, 56.27%.

J. R. de Lamar says that when fed by breaker each mill crushed 20 tons of the hardest rock in 24 hours to 40 mesh and finer without screening. The screen used was 4 mesh. The mill makes excellent pulp for cyanide leaching, better than either rolls or stamps. With rolls the tailings ran $4.65; with Griffin they ran from $0.89 to $1.65 per ton.

Parkhurst & Whipple say it crushes 40 to 50 tons per day of Breckenridge, Colo., ore, with a cost of wearing parts not to exceed 10 cents per ton. F. M. Johnson, Gunnison, Colo., and J. H. Edwards, Morrisville, Va., both say running cost will not exceed that of a stamp mill.

The Carr Disintegrator.

§ 240. This machine, originally invented in England, is known in the United States as the Stedman, and in Germany as the Brink & Hübner. This is a true impact crusher and consists of several oppositely revolving cages of round bars. Fragments of coal, or other material fed in the center, are struck by the bars of the inner cage, being partly broken, and receive tangential velocity in one direction as they pass outward. The bars of the second cage, revolving rapidly in the opposite direction, meet the particles and strike them blows of double energy. The third and the fourth cages of bars repeat this work, reducing the size of the particles at each cage.

Fig. 183*a* shows the machine in section, which consists of two discs; one carries two cages of forward, the other, two cages of backward revolving bars. Each cage is reinforced by a ring at the opposite end of the bars. Each disc is mounted on a flange with a shaft, two bearings, a pulley and a fly wheel. Fig. 183*b* shows the pillow blocks slipped from their places to allow the discs to be pulled apart for repairs; it also shows the removable housing which has a feed hopper at the side and a delivery spout below.

The Stedman machines are made in five sizes, ranging from 30 to 50 inches in diameter. The bars vary from 1 to 1¾ inches in diameter according to the size of the machine. Steel bars give the best wear. The length of the bars increases outward from the center, diminishing the tendency to clog.

A bar projecting into the inner cage breaks lumps and prevents banks. Two revolving scrapers attached to the outer cage prevent accumulation in the housing. The machine is not suited for very hard materials on account of rapid wear, but it is extensively used for coal, especially in briquet manufacturing, as it is a good mixer for the cementing material as well as a good pulverizer. For coal it should be run dry; not more than 4 or 6% moisture is allowed. With hard substances water may be used and frequent cleaning is then not necessary.

The Carr machine at Ahun collieries, must be cleaned every twelve hours when crushing coal with 3% moisture, every 4 hours with 6% moisture. One half hour is consumed in cleaning. The fineness can be regulated by the speed, and the capacity diminishes with the fineness. The capacity also diminishes with the wear of the bars.

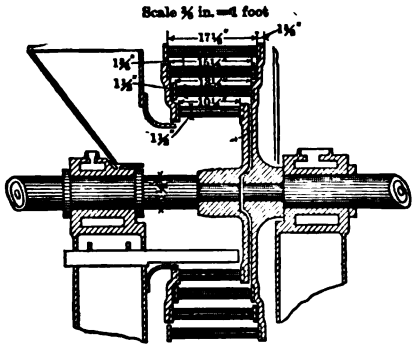

FIG. 183*a*.—SECTION OF STEDMAN DISINTEGRATOR.

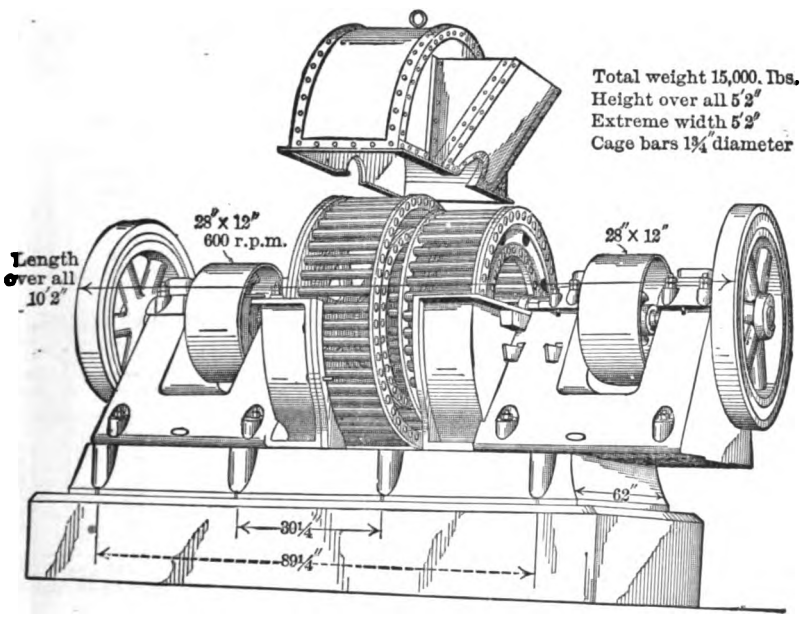

FIG. 183*b*.—PERSPECTIVE OF THE STEDMAN DISINTEGRATOR WITH HOUSING RAISED AND CAGES PULLED APART.

The details of the Carr machine are given in Table 162 and capacities of the Stedman and the Brink and Hübner are given in Tables 163 to 166.

At Eagle, West Virginia, a 48-inch Stedman machine crushes 300 to 350 tons of coal per day of 10 hours to the size of cracked wheat.

TABLE 162.—CARR DISINTEGRATOR.[283]

Ring.	Diameter of Ring.	Number of Bars.	Diameter of Bars. (a)	Length of Bar.	Space Apart of Bars.
	Meters.		Mm.	Mm.	Mm.
First or outer.....	1.2	34	25	300	110.9
Second.....	1.03	31	27	250	104.4
Third.....	0.844	27	30	250	98.2
Fourth.....	0.676	23	35	250	92.3

(a) The bars on the two outer rings are round; those on the two inner are square.

TABLE 163.—CAPACITY OF STEDMAN, CRUSHING FERTILIZERS.

Diameter.	Revolutions per Minute.	Capacity per 10 Hours on Bones	Horse Power Required.
Inches.		Tons.	
50	550	20 to 50	35 to 45
44	550 to 600	12 to 25	25 to 30
40	550 to 600	8 to 25	20 to 25
42	600 to 650	7 to 13	12 to 18
36	600 to 650	6 to 12	12 to 15
30	700	2 to 5	6 to 9

TABLE 164.—CAPACITY OF STEDMAN, CRUSHING COAL.

Diameter.	Capacity per 10 Hours.	Horse Power Required. (a)
Inches.	Tons.	
40	175 to 200	35 to 50
44	200 to 250	40 to 60
50	250 to 400	70 to 100
60	500	100 to 125

(a) 1 horse power per every 4 or 5 tons treated in 10 hours.

TABLE 165.—CAPACITY OF STEDMAN, CRUSHING CLAY.

Diameter.	Revolutions per Minute.	Capacity per 10 Hours.	Horse Power Required.
Inches.			
36	600 to 700	Clay for 15,000 to 25,000 bricks.	12 to 15
40	500 to 550	Clay for 25,000 to 35,000 bricks.	15 to 20

TABLE 166.[293]—CAPACITY OF A BRINK AND HÜBNER AT MANNHEIM. (a)

Kind of Feed.	Size of Feed.	Revolutions per Minute.	Capacity per Hour through 2 mm.	Water per Minute.	Horse Power. (Indicated.)
	Mm.		Kilos.	Liters.	
Jig middlings	4	460	2,300	78	6 to 7
Jig middlings	6	460	1,600	78	6 to 7
Jig middlings	9	460	1,200	78	6 to 7
Blende and lead sand	4	460	3,000	78	8 to 9
Blende and lead sand	6	460	2,700	78	8 to 9
Blende and lead sand	9	460	2,600	78	8 to 9

(a) The diameter of the outer ring of the machine was 800 mm. The product had 67% over 0.35 mm., 12% between 0.35 and 0.1 mm., and 18% below 0.1 mm. Yearly statistics show the wear to be about four times that of rolls.

STURTEVANT MILLS.

§ 241. This consists of a cylindrical die ring *A*, (Fig. 184), with horizontal axis. Entering the two ends of it and facing each other are two cups *D*. These are mounted on horizontal shafts *E* with pulleys *F* and are revolved at high speed, usually in opposite directions. The two cups *D* quickly fill up with compacted crushed rock to conical concave surfaces, and crushing then takes place when ore is fed in through the hopper *G* above by blows received from the cups and from lump hitting lump.

The die ring *A* is made up of small sections, of chilled cast iron, 4 inches wide and 5 inches long, laid around the cylinder. They are perforated with slots $\frac{1}{4}$ inch wide, $3\frac{1}{2}$ inches long, with bars $\frac{9}{16}$ inch thick between them. The upper portion of the die ring is left out to provide for the feed hopper. A housing *H* of cast iron is placed all around the die ring and conveys the crushed ore to the hopper *K* beneath. The air within the housing is exhausted by a suction fan to remove fine dust.

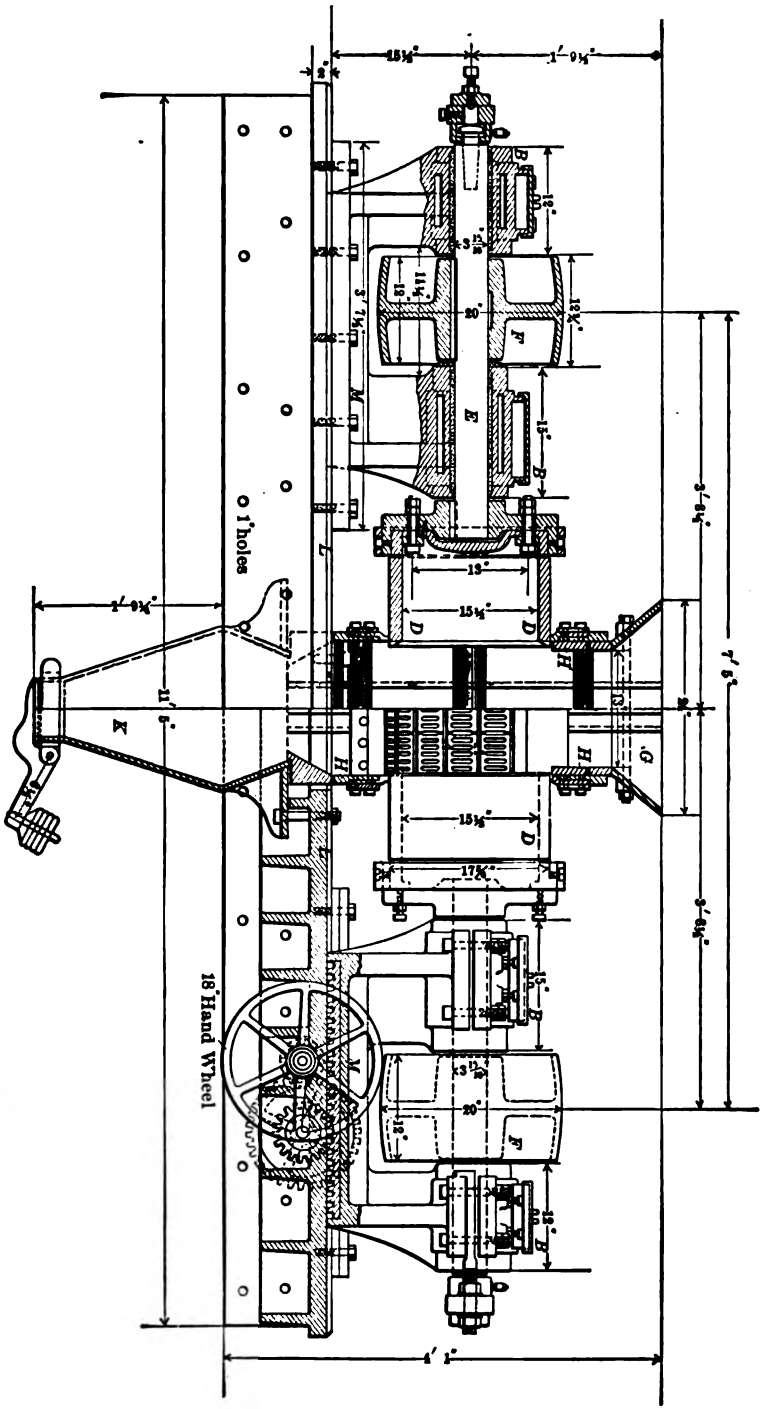

FIG. 184.—HALF SECTION AND HALF ELEVATION OF THE STURTEVANT MILL.

This housing, with its axis lengthwise, is bolted firmly to the center of a long bed plate *L*. The two boxes *B* of each shaft are mounted upon short bed plates *M*, sliding in guides, which are in turn bolted to the long bed plate *L*. This construction gives perfect freedom for sliding the cups with their shafts and bed plates toward the housing for taking up the wear on bushings, which is done about every five hours on hard materials, not for days on some soft materials, or away from the central housing for replacing bushings and screen blocks.

The wear takes place on the ends of the cups *D* and on the chilled sections of the die ring *A*. The former is made good by the use of replaceable bushings, the latter by replacing the die sections when they are worn out. The sizes, speeds, capacities and power required are given in Table 167. On trap, granite and quartzite, J. Heard, Jr. obtained the following in an 8-inch mill: Through 8 on 10 mesh, 7.4%; through 10 on 20 mesh, 19.8%; through 20 on 30 mesh,

TABLE 167.—STURTEVANT MILL.

Diameter of Cup Inside.	Capacity per 24 Hours.	Revolutions per Minute.	Horse Power Required.	Material Crushed.	Size of Feed.	Size of Product.
Inches.	Tons.				Inches.	Mesh.
8	18	1,800	20	Quartz	3	20
12	72	1,200	30	Phosphate	4	10 (a)
	96			Baryta	4	16
	120 to 192			Copper matte	3	8
15	144 to 168	1,000	50	Phosphate	4	10 (a)
	144 to 168			Tin quartz	4	20 (b)
	240			Limestone	4	¼ in.
	240			Iron ore		⅛ in.
	648 to 720			Iron ore	5 to 6	⅛ in.
20	384	850	60 to 75	Ducktown copper ore	5 to 6	16
	288			Phosphate	5 to 6	10 (a)
	168 to 360			N. Y. cement	5 to 6	10

(a) Through 10 on 60 mesh, 40%; through 60 mesh, 60%. (b) Through 20 on 30 mesh, 22.5%; through 30 on 40 mesh, 7.5%; through 40 on 50 mesh, 10.0%; through 50 on 60 mesh, 1.25%; through 60 on 70 mesh, 16.25%; through 70 mesh, 42.50%.

11.5%; through 30 on 40 mesh, 5.0%; through 40 on 50 mesh, 5.0%; through 50 on 60 mesh, 5.0%; through 60 on 70 mesh, 5.0%; through 70 on 80 mesh, 1.6%; through 80 on 90 mesh, 1.7%; through 90 on 100 mesh, 2.5%; through 100 on 120 mesh, 7.0%; through 120 on 140 mesh, 6.5%; through 140 mesh, 22.0%.

The bushings which are 1⅝ inches thick and enter the die ring about 1¼ inches, wear about ⅝ inch per 20 hours when crushing magnetic iron ore or quartz in a 20-inch mill. Hoffman[297] reports that one complete set of bushings and screen blocks, weighing 1,000 pounds for a 20-inch mill, crush 4,000 to 6,000 tons of Port Henry magnetite corresponding to 0.167 pounds of metal worn out per ton of ore crushed. Sahlin[299] claims to have evidence that a set will crush only 600 tons.

The mill is suited only for dry crushing from 4 inches down to 20 mesh. The work of this mill is said to be selective and acts upon the minerals somewhat in proportion to their hardness and tenacity. For example, Wm. Foster found, when working the tin ore of Irish Creek, Va., that the cassiterite, being harder than the gangue rock, had a larger per cent. of coarser grains than the latter. This favored the subsequent concentration. This quality, however, in case of soft ores like galena or chalcopyrite would be adverse to the mill as the softer minerals would probably slime more than the gangue.

Cyclone Pulverizer.

§ 242. This machine consists of two fans, with six arms each, in the form of propeller blades facing one another and making from 1,000 to 3,000 revolutions

per minute in opposite directions. In the earlier form the shafts were inclined upward, in the later they are horizontal. The two fans are placed a few inches apart and a piece of ore fed between them is batted from one to the other, the vortex of air contributing to the crushing action. The disintegration is due to impact. The chamber in which the crushing is done is in the form of two truncated cones, the bases of which are united by a short cylinder; this is made of plate iron and is lined with chilled cast iron liners. The ore is fed by roller feeders and is discharged by a suction fan. The feed should be of nut size. Table 168 shows the details.

TABLE 168.—CYCLONE PULVERIZER.

Size.	Diameter of Fans.	Weight of Replaceable Fan Blades.	Horse Power Running Empty.	Horse Power Crushing.	Capacity per 24 Hours.
	Inches.	Pounds.			Pounds.
1.....	12	2.85	5¼	9½	10,080 of flinty quartz.
2.....	24	13.2	8¾	17	24,720 of plumbago.
3.....	32	22	.....	.....	.....

Bessemer steel with 0.3 to 0.4% carbon has been adopted as best material for blades. On raw heating cinder one set of blades lasted 28,000 pounds, costing 17 cents per ton for wear. The mill is used for crushing talc, graphite, slags, etc., where very fine grinding is desired.

Whelpley and Storer Pulverizer.

§ 243. This is cylindrical in shape with a horizontal shaft revolving 1,025 times per minute. On it are four hubs with six paddles each. The ore is fed at one end through a hopper and passes in front of the paddles of the first three wheels in succession, being broken by impact against the paddles, the shell, and of particle against particle. The fourth paddle wheel is a suction fan drawing a blast of air through the mill and discharging the crushed ore at its circumference through a tangential orifice like that of fan blowers; 15 horse power will crush 18 tons in 24 hours, of which 80% will go through a 100-mesh sieve.

Dr. W. H. Eames' modification of this mill at Wine Harbor, Nova Scotia, is 50 inches in diameter, makes 800 to 880 revolutions per minute and crushes 24 tons per 24 hours of hard dry quartz from 2 mesh through 80 mesh, using 12 horse power. The wear of iron is 3 pounds per ton.

Vapart's Disintegrator.

§ 244. This consists of three rapidly revolving horizontal discs, one above the other, with radial fins on their surfaces. Ore is fed at the center of the top disc and is thrown by centrifugal force against a surrounding ring and broken by impact. The ore is then delivered by a chute to the center of the second disc and is thrown out again. The same action is repeated on the third disc. It is claimed that the impact due to this machine can be so perfectly adjusted that blende, for example, may be broken while pyrite is not, and a sieve will then separate the fine blende from the coarse pyrite. A description of this process of disintegration and screening as used at Lintorf is given in § 615.

Bibliography for Pulverizers other than Gravity Stamps.

Abbreviations:

1. Egleston, T., (1887 and 1890), "Metallurgy," Vol. I., p. 270; Vol. II., pp. 353, 388. Description, capacity, power, wear or cost, method of working, advantages and disadvantages.
2. Gaetzschmann, M. F., (1864), "Aufbereitung," Vol. I., p. 552. Description, capacity and power.

3. Hunt, R., (1884), "British Mining," p. 742. Description, capacity and power.
4. Louis, H., (1894), "Gold Milling," pp. 243, 249. Description, capacity, power and method of working.
5. Phillips, J. A., (1887), "Metallurgy," pp. 685, 791, 793. Description, capacity, wear or cost and method of working.
6. Rose, T. K., (1894), "Gold," p. 87. Description, capacity, wear or cost, method of working and advantages and disadvantages.
7. *Am. Inst. Min. Eng.*, Vol. XI., (1882), p. 63. R. E. Chism. Description, capacity, power, wear or cost and method of working at San Dimas, Mexico.
8. *Berg. u. Hütt. Zeit.*, Vol. LVI., (1897), p. 346. B. Knochenhauer. Description and capacity.
9. *Cal. Bull.*, No. 6, (1895), p. 58. E. B. Preston. Description, capacity, power and method of working.
10. *Cal. Rep.*, Vol. XI., (1891-2), p. 315. J. B. Hobson and E. A. Wiltsee. Description, capacity, wear or cost, method of working, advantages and disadvantages and water used, at Smartsville and Mooney Flat.
11. *Coll. Eng.*, Vol. XVII., (1897), p. 267. H. Van F. Furman. Description and advantages and disadvantages.
12. *Eng. & Min. Jour.*, Vol. XXXIII., (1882), p. 104. M. Rul. Description, capacity, power, method of working and water used, at Guanaxuato, Mexico.
13. *Min. Ind.*, Vol. III., (1894), p. 343. L. Janin, Jr. Description, capacity, wear or cost and method of working.
14. *Min. & Sci. Press*, Vol. LII., (1886), p. 237. No author. Description.
15. *Ibid.*, Vol. LXVII., (1893), p. 277. J. A. Edman. Description, capacity, wear or cost and method of working.
16. *Ibid.*, Vol. LXX., (1895), p. 209. No author. Description, capacity, wear or cost and advantages and disadvantages.
17. *Ibid.*, Vol. LXXIV., (1897), p. 341. No author. Description, capacity, power, wear or cost and method of working.
18. *North Eng. Inst. Min. & Mech. Eng.*, Vol. XLII., (1892-3), p. 87. A. G. Charleton. Description, capacity, wear or cost, method of working and advantages and disadvantages. General article on various processes.
19. *Prod. Gold & Silver in U. S.*, (1880), p. 347. Description, capacity and power of Paul's arrastra.
20. *Tenth U. S. Census*, Vol. XIII., (1880), p. 280. S. F. Emmons and G. F. Becker. Description, capacity, power, wear or cost and advantages and disadvantages.

HOWLAND MILL, No. 2.

21. *Eng. & Min. Jour.*, Vol. XXXIV., (1882), p. 211. No author. Description, capacity and power.

AMALGAMATING PANS:

22. Egleston, T., (1887 and 1890), "Metallurgy," Vol. I., p. 368; Vol. II., p. 526. Description, capacity, wear or cost and method of working, of several pans.
23. Eissler, M., (1896), "Metallurgy Gold," p. 50. Description and method of working, of several pans.
24. *Ibid.*, (1891), "Metallurgy Silver," pp. 62, 119, 340. Description, capacity, wear or cost and method of working, of several pans.
25. Gaetzschmann, M. F., (1864), "Aufbereitung," Vol. I., p. 550. Description of an old form.
26. King, Clarence, (1870), "Geol. Exp. 40th Parallel," Vol. III., pp. 197, 218. Description, capacity and method of working. Elaborate article, on several pans.
27. Lock, A. G., (1882), "Gold," p. 1035. Description, capacity and method of working.
28. Phillips, J. A., (1887), "Metallurgy," p. 706. Description, capacity and method of working, of several pans.
29. Rickard, T. A., (1897), "Stamp Milling," pp. 110, 123, 172. Description, wear or cost, method of working, of several pans.
30. Rose, T. K., (1894), "Gold," p. 155. Description and method of working.
31. *Am. Inst. Min. Eng.*, Vol. II., (1874), p. 159. J. M. Adams. Method of working.
32. *Ibid.*, Vol. VIII., (1880), p. 556. R. P. Rothwell. Capacity, wear or cost and method of working, at Ontario mill.
33. *Ibid.*, Vol. XI., (1882), p. 91. W. L. Austin. Description, capacity and method of working, of Boss system at Harshaw mill.
34. *Ibid.*, Vol. XV., (1887), p. 601. J. A. Church. Method of working at Tombstone.
35. *Ibid.*, p. 733. W. Lindgren. Method of working of Boss system at Calico, Cal.

36. *Ibid.*, Vol. XIX., (1890), p. 195. A. D. Hodges. Description, capacity, wear or cost and method of working. Historical article on Comstock lode.
37. *Ann. des Mines*, Series VII., Vol. VI., (1874), p. 28. P. L. Burthé. Description, wear or cost, method of working and advantages and disadvantages, of the Varney pan.
38. *Berg. u. Hütt. Zeit.*, Vol. XXXIX., (1880), p. 350. T. Egleston. Method of working.
39. *Coll. Eng.*, Vol. XVII., (1897), p. 344. H. Van F. Furman. Description, capacity, and method of working. General article.
40. *Engineering*, Vol. XXVII., (1879), p. 43. T. Egleston. Description and method of working.
41. *Eng. & Min. Jour.*, Vol. XIV., (1872), p. 417. No author. Description of the Wheeler pan.
42. *Ibid.*, Vol. XV., (1873), p. 1. No author. Description of the Horn pan.
43. *Ibid.*, p. 17. No author. Description of the Patton pan.
44. *Ibid.*, Vol. XVII., (1874), p. 305. J. M. Adams. Method of working. Same as *A. I. M. E.*, Vol. II., p. 159.
45. *Ibid.*, Vol. XXXI., (1881), p. 179. W. L. Austin. Method of working of Boss system.
46. *Ibid.*, Vol. XXXIV., (1882), p. 267. F. A. Lowe. Method of working at Batopilas, Mexico.
47. *Ibid.*, p. 308. W. L. Austin. Description, capacity and method of working. Abstract of *A. I. M. E.*, Vol. XI., p. 91.
48. *Ibid.*, Vol. XLIII., (1887), p. 274. J. A. Church. Method of working. Abstract of *A. I. M E.*, Vol. XV., p. 601.
49. *Ibid.*, Vol. LI., (1890), p. 205. A. D. Hodges. Description, capacity, wear or cost and method of working. Abstract of *A. I. M. E.*, Vol. XIX., p. 195.
50. *Ibid.*, Vol. LX., (1895), p. 560. L. W. Tatum. Method of working.
51. *Genie Civil*, Vol. XXV., (1894), p. 116. P. Ferrand. Method of working at Ouro Preto, Brazil.
52. *Inst. Civ. Eng.*, Vol. CVIII., (1892), p. 128. A. H. Curtis. Description of Berdan's pan.
53. *Min. Ind.*, Vol. III., (1894), p. 348. L. Janin, Jr. Method of working.
54. *Min. & Sci. Press*, Vol. LIX., (1889), p. 297. No author. Description of the Boss pan.
55. *Prod. Gold & Silver in U. S.*, (1881), p. 566. C. G. Yale. Description of the Huntington pan.
56. *Raymond's Rep.*, (1870), p. 683. R. W. Raymond. Description of the several pans.
57. *Ibid.*, (1871), p. 395. R. W. Raymond. Description, wear or cost and method of working, of several pans.
58. *Ibid.*, (1873), p. 465. R. W. Raymond. Description and capacity, of several pans.
59. *Ibid.*, (1874), p. 407. J. M. Adams. Method of working. Same as *A. I. M. E.*, Vol. II., p. 159.
60. *Tenth U. S. Census*, Vol. XIII., (1880), p. 258. S. F. Emmons and G. F. Becker. Description, capacity, wear or cost and method of working, of several pans.
61. *Zeit. Berg. Hütt. u. Salinenwesen*, Vol. XXVI., (1878), p. 571. Koch. Description, capacity and method of working, on Comstock lode.

CLEAN UP PAN:
62. Rose, T. K., (1894), "Gold," p. 128. Description.
63. *Cal. Bull.*, No. 6, (1895), p. 29. E. B. Preston. Description, power and method of working.
64. *Coll. Eng.*, Vol. XVII., (1897), p. 302. H. Van F. Furman. Description.

GEIST MILL OR BUHRSTONE MILL:
65. Gaetzschmann, M. F., (1864), "Aufbereitung," Vol. I., p. 538. Description, capacity and power.
66. Hunt, R., (1884), "British Mining," p. 741. Capacity.
67. Rittinger, P. R. von, (1867), "Aufbereitungskunde," p. 52. Description, capacity and power.
68. *Am. Inst. Min. Eng.*, Vol XXI., (1892), p. 587. A. Sahlin. Capacity, power and wear or cost, in grinding talc.

ROCK EMERY MILL:
69. *Eng. & Min. Jour.*, Vol. LXI, (1896), p. 256. No author. Description.

FRÖBEL'S MILL:
70. *Freiberger Jahrb.*, (1880), p. 14. A. F. Wappler. Description, capacity and wear or cost.

CAREY MILL:
71. *Eng. & Min. Jour.*, Vol. XLVII., (1889), p. 119. No author. Description.
KOLSHORN & STRECKER'S GRINDER:
72. *Thon-Ind. Zeit.*, Vol. XX., (1896), p. 714. No author. Description.
CUMMINGS MILL:
73. *Am. Inst. Min. Eng.*, Vol. XXI., (1892), p. 516. C. M. Ball. Description, capacity, power and wear or cost.
CONE MILL:
74. Gaetzschmann, M. F., (1864), "Aufbereitung," Vol. I., p. 567. Description, capacity, power and advantages and disadvantages.
75. Lamprecht, R., (1888), "Kohlenaufbereitung," p. 8. Description, capacity and power.
76. Rittinger, P. R. von, (1867), "Aufbereitungskunde, p. 53. Description, capacity, power and wear or cost.
77. *Am. Inst. Min. Eng.*, Vol. XVI., (1888), p. 681. O. Hoffman. Description of a modified form with very flat cone.
78. *Engineering*, Vol. XV., (1873), p. 375. No author. Description of a mill without teeth.
79. *Eng. & Min. Jour.*, Vol. XXII., (1876), p. 296. No author. Description of a form called Baugh's mill.
80. *Min. & Sci. Press*, Vol. LVIII., (1889), p. 247. No author. Description.
SAMPLE GRINDER:
81. *Coll. Eng.*, Vol. XVII., (1897), p. 267. H. Van F. Furman. Description.
NICHOLAS PULVERIZER:
82. Gaetzschmann, M. F., (1864), "Aufbereitung," Vol. I., p. 564. Description of several mills acting on same principle as Nicholas.
83. Hunt, R., (1884), "British Mining," p. 740. Description, capacity and power. Sizing tests.
84. *Berg. u. Hütt. Zeit.*, Vol. XLIV., (1885), p. 550. B. Kossmann. Description, capacity and power, compared to others.
85. *Rev. des Mines*, Vol. XXI., (1893), p. 311. L. Demaret. Description, capacity and power.
HEBERLI MILL:
86. Bilharz, O., (1896), "Mech. Aufbereitung," Vol. I., p. 126. Description, capacity, power and wear or cost.
87. Kunhardt, W. B., (1884), "Ore Dressing," p. 52. Description, capacity, wear or cost and water used. Quality of crushing.
88. Linkenbach, C., (1887), "Aufbereitung der Erze," p. 42. Description, capacity, power, wear or cost and water used. Comparison with Schranz mill.
89. *Berg. u. Hütt. Jahrb.*, Vol. XXX., (1882), p. 24. J. Habermann. Sieve attachment.
90. *Berg. u. Hütt. Zeit.*, Vol. XXXVII., (1878), p. 159. E. Heberle. Description, capacity, advantages and disadvantages and water used.
91. *Ibid.*, Vol. XL., (1881), p. 154. J. Habermann. Description and advantages and disadvantages. Abstract from *Oest. Zeit.*, Vol. XXVIII.
92. *Ibid.*, p. 400. E. Heberle. Description, capacity, wear or cost, advantages and disadvantages and water used. Results of tests for extraction.
93. *Ibid.*, Vol. XLII., (1883), p. 80. No author. Capacity and wear or cost, at Tarnowitz.
94. *Dingler's Polyt. Jour.*, Vol. 233, (1879), p. 365. No author. Description.
95. *Ibid.*, Vol. 237, (1880), p. 189. No author. Description. Quality of crushing.
96. *Eng. & Min. Jour.*, Vol. XXXII., (1881), p. 371. E. Heberle. Description, and capacity. Abstract from *B. & H. Z.*, Vol. XL., p. 400.
97. *Ibid.*, Vol. LIII., (1892), p. 665. J. W. Meier. Description, capacity, wear or cost and advantages and disadvantages. Abstract from *Oest. Zeit.*, Vol. XXVIII.
98. *Oest. Zeit.*, Vol. XXVI., (1878), p. 233. J. Habermann. Description and capacity of the Dingey mill.
99. *Ibid.*, Vol. XXVIII., (1880), pp. 384, 581, 596. J. Habermann. Description, capacity, wear or cost and water used. Comparison with stamps and Dingey mill.
BOGARDUS MILL:
100. Gaetzschmann, M. F., (1864), "Aufbereitung," Vol. I., p. 544. Description, capacity, power and wear or cost. Elaborate article.
101. *Dingler's Polyt. Jour.*, Vol. LVI., (1835). p. 285. No author. Description.
102. *Ibid.*, Vol. LXX., (1838), p. 343 No author. Description.
103. *Ibid.*, Vol. CIII., (1847), p. 18. No author. Description and advantages and disadvantages.

104. *Ibid.*, p. 312. No author. Capacity.
105. *Ibid.*, Vol. CIV., (1847), p. 18. No author. Capacity and power.
106. *Ibid.*, Vol. CVI., (1847), p. 15. No author. Description, capacity, power and wear or cost.

CUNNACK'S PULVERIZER:
107. Hunt, R., (1884), "British Mining," p. 739. Description, capacity, power and wear or cost. Sizing tests.

DINGEY MILL:*
108. Bilharz, O., (1896), "Mech. Aufbereitung," Vol. I., p. 124. Description and advantages and disadvantages.
109. Hunt, R., (1884), "British Mining," p. 737. Description and capacity.
110. Kunhardt, W. B., (1884), "Ore Dressing," p. 51. Description.
111. *Berg. u. Hütt. Jahrb.*, Vol. XXX., (1882), p. 261. J. Habermann. Capacity, power, wear or cost and water used. Comparison with other mills.
112. *Ibid.*, Vol. XXXI., (1883), p. 207. J. Habermann. Capacity, power, wear or cost and water used. Comparison with other mills.
113. *Eng. & Min. Jour.*, Vol. LIII., (1892), p. 666. J. W. Meier. Description.
114. *Inst. Mech. Eng.*, (1873), p. 131. H. T. Ferguson. Description and capacity, in Cornwall.
115. *Zeit Berg. Hütt. u. Salinenwesen*, Vol. XXVI., (1878), p. 134. E. Althans. Description, capacity, power and advantages and disadvantages. Sizing test.

BUTTER'S PAN:
116. *Min. & Sci. Press*, Vol. LXIII., (1891), p. 285. No author. Description and capacity.

NEUBERBERG'S MILL:
117. *Dingler's Polyt. Jour.*, Vol. 228, (1878), p. 229. No author. Description.
118. *Ibid.*, Vol. 246, (1882), p. 46. No author. Description.

BRÜCKNER BALL MILL:
119. *Zeit. Berg. Hütt. u. Salinenwesen*, Vol. XXXVII., (1889), p. 255. No author. Description, capacity, power and wear or cost.

GRUSON BALL MILL:
120. Bilharz, O., (1896), "Mech. Aufbereitung," Vol. I., p. 110. Description, capacity and power.
121. Davies, E. H., (1894), "Mach. Metal. Mines," p. 245. Description.
122. Eissler, M., (1896), "Metallurgy Gold," p. 148. Description and advantages and disadvantages.
123. Foster, C. Le N., (1894), "Ore & Stone Mining," p. 557. Description.
124. Kirschner, L., (1898), "Erzaufbereitung, p. 68. Description, capacity and power.
125. *Eng. & Min. Jour.*, Vol. LVII., (1894), p. 464. No author. Description.

OTHER BALL MILLS AND TUBE MILLS:
126. Egleston, T., (1887), "Metallurgy," Vol. I., p. 129. Description, capacity and wear or cost, of ball mills as a class.
127. Gaetzschmann, M. F., (1864), "Aufbereitung," Vol. I., p. 591. Description, capacity and power, for several varieties.
128. *Berg. u. Hütt. Zeit.*, Vol. XLVIII., (1889), p. 150. No author. Description of Lohnert's.
129. *Clay Worker*, Vol. XXVI., (1896), p. 442. No author. Description, capacity and power, for Groke's.
130. *Dingler's Polyt. Jour.*, Vol. 306, (1897), pp. 38, 59, 83. L. Sell. Description. Very complete, describing over 20 forms.
131. *Inst. Civ. Eng.*, Vol. CVIII., (1892), pp. 124, 163, 181. A. H. Curtis. Capacity, power and advantages and disadvantages of ball mills as a class.
132. *Min. & Sci. Press*, Vol. LXXV., (1897), p. 386. No author. Description of Paul's.
133. *Oest. Zeit.*, Vol. XXXVIII., (1890), p. 284. A. Gmehling. Description, capacity and power, for Lohnert's.
134. *Ibid.*, Vol. XLV., (1897), p. 328. C. Blömeke. Sizing tests.
135. *Stahl u. Eisen*, Vol. XI., (1891), p. 507. No author. Description of Ehmke's.
136. *Thon-Ind. Zeit.*, Vol. XIX., (1895), p. 397. No author. Description of Lohnert's.
137. *Ibid.*, p. 641. Rasch. Description, capacity and power, of Siller & Dubois.
138. *Ibid.*, p. 642. Foss. Description, capacity, power and wear or cost, of "rohrmühle."
139. *Ibid.*, Vol. XX., (1896), p. 860. No author. Description of Cohn's.

* See also reference 98.

140. *Ibid.*, Vol. XXI., (1897), p. 203. No author. Description of Heinstein's.
141. *Ibid.*, p. 1052. No author. Description and advantages and disadvantages, of a chamber mill.

DODGE MILL:
142. *Eng. & Min. Jour.*, Vol. XLVIII., (1889), p. 501. No author. Description.
143. *Ibid.*, Vol. LXI., (1896), p. 613. No author. Description, capacity and power.
144. *Min. & Sci. Press*, Vol. LXXIII., (1896), p. 71. No author. Description, capacity and power.

LOWE'S MILL:
145. Egleston, T., (1890), "Metallurgy," Vol. II., p. 420. Description, capacity, power and advantages and disadvantages.

MICHELL & TREGONING PULVERIZER:
146. Hunt, R., (1884), "British Mining," p. 738. Description, capacity, wear or cost and water used.

BARTLE PULVERIZER:
147. *Rev. des Mines*, Vol. XXI., (1893), p. 311. L. Demaret. Description, capacity and power.

TUSTIN MILL:
148. Egleston, T., (1890), "Metallurgy," Vol. II., p. 422. Description, capacity and power.
149. *Cal. Rep.*, Vol. VI., (1886), Part 2, p. 41. F. B. Morse. Capacity, power and water used.
150. *Eng. & Min. Jour.*, Vol. XXXVII., (1884), p. 63. L. Wagoner. Description and capacity. Abstract from *Tech. Soc. Pac. Coast.*
151. *Prod. Gold & Silver in U. S.*, (1881), p. 573. C. G. Yale. Description.
152. *Tech. Soc. Pac. Coast*, Vol. III., (1886), p. 45. L. Wagoner. Description, capacity, sizing tests and gold extracted.

NIAGARA CRUSHER:
153. *Coll. Guard.*, Vol. LXX., (1895), p. 652. No author. Description, capacity and power.
154. *Inst. Civ. Eng.*, Vol. CVIII., (1892), p. 127. A. H. Curtis. Description, capacity and power.

CLEAN UP BARREL:
155. *Cal. Bull.*, No. 6, (1895), p. 29. E. B. Preston. Description and power.

ALSING CYLINDER:
156. *Am. Inst. Min. Eng.*, Vol. XXI., (1892), p. 586. A. Sahlin. Description, capacity, power and wear or cost.

FRISBEE LUCOP MILL:
157. Lock, A. G., (1882), "Gold," p. 1029. Capacity and power.
158. *Eng. & Min. Jour.*, Vol. XXXIV., (1882), p. 147. No author. Description, capacity and power, of the Lucop & Cook form.
159. *Ibid.*, Vol. XL., (1885), p. 58. No author. Description, capacity and power.
160. *Ibid.*, Vol. XLIII., (1887), p. 453. No author. Description.
161. *Ibid.*, Vol. LVIII., (1894), p. 320. J. L. Wills. Description.
162. *Thon-Ind. Zeit.*, Vol. XIX., (1895), p. 695. No author. Description, capacity, power and advantages and disadvantages.

WARING PULVERATOR:
163. *Eng. & Min. Jour.*, Vol. XL., (1885), p. 336. No author. Description.
164. *Ibid.*, Vol. XLII., (1886), p. 457. No author. Description.

PLANET MILL:
165. *Eng. & Min. Jour.*, Vol. XLIV., (1887), p. 371. No author. Description, capacity and power.

LION MILL:
166. Davies, E. H., (1894), "Mach. Metal. Mines," p. 241. Description, capacity and power.

CYCLOPS MILL:
167. Eissler, M., (1896), "Metallurgy Gold," p. 146. Description and capacity.
168. Rose, T. K., (1894), "Gold," p. 155. Description and capacity.
169. *Coll. Eng.*, Vol. XVII., (1897), p. 266. H. Van F. Furman. Description and advantages and disadvantages.
170. *Inst. Civ. Eng.*, Vol. CVIII., (1892), pp. 123, 189. A. H. Curtis. Description, capacity and power.

THOMPSON'S PULVERIZER:
171. Lock, A. G., (1882), "Gold," p. 1029. Capacity and power.
172. *Eng. & Min. Jour.*, Vol. XXXIII., (1882), p. 5. No author. Description, capacity and power.

AMERICAN BALL PULVERIZER:
173. *Eng. & Min. Jour.*, Vol. LIV., (1892), p. 297. No author. Description, capacity and power, advantages and disadvantages.
174. *Ibid.*, Vol. LV., (1893), p. 582. No author. Description and capacity.
LAMBERTON MILL:
175. *Inst. Civ. Eng.*, Vol. CVIII., (1892), p. 123. A. H. Curtis. Description.
MOREY & SPERRY PULVERIZER:
176. *Eng. & Min. Jour.*, Vol. XXXV., (1883), pp. 191, 209. No author. Description, capacity, power and water used.
CRAWFORD MILL:
177. Rose, T. K., (1894), "Gold," p. 152. Description and capacity.
178. *Coll. Eng.*, Vol. XVII., (1897), p. 266. H. Van F. Furman. Description and capacity.
179. *Eng. & Min. Jour.*, Vol. LIV., (1892), pp. 82, 99, 147, 195. "Discussion." Description, capacity, wear or cost and advantages and disadvantages.
180. *Inst. Civ. Eng.*, Vol. CVIII., (1892), pp. 145, 184. A. H. Curtis. Description.
181. *Min. & Sci. Press*, Vol. LXX., (1895), p. 247. No author. Description, capacity, power, wear or cost, advantages and disadvantages and water used.
PFEIFFER'S MILL:
182. *Stahl u. Eisen*, Vol. XIV., (1894), pp. 132, 485. F. W. Lührmann. Description, capacity, power and wear or cost.
183. *Thon-Ind. Zeit.*, Vol. XIX., (1895), p. 641. J. Pfeiffer. Description, power and advantages and disadvantages.
184. *Zeit. Ver. Deut. Ing.*, Vol. XXXVIII., (1894), p. 1083. J. Pfeiffer. Description, capacity, power and wear or cost.
MOREL & HALL'S MILL:
185. *Inst. Civ. Eng.*, Vol. CVIII., (1892), p. 124. A. H. Curtis. Description.
JORDAN'S CENTRIFUGAL GRINDER:
186. Foster, C. LeN., (1894), "Ore & Stone Mining," p. 557. Description.
187. Rose, T. K., (1894), "Gold," p. 155. Description.
188. *Inst. Civ. Eng.*, Vol. CVIII., (1892), p. 124. A. H. Curtis. Description.
KINKEAD BALL MILL:
189. *Min. & Sci. Press.*, Vol. LXVI., (1893), p. 163. No author. Description.
EDGE RUNNERS:
190. Bilharz, O., (1896), "Mech. Aufbereitung," Vol. I., p. 76. Description, capacity and power.
191. Egleston, T., (1887), "Metallurgy," Vol. I., p. 269. Description.
192. Foster, C. LeN., (1894), "Ore & Stone Mining," p. 556. Description.
193. Gaetzschmann, M. F., (1864), "Aufbereitung," Vol. I., p. 572. Description, capacity and power.
194. Hunt, R., (1884), "British Mining," p. 741. Capacity.
195. Rittinger, P. R. von, (1870), "Erster Nachtrag," p. 9. Description, capacity, power and wear or cost.
196. *Am. Inst. Min. Eng.*, Vol. VI., (1877), p. 518. R. H. Richards. Description of a laboratory form.
197. *Ibid.*, Vol. XVI., (1888), p. 753. T. A. Blake. Description, capacity, power and wear or cost. Quality of crushing at Haile gold mine.
198. *Ibid.*, Vol. XXIV., (1894), p. 113. O. F. Pfordte. Description and capacity, at Cerro de Pasco, Peru.
199. *Clay Worker*, Vol. XXIII., (1895), p. 48. No author. Description and capacity.
200. *Coll. Eng.*, Vol. XVII., (1897), p. 266. H. Van F. Furman. Description and capacity.
201. *Eng. & Min. Jour.*, Vol. XXIV., (1877), p. 472. R. H. Richards. Description. Same as *A. I. M. E.*, Vol. VI., p. 518.
202. *Ibid.*, Vol. XXXIII., (1882), p. 104. M. Rul. Description and capacity, at Guanaxuato, Mexico.
203. *Iron*, Vol. XXXVIII., (1891), p. 357. No author. Description.
204. *Tenth U. S. Census*, Vol. XIII., (1880), p. 394. S. F. Emmons and G. F. Becker. Description.
BRYAN MILL:
205. *Cal. Bull.*, No. 6, (1895), p. 62. E. B. Preston. Description, capacity, power, wear or cost and method of working.
206. *Coll. Eng.*, Vol. XVII., (1897), p. 266. H. Van F. Furman. Description, capacity and power.
207. *Inst. Civ. Eng.*, Vol. CVIII., (1892), p. 118. A. H. Curtis. Description and capacity.

208. *Min. & Sci. Press*, Vol. LXVI., (1893), p. 339. No author. Capacity.
209. *Ibid.*, Vol. LXX., (1895), p. 193. No author. Description, capacity, power, wear or cost and advantages and disadvantages.
210. *Oest. Zeit.*, Vol. XXXVII., (1889), p. 83. H. Stefan. Description, capacity, power and wear or cost.

LANGLEY'S CRUSHER:
211. *Eng. & Min. Jour.*, Vol. LX., (1895), p. 81. No author. Description, capacity and power.
212. *Ibid.*, p. 582. No author. Description, capacity and power.

MERRALL'S MILL:
213. *Eng. & Min. Jour.*, Vol. LX., (1895), pp. 517,591. No author. Description and capacity.
214. *Min. & Sci. Press*, Vol. LXX., (1895), p. 312. No author. Description and capacity.

WISWELL PULVERIZER:
215. *Eng. & Min. Jour.*, Vol. XXXIX., (1885), p. 403. No author. Description and advantages and disadvantages.
216. *Ibid.*, Vol. XLII., (1886), p. 25. No author. Description and advantages and disadvantages.
217. *Min. & Sci. Press*, Vol. L., (1885), p. 153. No author. Description and advantages and disadvantages.

HANCTIN'S MILL:
218. *Iron*, Vol. VI., (1875), p. 200. No author. Description, capacity and power.

WOOD'S MILL:
219. *Iron*, Vol. XL., (1892), p. 68. No author. Capacity.

COMPOUND EDGESTONE MILL:
220. *Iron*, Vol. XXXVII., (1891), p. 137. No author. Description, capacity and power.

SCHRANZ MILL:
221. Kirschner, L., (1898), "Erzaufbereitung," p. 62. Description, capacity, power, wear or cost and water used. Sizing test.
222. Kunhardt, W. B., (1884), "Ore Dressing," p. 55. Description, capacity, power and water used.
223. *Ann. des Mines*, Series VIII., Vol. XX., (1891), p. 18. M. Bellom. Description, capacity, power and wear or cost.
224. *Berg. u. Hütt. Jahrb.*, Vol. XXXI., (1883), p. 207. J. Habermann. Description, capacity, power and wear or cost. Comparison with other mills.
225. *Berg. u. Hütt. Zeit.*, Vol. XL., (1881), p. 357. C. Blömeke. Capacity, power and wear or cost. Comparison with stamps.
226. *Ibid.*, Vol. XLIII., (1884), pp. 281, 297. C. Blömeke. Description, capacity, power, wear or cost and water used. Comparison with roll and other mills.
227. *Ibid.*, Vol. XLVII., (1888), p. 341. K. von Reytt. Power.
228. *Dingler's Polyt. Jour.*, Vol. 238, (1880), p. 388. No author. Description.
229. *Eng. & Min. Jour.*, Vol. XXXII., (1881), p. 252. C. Blömeke. Abstract of *B. & H. Z.*, Vol. XL., p. 357.
230. *Ibid.*, Vol. LIII., (1892), p. 665. J. W. Meier. Description.
231. *Inst. Civ. Eng.*, Vol. CVIII., (1892), p. 183. A. H. Curtis. Description.
232. *North Eng. Inst. Min. & Mech. Eng.*, Vol. XLIII., (1893-4), p. 342. A. G. Charleton. Description, capacity, power and water used. Sizing tests.
233. *Oest. Zeit.*, Vol. XXXVI., (1888), p. 247. K. von Reytt. Capacity and power. Sizing tests.
234. *Sch. Mines Quart.*, Vol. XIV., (1892), p. 218. M. Bellom. Description, capacity, power and wear or cost. Same as *Ann. des Mines*, Vol. XX., p. 18.
235. *Zeit. Ver. Deut. Ing.*, Vol. XXV., (1881), No. 5.

KINKEAD MILL:
236. *Min. & Sci. Press*, Vol. LXXII., (1896), p. 61. No author. Description and capacity.

LIGHTNER MILL:
237. *Min. & Sci. Press*, Vol. LXX., (1895), p. 149. No author. Description.

HUNTINGTON MILL:
238. Bilharz, O., (1896), "Mech. Aufbereitung," Vol. I., p. 125. Description, capacity and power.
239. Davies, E. H., (1894), "Mach. Metal. Mines," p. 237. Description and advantages and disadvantages.
240. Egleston, T., (1890), "Metallurgy," Vol. II., p. 414. Description, capacity, wear or cost and advantages and disadvantages.

241. Eissler, M., (1896), "Metallurgy Gold," p. 135. Description.
242. Foster, C. LeN., (1894), "Ore & Stone Mining," p. 562. Description of the Paxman mill.
243. Louis, H., (1894), "Gold Milling," p. 258. Description, capacity, power and advantages and disadvantages.
244. Rose, T. K., (1894), "Gold," p. 148. Description, capacity, power, wear or cost and advantages and disadvantages.
245. *Am. Inst. Min. Eng.*, Vol. XXVI., (1896), p. 623. C. W. Goodale. Compared with rolls.
246. *Berg. u. Hütt. Zeit.*, Vol. XLIX., (1890), p. 61. T. Rauft. Description and advantages and disadvantages.
247. *Cal. Bull.*, No. 6, (1895), p. 60. E. B. Preston. Description, capacity, power, method of working and advantages and disadvantages.
248. *Coll. Eng.*, Vol. XVII., (1897), p. 266. H. Van F. Furman. Description, capacity, power and method of working.
249. *Engineering*, Vol. L., (1890), p. 421. No author. Description of the Paxman mill.
250. *Inst. Civ. Eng.*, Vol. CVIII., (1892), pp. 119, 135, 154, 195, 199. A. H. Curtis. Description, capacity, power and wear or cost. Compared to stamps.
251. *Min. & Sci. Press*, Vol. LXIX., (1894), p. 97. No author. Latest improvements.
252. *North Eng. Inst. Min. & Mech. Eng.*, Vol. XLIII., (1893-4), p. 343. A. G. Charleton. Capacity, wear or cost, method of working and advantages and disadvantages.
253. *Zeit. Ver. Deut. Ing.*, Vol. XXXVI., (1892), p. 7. W. Schulz. Capacity, power and wear or cost.
254. *Ibid.*, Vol. XXXVIII., (1894), p. 52. C. Schnabel. Capacity, power and method of working.

HOWLAND PULVERIZER, No. 1:
255. Lock, A. G., (1882), "Gold," p. 1026. Description, capacity and power.
256. *Dingler's Polyt. Jour.*, Vol. 241, (1881), p. 100. No author. Description and capacity.
257. *Eng. & Min. Jour.*, Vol. XXXI., (1881), p. 161. No author. Description, capacity and power.
258. *Inst. Civ. Eng.*, Vol. CVIII., (1892), p. 127. A. H. Curtis. Description.

NABOD PULVERIZER:
259. *Eng. & Min. Jour.*, Vol. XLIX., (1890), p. 732. No author. Description, capacity and power.

PROPFE MILL:
260. *Coll. Guard.*, Vol. LXXI., (1896), p. 846. Kosmann. Description, capacity, power and wear or cost.
261. *Ibid.*, Vol. LXXIV., (1897), p. 165. No author. Description, capacity and wear or cost.
262. *Thon-Ind. Zeit.*, Vol. XX., (1896), p. 581. Kosmann. Description, capacity, power and wear or cost.

FREIDEBERG MILL:
263. *Coll. Guard.*, Vol. LXXI., (1896), p. 846. Kosmann. Description, capacity and power.

TREGONING PULVERIZER:
264. *Rev. des Mines*, Vol. XXI., (1893), p. 310. L. Demaret. Description, capacity and power.

GRIFFIN ROLLER MILL:
265. Bilharz, O., (1896), "Mech. Aufbereitung," Vol. I., p. 125. Description and capacity.
266. *Am. Inst. Min. Eng.*, Vol. XXI., (1892), p. 587. A. Sahlin. Capacity and power. Compared with Buhrstone mill and Cyclone pulverizer.
267. *Cal. Bull.*, No. 6, (1895), p. 64. E. B. Preston. Description and capacity.
268. *Coll. Eng.*, Vol. XVII., (1897), p. 267. H. Van F. Furman. Description.
269. *Eng. & Min. Jour.*, Vol. XLIX., (1890), p. 589. No author. Description, capacity and power.
270. *Ibid.*, Vol. LV., (1893), p. 510. No author. Description.
271. *Iron Age*, Vol. L., (1892), p. 1036. No author. Description.
272. *Thon-Ind. Zeit.*, Vol. XVIII., (1894), p. 425. M. Garn. Description and capacity.
273. *Ibid.*, Vol. XIX., (1895), p. 103. No author. Description and capacity.
274. *Ibid.*, p. 628. Goslich. Description, capacity, power and wear or cost. Compared with Buhrstone mill.
275. *Ibid.*, Vol. XX., (1896), p. 727. No author. Where used.

CARR DISINTEGRATOR:

276. Bilharz, O., (1896), "Mech. Aufbereitung," Vol. I., p. 87. Description, capacity, power and advantages and disadvantages.
277. Foster, C. LeN., (1894), "Ore & Stone Mining," p. 559. Description.
278. Gaetzschmann, M. F., (1872), "Aufbereitung," Vol. II., p. 657. Description, capacity, power and advantages and disadvantages.
279. Goupillière, Haton de la, (1885), "Exploitation des Mines," Vol. II., p. 706. Description, capacity and power.
280. Hunt R., (1884), "British Mining," p. 742. Description, capacity and power, for copper ores.
281. Lamprecht, R., (1888), "Kohlenaufbereitung," p. 11. Description, capacity and power, for coal.
282. Rittinger, P. R. von, (1873), "Zweiter Nachtrag," p. 10. Description, capacity and power.
283. *Ann. des Mines*, Series VII., Vol. VI., (1874), p. 363. A. Pernolet. Description, capacity and power. Compared with rolls.
284. *Bull. Soc. d'Encourag.*, Vol. XVI., (1869), p. 656. M. Carr. Description, capacity and power, for coal.
285. *Bull. Soc. Ind. Min.*, Vol. XV., (1869-70), p. 557. No author. Description and advantages and disadvantages.
286. *Ibid.*, p. 569. F. Robert. Capacity, power and wear or cost, at Ahun collieries.
287. *Coll. Guard.*, Vol. LXXII., (1896), p. 1028. J. Gilchrist. Used for coal.
288. *Dingler's Polyt. Jour.*, Vol. 201, (1871), p. 387. P. Haurez. Description, capacity, power and advantages and disadvantages, for coal.
289. *Engineering*, Vol. XIII., (1872), p. 98. T. Carr. Description and capacity, for flour.
290. *Min. Ind.*, Vol. V., (1896), p. 153. R. Cremer. Used for coal.
291. *Rev. des Mines*, Vol. XXVII., (1870), p. 623. P. Haurez. Description, capacity, power and advantages and disadvantages, for coal.

BRINK & HÜBNER DISINTEGRATOR:

292. Kunhardt, W. B., (1884), "Ore Dressing," p. 54. Description, capacity, power and wear or cost. Comparative tests with other mills.
293. *Berg. u. Hütt. Jahrb.*, Vol. XXX., (1882), p. 261. J. Habermann. Description, capacity and power. Comparative tests with other mills.

STEDMAN DISINTEGRATOR:

294. *Eng. & Min. Jour.*, Vol. LVIII., (1894), p. 129. No author. Description.

STURTEVANT MILL:

295. Foster, C. LeN., (1894), "Ore & Stone Mining," p. 563. Description.
296. *Am. Inst. Min. Eng.*, Vol. XX., (1891), p. 576. W. H. Hoffman. Capacity and power, at Croton iron mines.
297. *Ibid.*, p. 602. W. H. Hoffman. Capacity, power and wear or cost, on magnetite.
298. *Ibid.*, Vol. XXI., (1892), p. 126. W. H. Hoffman. Description, capacity, power and wear or cost, at Croton iron mines.
299. *Ibid.*, p. 521. A. Sahlin. Capacity, power and wear or cost. Compared to rolls.
300. *Ibid.*, p. 530. S. R. Krom. Capacity, power and wear or cost. Compared to rolls.
301. *Ibid.*, p. 533. "Discussion." Capacity and power. Dynamometer tests.
302. *Am. Mfr.*, Vol. XLIX., p. 468. Description, capacity and power.
303. *Eng. & Min. Jour.*, Vol. XXXVIII., (1884), p. 244. No author. Description, capacity and power.
304. *Ibid.*, Vol. XXXIX., (1885), pp. 189, 204, 240, 259, 276. J. Heard, Jr. Capacity and advantages and disadvantages. Sizing tests.
305. *Inst. Civ. Eng.*, Vol. CVIII., (1892), pp. 126, 153. A. H. Curtis. Capacity and power.
306. *North Eng. Inst. Min. & Mech. Eng.*, Vol. XLIII., (1893-4), p. 343. A. G. Charleton. Description, capacity, power and wear or cost. Sizing tests.

CYCLONE PULVERIZER:

307. Foster, C. LeN., (1894), "Ore & Stone Mining," p. 563. Description.
308. *Am. Inst. Min. Eng.*, Vol. XX., (1891), p. 387. A. Sahlin. Description and wear or cost.
309. *Ibid.*, p. 589. "Discussion." Discussion of uses.
310. *Ibid.*, Vol. XXI., (1892), p. 587. A. Sahlin. Capacity and power. Compared to other mills.
311. *Eng. & Min. Jour.*, Vol. XLIII., (1887), p. 312. No author. Description, capacity and power.
312. *Ibid.*, Vol. LVIII., (1894), p. 296. J. T. Donald. Cyclone Fibreizer.

313. *Inst. Civ. Eng.*, Vol. CVIII., (1892), p. 125. A. H. Curtis. Description, capacity and power.
314. *Oest. Zeit.*, Vol. XXXVIII., (1890), p. 582. No author. Description, capacity, power and advantages and disadvantages.
315. *Rev. des Mines.*, Vol. XVIII., (1892), p. 272. A. Gillon. Description and capacity.

LEVIATHAN PULVERIZER:
316. *Inst. Civ. Eng.*, Vol. CVIII., (1892), p. 126. A. H. Curtis. Description.

MEIHE'S PULVERIZER:
317. *Berg. u. Hütt. Zeit.*, Vol. XL., (1881), p. 407. No author. Description.
318. *Dingler's Polyt. Jour.*, Vol. 240, (1881), p. 430. No author. Description.

JORDAN'S PULVERIZER:
319. Lock, A. G., (1882), "Gold," p. 1028. Description.
320. Hunt, R., (1884), "British Mining," p. 740. Description.

WHELPLEY & STORER PULVERIZER:
321. Gaetzschmann, M. F., (1872), "Aufbereitung," p. 656. Description, capacity and power.
322. *Berg. u. Hütt. Zeit.*, Vol. XXXI., (1872), p. 416. No author. Description, capacity, wear or cost.

WALKER PULVERIZER:
323. *Dingler's Polyt. Jour.*, Vol. 253, (1884), p. 111. No author. Description.
324. *Eng. & Min. Jour.*, Vol. XXXVII., (1884), p. 368. No author. Description, capacity and wear or cost.

RYERSON PULVERIZER:
325. *Eng. & Min. Jour.*, Vol. XXX., (1880), p. 397. W. H. Winslow. Description and capacity.

SCHLEUDERMÜHLE:
326. Gaetzschmann, M. F., (1872), "Aufbereitung," p. 654. Description, capacity, power and advantages and disadvantages.
327. Rittinger, P. R. von, (1867), "Aufbereitungskunde," p. 56. Description, capacity, power and wear or cost.

VAPART DISINTEGRATOR:
328. Foster, C. LeN., (1894), "Ore & Stone Mining," p. 607. Separating pyrite from blende.
329. Goupillière, Haton de la, (1885), "Exploitation des Mines," Vol. II., p. 707. Description. Mathematical discussion.
330. *Berg. u. Hütt. Zeit.*, Vol. XL., (1881), p. 294. No author. Description and capacity. Separating pyrite from blende.
331. *Ibid.*, Vol. XLI., (1882), p. 163. No author. Description. Separating pyrite from blende.
332. *Ibid.*, Vol. XLII., (1883), p. 68. No author. Description. Separating pyrite from blende.
333. *Bull. Soc. Ind. Min.*, Series II., Vol. IX., (1880), p. 391. E. Cordier. Description, capacity, power and wear or cost. Mathematical discussion of blow.
334. *Engineering*, Vol. XXXII., (1881), p. 329. No author. Separating pyrite from blende.

GRIFFIN PULVERIZER:
335. *Eng. & Min. Jour.*, Vol. XXXIX., (1885), p. 387. No author. Description, capacity, power and wear or cost.

PROGRESSIVE PULVERIZER:
336. *Eng. & Min. Jour.*, Vol. XL., (1885), p. 23. No author. Description.

BOLZEN-MÜHLE:
337. *Berg. u. Hütt. Zeit.*, Vol. XLVIII., (1889), p. 330. No author. Description.

MAGIC CRUSHER:
338. *Eng. & Min. Jour.*, Vol. LVI., (1893), p. 323. No author. Description.

PNEUMATIC PULVERIZER:
339. *Berg. u. Hütt. Zeit.*, Vol. XLII., (1883), p. 391. No author. Description and capacity.
340. *Engineering*, Vol. XLIV., (1887), p. 38. No author. Description, capacity and power.
341. *Eng. & Min. Jour.*, Vol. XXXIV., (1882), p. 270. No author. Description and capacity.
342. *Ibid.*, Vol. XLIII., (1887), p. 165. No author. Description and capacity.
343. *Industrial Rev.*, Vol. I., (1886), p. 56. Description.
344. *Iron & Steel Inst.*, (1882), Part I., p. 243. No author. Description and capacity.
345. *Inst. Civ. Eng.*, Vol. CVIII., (1892), p. 125. A. H. Curtis. Description.

CHAPTER VII.

LAWS OF CRUSHING.

§ 245. In discussing this question of crushing under different conditions there are four lines to be considered:

(*a*) Compressive strength of stone.
(*b*) Extent of crushing desirable.
(*c*) Work or power required for crushing.
(*d*) Comparison of various machines.

There are also four ways that the force may act in crushing rock: (1) By direct pressure as in rolls where there is a strong force acting at low velocity; (2) by a blow on an anvil as in stamps where there is a medium force acting at a moderate velocity; (3) by a blow in space as in the Carr Disintegrator where there is a weak force acting at high velocity; (4) by grinding as in the amalgamating pan. In the first three cases the force acts perpendicularly to the surface to produce rupture by compression; in the last case it acts obliquely producing rupture by compression combined with shearing.

Compressive Strength of Stone.

§ 246. Watertown Arsenal Tests.—A summary of tests on cubes at the Watertown Arsenal between the years 1884 and 1894 is given in Table 169.

TABLE 169.—WATERTOWN ARSENAL TESTS ON STONE.

Kind of Rock.	Number of Tests.	Compressive Strength in Pounds per Square Inch.		
		Maximum.	Minimum.	Average.
Sandstone	12	10,539	1,215	6,743
Limestone	11	14,500	5,053	11,398
Granite	1	20,415	20,415	20,415
Quartzite	2	21,556	19,875	20,715

The cubes were of various sizes, but it has been found that the crushing strength per square inch does not seem to depend upon the size of the specimen, but rather upon the shape. To illustrate this, Table 170 shows Watertown

TABLE 170.—WATERTOWN ARSENAL TEST ON HAVERSTRAW SANDSTONE.

Cubes.		Prisms.		
Size.	Compressive Strength per Square Inch.*	Section.	Length.	Compressive Strength per Square Inch.
Inches.	Pounds.	Inches.	Inches.	Pounds.
1x1x1	7,083	4x4	1	16,426
2x2x2	6,004	4x4	2	8,086
3x3x3	6,245	4x4	3	6,678
4x4x4	5,962	8x8	3	9,587
5x5x5	6,467	8x8	4	8,550
6x6x6	7,355	8x8	5	7,768
7x7x7	6,156	8x8	6	6,534
8x8x8	6,272	8x8	7	6,613
9x9x9	6,535			
10x10x10	6,584			
11x11x11	6,418			

* Average, 6,457.

Arsenal tests on various sizes of cubes and prisms of Haverstraw sandstone. Each value in the case of cubes is an average of four tests while those for prisms are averages of two tests. The cubes are very nearly of equal strength per square inch while the strength of the prisms increases as the length of the prisms decreases. It will also be noticed that here, as in cubes, those pieces of similar shape but different size have the same strength per square inch; compare the 8×8×4 with the 4×4×2, also the 8×8×6 with the 4×4×3. Unfortunately the series does not extend to the case where the length is greater than the diameter, but it is to be presumed that the law still holds good.

The method of testing is of great importance in obtaining the compressive strength. The maximum strength is obtained where the sample has smooth faces which bear evenly against the smooth pole faces of the testing machine. Thus a 2-inch cube of freestone (sandstone) from Kanawha, Virginia, gave a strength of 9,429 pounds per square inch when the force was applied to its faces, but only 8,604 pounds (calculated on the same sectional area) when the force was applied to two diagonally opposite edges.

§ 247. German Tests.—Very exhaustive sets of tests on various rocks under different conditions have been made abroad at Münich and Berlin. Summaries of them are given in Tables 171 and 172. Including so many tests, as they do, they are of great value. These tests were made on cubes which were as a rule 6 cm. in diameter. The great differences shown between the maximum and minimum are to be expected when one considers that the stones tested came from different localities and varied greatly in quality. Where stones from only one locality are tested, for example as in Table 170, no such differences occur. All the values are for stones that are air dry. In the original reports however, values are given in many cases for the strength when wet and also when frozen both in air and in water. There is little difference between wet and dry, but

TABLE 171.—SUMMARY OF TESTS AT BERLIN.

Class of Stone.	Number of Stones Tested.	Compressive Strength in Pounds per Square Inch.		
		Maximum.	Minimum.	Average.
Sandstone	219	28,218	1,223	7,894
Limestone	258	30,290	768	8,648
Granite	134	28,659	4,850	17,537
Quartzite	11	24,250	8,377	13,754
Porphyry	91	48,216	3,883	26,327
Basalt	8	28,659	11,904	21,349
Diorite	6	21,818	8,818	13,754
Slate	20	15,645	7,936	11,194
Serpentine	4	25,374	14,109	17,840
Trachyte	9	15,546	4,409	8,704
Augite	6	22,046	5,959	12,530

TABLE 172.—SUMMARY OF TESTS AT MÜNICH.

Class of Stone.	Number of Stones Tested.	Compressive Strength in Pounds per Square Inch.		
		Maximum.	Minimum.	Average.
Sandstone	176	29,862	1,322	6,704
Limestone	41	22,752	1,450	10,811
Granite	41	31,426	7,750	18,754
Dolomite	12	18,486	5,546	10,764

frozen stone almost always runs a little lower in strength per square inch than that which is not frozen. In many cases the transverse strength was taken. This was generally found for square beams to be considerably less than half of the compressive strength. The relative strength of cubes and prisms of a sample of sandstone and also of limestone, both air dry, are shown in Table 173.

TABLE 173.—STRENGTH OF CUBES AND PRISMS TESTED AT BERLIN.

Kind of Rock.	Size of Piece Tested. (a) cm.	Number of Tests.	Compressive Strength in Pounds per Square Inch.		
			Maximum.	Minimum.	Average.
Sandstone	10x10x6	10	18,931	17,907	18,476
Sandstone	6x6x6	10	15,318	13,327	14,451
Sandstone	10x10x50	10	12,673	7,922	10,041
Limestone	7.1x7.1x4	10	12,672	12,047	12,360
Limestone	6x6x6	10	8,818	8,164	8,448
Limestone	10x10x50	5	6,742	6,343	6,538

(a) The length is given last.

Table 174 shows how in stratified rocks the strength is less when they are tested parallel than when tested perpendicular to the bedding planes.

TABLE 174.—STRENGTH PARALLEL AND PERPENDICULAR TO THE BEDDING PLANES TESTED AT BERLIN.

Kind of Rock.	Direction of Pressure.	Size of Piece Tested. (a) cm.	Number of Tests.	Compressive Strength in Pounds per Square Inch.		
				Maximum.	Minimum.	Average.
Slate	Parallel to bed	6x6x6	10	10,582	7,936	8,932
Slate	Perpendicular to bed.	6x6x6	10	15,645	11,677	13,455
Limestone	Parallel to bed	6x6x6	10	5,860	4,438	5,230
Limestone	Perpendicular to bed.	6x6x6	10	6,187	5,063	5,708
Limestone.	Parallel to bed	10x10x6	8	6,329	5,632	5,888
Limestone	Perpendicular to bed.	10x10x6	10	7,922	6,742	7,240

(a) In the case of prisms the length is given last.

Four examples to show how the strength decreases when rock is heated and cooled are given in Table 175. These tests were all made on cubes 5 or 6 cm. in diameter.

TABLE 175.—STRENGH BEFORE AND AFTER HEATING, TESTED AT BERLIN.

Kind of Rock.	How Tested.	Number of Tests.	Compressive Strength in Pounds per Square Inch.		
			Maximum.	Minimum.	Average.
Granite	Before heating	10	18,305	16,541	17,551
Granite	After heating 8 hours and slowly cooling	10	12,758	9,700	10,937
Limestone.	Before heating	10	30,280	25,217	27,550
Limestone.	After heating 3 hours and slowly cooling	10	22,842	20,140	21,908
Limestone.	After heating 3 hours and cooling in water.	10	21,733	18,234	20,055
Sandstone	Before heating	10	16,314	14,627	15,369
Sandstone	After heating 8 hours and slowly cooling	5	13,000	11,781	12,388
Sandstone	After heating 8 hours and cooling in water.	5	11,905	10,995	11,378
Porphyry	Before heating	10	37,108	32,183	35,045
Porphyry	After heating and slowly cooling	5	29,186	24,008	26,256
Porphyry	After heating and cooling in water	5	26,098	19,130	22,273

§ 248. CUTTER'S TESTS.—Mr. Geo. A. Cutter in the preparation of his thesis at the Massachusetts Institute of Technology tested rock in an Emery horizontal testing machine using corrugated pole pieces similar to those used on jaw breakers, and also using smooth pole pieces. The results obtained from some old rectangular paving blocks of tough granite are given in Table 176. Two values of pressure are given; the first is that required to make the first break, the second is the maximum load observed while the compression was continued until the samples crumbled. The thickness represents the dimension between the pole pieces. The second and eighth tests were made with smooth pole pieces, the rest with corrugated. The pressures given are total pressures and it will be n that if these were reduced to pressures per square inch of sectional area, the

TABLE 176.—CUTTER'S TESTS ON GRANITE PAVING BLOCKS.

Length.	Height.	Thickness.	Total Load at First Break.	Number of Points of Bearing.	Movement to First Break.	Total Maximum Load.
Inches.	Inches.	Inches.	Pounds.		Inches.	Pounds.
7	6¾	4¾	4,000	1-2	.....	70,000
8	6	4	6,000	3-2	⅜	70,000
7½	6½	4½	10,000	3-2	.....	71,000
6½	6½	3¾	14,600	3-1	¼	55,000
7½	5½	3½	15,000	2-2	.....	38,000
7	6½	4	19,000	3-2	.....	100,000
6½	7	4	20,000	3-2	.....	93,000
8	7	5	46,000	1-2	⅜	46,000
6	6	4½	48,000	3-2	¼	48,000

resulting values would be much lower than those given in previous tables for smooth cubes on smooth pole pieces. The reason for this is given in § 250.

Extent of Crushing Desired.

§ 249. At first sight it would seem desirable to crush rock down to a size which shall be equal to the size of the smallest particle of valuable mineral. This would ensure perfect separation. In practice however there are several objections to this plan. It causes all the coarser particles of valuable mineral and gangue which were unlocked at larger sizes, to be crushed unnecessarily, thereby using an extra amount of power and causing an increase in the amount of slimes which are difficult to separate and which cause loss. This trouble of slimes is aggravated by the fact that in a majority of cases the valuable mineral is softer than the gangue and hence slimes more. This is shown in the following sizing tests.

The first one is of a coarsely crushed Missouri galena-blende ore. The galena appears to be crushed finer than the quartz gangue while the blende appears to be crushed coarser.

	Ore.	Galena.	Blende.
	%	%	%
On 4 mesh (over 5.1 mm.).....	25.0	11.5	16
Through 4 on 8 mesh (5.1 to 2.42 mm.).....	31.1	10.0	40
Through 8 on 10 mesh (2.42 to 1.85 mm.).....	4.9	7.8	4
Through 10 on 20 mesh (1.85 to 0.85 mm.).....	3.8	10.0	16
Through 20 on 30 mesh (0.85 to 0.585 mm.)....	7.3	25.0	8
Through 30 on 40 mesh (0.585 to 0.374 mm.)...	4.3	5.0	4
Through 40 on 80 mesh (0.374 to 0.171 mm.)...	1.4	0.7	4
Through 80 on 100 mesh (0.171 to 0.139 mm.)..	7.0	10.0	4
Through 100 mesh (0.139 to 0 mm.).....	15.0	20.0	4
Total.....	99.8	100.0	100

The second is finely crushed stamp mill pulp in Mill 68. An assay of the stuff before sizing gave 2 ounces gold and 1.7 ounces silver per ton.

	Ore.	Assay for Gold.	Assay for Silver.
	%	Ounces per Ton.	Ounces per Ton.
On 30 mesh.....	0.02	0.03	0.50
Through 30 on 40 mesh....	0.12		
Through 40 on 60 mesh....	9.10	0.10	0.70
Through 60 on 80 mesh....	11 99	1.20	0.90
Through 80 on 100 mesh...	10.16	1.80	1.09
Through 100 mesh.....	68.58	2.00	2.09
Total.....	99.97		

The third is of stamp mill pulp in Mill 55.

	Ore.	Assay for Gold.	Assay for Silver.
	%	Ounces per Ton.	Ounces per Ton.
On 20 mesh	0.02	.....	.....
Through 20 on 40 mesh	18.17	0.25	7.68
Through 40 on 60 mesh	18.93	0.66	8.33
Through 60 on 80 mesh	9.40	0.83	10.17
Through 80 on 100 mesh	4.93	1.20	10.90
Through 100 on 120 mesh	4.96	0.93	11.07
Through 120 on 150 mesh	9.04	1.13	13.53
Through 150 mesh	34.55	0.51	19.64
Total	100.00		

In Mill 92 they have found that the zincite is mostly in the two finest concentrates; garnet goes to fines less than zincite; franklinite less than garnet; willemite, tephroite and fowlerite are about equal to each other, but less than franklinite; calcite forms fines least of all. It might be added that with many ores there seems to be no limit to the fineness of the particles of valuable mineral.

For all these reasons it is an advantage in most cases, except where the mineral is all finely disseminated, to crush first to a much coarser size than the finest particle, then to separate out as much clean mineral and clean gangue as possible, and to recrush the residue. This process can be repeated indefinitely, but in practice the added cost and the mechanical difficulties limit the number of repetitions to one or two. The sizes to be crushed to and the number of repetitions will vary for different ores and can only be determined by experiment. The things to be considered are the quantity and value of the products and the cost of crushing and separating.

For some ores such as free milling gold and silver ores, graphite, cassiterite, etc., it is necessary to crush very fine at the start and in this case there is no repetition. S. I. Hallett of Aspen, Colorado, advocates this method for other ores. He claims that any given ore has its crystals, (not masses of crystals), included within a very limited range of sizes and that by crushing to a size within this range, practically all of the values will be unlocked. He further claims that by the use of a jerking table of the Wilfley type he is able to save the fine stuff which would usually go to waste.

The ideal thing in crushing would be to have every grain of mineral remain intact and be entirely cleaned from all adhering particles of gangue. This is impossible to obtain in practice and there will always be some particles of mineral which have particles of gangue attached to them or which are entirely surrounded by gangue. Such particles are known as attached or included grains and help to make up the middling product in the subsequent separation.

Work Required for Crushing.

§ 250. Rittinger's Theory.—Rittinger has proved mathematically that the work of crushing is proportional to the reduction in diameter. Assume a homo-

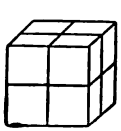

FIG. 185.

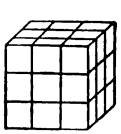

FIG. 186.

geneous 1-inch cube which requires A foot pounds of work to divide it on a plane parallel to one of its faces. To divide it into

8 ½-inch cubes requires 3 planes (see Fig. 185), and work is $3A$ foot pounds;

27 $\frac{1}{3}$-inch cubes requires 6 planes (see Fig. 186), and work is $6A$ foot pounds;
64 $\frac{1}{4}$-inch cubes requires 9 planes and work is $9A$ foot pounds;
125 $\frac{1}{5}$-inch cubes requires 12 planes and work is $12A$ foot pounds;
n^3 $\frac{1}{n}$-inch cubes requires $3(n\text{-}1)$ planes and work is $3(n\text{-}1)A$ foot pounds;
m^3 $\frac{1}{m}$-inch cubes requires $3(m\text{-}1)$ planes and work is $3(m\text{-}1)A$ foot pounds.
The ratio of the work required in two different cases will be as n-1 : m-1 where n and m are the reciprocals of the diameters crushed to. In most cases the values of m and n are large enough so that the 1 can be neglected and the law then stands that the work is very nearly proportional to the reciprocals of the diameters crushed to. Thus to crush a 1-inch cube into $\frac{1}{10}$-inch cubes will require about 5 times as much work as to crush it into $\frac{1}{4}$-inch cubes.

The above figures also show that the work required is proportional to the number of planes of fracture or in other words to the increase in surface of the particles. This gives a measure of the work required where, as is the case in practice, the particles of the product are not cubes, but are of irregular shapes. Rittinger suggested that the increase of surface on irregular shaped grains might be determined by weighing the water necessary for wetting the surface both before and after crushing.

Rittinger's theory explains why the strength of rough granite blocks in Table 176 is so much less than smooth granite cubes in Table 171. In the former case the stones had but a few points of bearing and were split or broken into only a few fragments, while in the latter case the cubes were bearing all over two faces and were more or less crumbled when they broke, thereby requiring more work and consequently more pressure.

§ 251. Von Reytt's Tests.—Von Reytt has recently made an exhaustive series of tests at Przibram to determine how nearly Rittinger's theory holds in practice. The average Przibram ore consists mainly of quartz, calcite, argentiferous galena and blende. The specific gravity of average ore is 3.13 and of calcite 2.75. He first showed that while the adhering moisture is approximately proportional to the amount of surface on coarser particles, it does not hold on particles below 0.35 mm.

He tested crushing in a Blake breaker, in rolls working under various conditions, in a one-runner mill (much like the Heberli mill except that one of the discs is stationary), in a Schranz mill and in gravity stamps. The results of his work are given in Tables 177 and 178. The method of making a test was as follows: Lumps of one size were fed to the machine. The power used was measured over a space of 8 to 15 minutes by means of a Seyss dynamometer, both while crushing and while running empty. The crushed products were carefully sized, as shown in Table 178. The surface of the particles in the coarser sizes was measured directly and the surface of an average particle multiplied by the number of particles in a kilogram gave the surface of a kilogram. From the coarser sizes he was also able to obtain a factor showing the relation of the average particle of any given size to the mean sieve hole, that is, the mean of the sieve hole through which it passed and of that on which it rested. This factor served on the finer sizes to reckon the surface of a kilogram of any size, when the number of particles per kilogram was known. With round hole sieves the surface of a mean particle was 3.4 to 4.2 times the area of the mean sieve hole, or 1.27 times the surface of the mean particle changed to a sphere where the diameter of the sphere was about 0.87 times the diameter of the mean sieve hole. For square hole sieves the surface of a mean particle was 4.0 to 4.2 times the area of the mean sieve hole. The greatest assumption made in the calculation was in putting into one class the finest particles, namely those from 0.1 mm. to 0, and dividing the sum of these diameters by two to get the average diameter. It is of course impossible at this point to obtain a value that is entirely satisfactory.

TABLE 177.—RESULTS OF VON REYTT'S POWER AND SURFACE MEASUREMENTS.

Abbreviations.—H. P.=horse power; Kg.=kilograms; Kgm.=kilogrammeters; Min.=minute; Mm.=millimeters; p.=per; Sec.=seconds; Sq. M.=square meters.

Test Number.	Crushing Apparatus.	Number of Revolutions per Minute.	Size of Feed Lumps.	Work Used per Second.					Stuff Treated per Minute.	100 Kilos.			1 H. P.		Surface.					
				Running Empty.	When Crushing.	For Crushing only.	Gross Horse Power.	Net Horse Power.		Were Treated in	Required Gross Work.	Required Net Work.	Gross	Net	Of the Feed per Minute.	Increase in Crushing on particles above 0.3 mm.	Increase in Crushing on Particles below 0.3 mm.	Increase per Minute per Gross Horse Power.	Increase per Min. p. Net H. P. on grains above 0.3 mm.	Increase per Min. p. Net H. P. on total
											Per Second.		Crushed per Minute.							
			Mm.	Kgm.			H. P.		Kg.	Sec.	Kgm.		Kg.		Sq. M.					
1	Jaw breaker	230	64, ore	177	425	248	5.7	3.3	92.31	65	460	268	16.2	27.9	6.18	29.22	99.98	22.6	9.0	39.0
2	Rolls set close (a)	31	64, ore	202	501	299	6.7	4.0	65.35	92	768	458	9.7	16.3	4.38	42.14	133.39	26.2	10.5	43.9
3	Rolls set close	31	32, ore	202	472	270	6.3	3.6	69.17	87	684	391	10.9	19.2	8.02	42.50	100.85	22.7	11.8	39.9
4	Rolls set close	31	22, ore	202	398	196	5.3	2.6	86.23	70	464	228	16.2	33.0	17.25	49.45	153.41	38.1	19.0	77.7
5	Rolls set close	31	16, ore	202	307	105	4.1	1.4	55.91	107	547	187	13.6	39.9	11.74	35.33	68.31	25.2	25.2	74.0
6	Rolls set close	31	8, ore	202	257	55	3.4	0.72	55.02	109	467	99	16.0	75.3	26.96	28.57	70.24	28.9	39.7	137.2
7	Rolls set close	31	4, ore	202	228	26	3.0	0.33	40.71	147	558	63	13.4	117.4	40.71	9.86	62.40	23.8	29.6	218.9
8	Rolls set close	16	16, ore	119	167	48	2.2	0.64	22.45	267	743	213	10.1	35.0	47.14	15.06	40.50	25.9	23.5	86.8
9	Rolls set close	19	8, ore	119	158	39	2.1	0.52	23.09	260	684	169	10.9	44.4	11.31	11.92	38.94	24.2	22.9	97.8
10	Rolls set close	20	4, ore	119	158	39	2.1	0.52	57.72	104	273	67	27.4	111.0	57.72	6.20	64.83	33.8	11.9	136.6
11	Rolls with 8-mm. space	33	32, ore	111	452	341	6.0	4.6	68.96	87	655	494	11.4	15.2	8.00	41.42	101.89	23.7	9.0	31.5
12	Rolls with 8-mm. space	33	16, ore	111	318	207	4.2	2.8	95.30	63	333	217	22.4	34.5	20.01	44.17	117.65	38.1	15.7	58.5
13	Rolls with 8-mm. space	33	16, calcite	111	302	191	4.0	2.5	64.36	93	468	296	16.0	25.1	16.09	53.37	125.48	44.4	21.3	70.4
14	Rolls with 8-mm. space	15	16, ore	49.5	137	87.5	1.8	1.2	33.23	181	413	263	18.1	28.4	6.98	16.59	34.49	27.9	13.8	43.7
15	Rolls with 8-mm. space	15	16, calcite	49.5	117	67.5	1.6	0.90	21.27	282	551	317	13.4	23.6	5.32	21.45	47.21	44.0	23.8	76.2
16	Rolls with 8-mm. space (b)	15	32, ore	.....	.....	.....	.....	.....	.....	.....	.....	.....	.....	.....	.....	.....	.....	.....	.....	.....
17	Rolls set close	33	8, ore	216	367	151	4.9	2.0	100.86	59	361	149	20.6	50.1	49.42	50.47	146.81	40.3	25.2	98.1
18	Rolls set close	33	8, calcite	216	395	179	5.3	2.4	71.55	84	552	250	13.5	29.9	37.85	70.65	158.69	43.6	29.4	96.3
19	Rolls set close	10	8, calcite	64	105	41	1.4	0.54	12.60	476	833	325	9.0	22.9	6.67	17.43	36.22	38.3	32.3	97.5
20	Rolls strongly compressed	33	8, ore	308	441	133	5.9	1.8	73.13	82	603	181	12.4	41.3	35.83	42.55	174.53	36.9	23.6	122.5
21	Rolls strongly compressed	33	16, calcite	308	505	197	6.7	2.6	43.90	136	1,144	448	6.5	16.7	10.98	62.85	173.22	35.0	24.2	89.8
22	Schranz mill	12½	8, ore	83	202	119	2.7	1.6	12.09	496	1,670	984	4.5	7.6	5.92	16.54	49.10	24.3	10.3	41.2
23	Schranz mill	12½	4, ore	78	163	85	2.2	1.1	11.59	518	1,407	733	5.3	10.2	11.59	10.53	29.75	18.6	9.6	35.6
24	Schranz mill	12½	8, calcite	78	206	128	2.7	1.7	12.69	473	1,623	1,009	4.6	7.4	6.73	36.53	85.50	44.5	21.5	71.7
25	Schranz mill	12½	4, calcite	78	204	126	2.7	1.7	9.78	614	2,087	1,289	3.6	5.8	12.23	20.99	60.25	29.8	12.3	48.4
26	One-runner mill	162	8, ore	164–761	337	173	4.5	2.3	10.91	550	3,090	1,585	2.4	4.7	5.35	9.35	44.74	12.1	4.1	23.3
27	One-runner mill	162	4, ore	164	277	113	3.7	1.5	17.84	336	1,551	633	4.8	11.7	17.84	3.40	106.98	29.8	2.3	72.6
28	One-runner mill	162	8, calcite	300	240	76	3.2	1.0	7.47	803	3,212	1,017	2.3	7.3	3.96	13.27	29.02	13.1	13.3	41.4
29	One-runner mill, strongly compressed	162	8, calcite	374	304	140	4.0	1.9	8.03	747	3,785	1,742	2.0	4.3	4.26	14.74	32.26	11.6	7.7	25.1
30	One-runner mill, strongly compressed	162	4, calcite	412	262	98	3.5	1.3	10.41	576	2,515	941	3.0	7.9	13.01	17.68	21.51	11.2	13.6	29.9
31	20-stamp mill	50	32, ore	.....	789	700	10.5	9.3	8.63	695	9,139	8,108	0.82	0.92	1.00	9.87	182.87	18.3	1.1	20.6
32	20-stamp mill	50	4, ore	.....	789	700	10.5	9.3	11.09	541	7,114	6,312	1.05	1.18	11.09	5.73	194.07	19.0	0.6	21.4
33	20-stamp mill	50	32, stamp ore	.....	789	700	10.5	9.3	12.27	488	6,417	5,260	1.1	1.3	1.42	18.57	194.16	20.2	2.0	22.8
34	20-stamp mill	50	4, stamp ore	.....	789	700	10.5	9.3	18.09	332	4,365	3,873	1.7	1.9	18.09	9.01	290.87	28.5	0.9	32.1
35	Rolls (a)	37	16, ore	109	231	122	3.1	1.6	51	118	454	240	16.2	31.5	.....	.....	.....	.....	.....	.....
36	Rolls	37	12, ore	109	222	113	2.9	1.5	63	95	351	180	21.3	42.3	.....	.....	.....	.....	.....	.....
37	Rolls	37	8, ore	109	203	94	2.7	1.2	75	80	271	125	27.6	60.0	.....	.....	.....	.....	.....	.....
38	Rolls	37	4, ore	109	159	50	2.1	0.66	92	65	172	54	43.4	139.4	.....	.....	.....	.....	.....	.....

(a) The diameter of the rolls in tests 2–21 was 657 mm.; that in tests 35–38 was 520 mm. (b) Power measurement impossible on account of irregular running, due to slow speed.

TABLE 178.—SIZING TESTS OF PRODUCTS OF TABLE 177.

Test Number.	Crushing Apparatus.	Sieve Sizes in mm.																			
		64 to 32 Round.	32 to 22 Round.	22 to 16 Round.	Sum.	16 to 12 Round.	12 to 8 Round.	Sum.	8 to 6 Round.	6 round to 4 Square.	Sum.	4 to 3 Square.	3 to 2 Square.	2 to 1 Square.	Sum.	1 to ½ Square.	½ to ⅛ Square.	Sum.	⅛ to $\frac{1}{16}$ Square.	$\frac{1}{16}$ to 0 Square.	Sum.
		Percents for each Size.																			
1	Jaw breaker	22.35	24.12	18.85	42.97	4.22	10.15	14.37	5.03	1.40	6.43	1.40	1.91	3.60	6.91	1.70	1.94	3.64	1.23	2.10	3.33
2	Rolls set close	6.40	9.96	7.80	17.76	6.51	21.77	28.28	9.21	5.70	14.91	8.00	5.03	6.13	19.16	3.56	3.83	7.39	2.10	4.00	6.10
3	Rolls set close	.....	10.00	7.46	17.46	10.56	26.75	37.31	7.30	8.14	15.44	5.90	4.95	7.45	18.30	3.40	3.71	7.11	1.55	2.83	4.38
4	Rolls set close	.....	.....	11.20	11.20	6.06	29.40	35.46	12.42	5.86	18.28	10.90	3.51	8.50	22.91	3.30	3.65	6.95	1.64	3.56	5.20
5	Rolls set close	.....	.....	.....	.....	11.64	25.18	36.82	17.27	11.79	29.06	11.29	5.24	5.70	22.23	3.80	4.14	7.94	1.70	2.25	3.95
6	Rolls set close	.....	.....	.....	.....	.....	.....	.....	19.60	39.40	59.00	14.62	9.40	7.90	31.92	2.52	2.80	5.32	1.24	2.52	3.76
7	Rolls set close	.....	.....	.....	.....	.....	.....	.....	.....	.....	.....	57.82	20.15	10.20	88.20	3.70	3.30	7.00	1.97	2.83	4.80
8	Rolls set close	.....	.....	.....	.....	8.93	26.40	35.33	15.61	10.50	26.11	9.65	7.45	7.75	24.85	4.16	4.00	8.16	2.10	3.45	5.55
9	Rolls set close	.....	.....	.....	.....	.....	.....	.....	15.50	43.90	59.40	15.80	5.20	8.20	29.20	3.00	2.60	5.60	3.00	2.80	5.80
10	Rolls set close	.....	.....	.....	.....	.....	.....	.....	.....	.....	.....	63.40	20.00	7.40	90.80	3.05	2.65	5.70	1.40	2.10	3.50
11	Rolls with 8-mm. space	.....	7.83	2.69	10.52	14.27	24.70	38.97	16.11	5.40	21.51	8.00	3.40	6.10	17.50	3.60	3.40	7.00	1.67	2.83	4.50
12	Rolls with 8-mm. space	.....	.....	.....	.....	18.81	34.25	53.06	13.92	9.31	23.23	6.61	2.95	4.72	14.28	2.70	2.93	5.63	1.40	2.40	3.80
13	Rolls with 8-mm. space	.....	.....	.....	.....	9.42	30.24	39.66	15.80	11.91	27.71	10.82	3.50	7.94	22.26	3.23	3.11	6.34	1.60	2.43	4.03
14	Rolls with 8-mm. space	.....	.....	.....	.....	21.47	33.10	54.57	10.34	10.15	20.49	9.17	2.04	4.07	15.28	3.41	2.91	6.32	1.47	1.87	3.34
15	Rolls with 8-mm. space	.....	.....	.....	.....	8.00	25.90	33.90	16.90	9.40	26.30	14.10	3.32	8.35	25.77	4.90	4.24	9.14	2.34	2.55	4.89
16	Rolls with 8-mm. space	.....	9.10	2.72	11.82	12.72	18.18	30.90	20.00	6.36	26.36	9.10	0.72	6.54	16.36	3.30	4.00	7.30	2.72	4.54	7.26
17	Rolls set close	.....	.....	.....	.....	.....	.....	.....	28.70	29.70	58.40	19.50	3.20	7.74	30.44	3.45	3.20	6.65	1.80	2.71	4.51
18	Rolls set close	.....	.....	.....	.....	.....	.....	.....	28.81	16.50	45.31	23.00	7.14	10.00	40.14	4.90	4.90	9.80	2.11	2.64	4.75
19	Rolls set close	.....	.....	.....	.....	.....	.....	.....	14.50	14.66	29.16	24.76	10.50	14.66	49.92	7.80	6.50	14.30	3.52	3.10	6.62
20	Rolls strongly compressed	.....	.....	.....	.....	.....	.....	.....	28.25	13.84	42.09	25.02	6.46	8.76	40 24	4.90	4.73	9.63	4.00	4.04	8.14
21	Rolls strongly compressed	.....	.....	.....	.....	3.41	4.74	8.15	10.44	31.51	41.95	8.00	16.64	13.00	27.64	7.21	6.90	14.11	3.22	4.93	8.15
22	Schranz mill	.....	.....	.....	.....	.....	.....	.....	.....	.....	3.50	7.90	10.90	33.10	51 90	16.20	14.10	30.30	7.80	6.50	14.30
23	Schranz mill	.....	.....	.....	.....	.....	.....	.....	.....	.....	.....	7.30	5.70	39.40	62.40	18.20	9.60	27.80	6.30	3.50	9.80
24	Schranz mill	.....	.....	.....	.....	.....	.....	.....	.....	.....	1.40	5.30	5.80	35.00	46.10	21.40	15.80	37.20	7.70	7.60	15.30
25	Schranz mill	.....	.....	.....	.....	.....	.....	.....	.....	.....	.....	9.00	4.80	36.70	50.50	19.90	15.70	35.60	6.90	7.00	13.90
26	One-runner mill	.....	.....	.....	.....	.....	.....	.....	.....	.....	10.60	36.10	11.60	14.10	61.80	6.80	8.50	15.30	4.40	7.90	12.30
27	One-runner mill	.....	.....	.....	.....	.....	.....	.....	.....	.....	.....	30.80	23.60	22.70	77 10	3.90	3.50	7.40	2.10	13.40	15.50
28	One-runner mill	.....	.....	.....	.....	.....	.....	.....	.....	.....	6.80	32.30	13.20	21.40	66 90	8.70	8.60	17.30	4.90	4.10	9.00
29	One-runner mill, strongly compressed	.....	.....	.....	.....	.....	.....	.....	.....	.....	4.20	37.00	10.20	20.60	67.80	9.30	9.60	18.90	4.60	4.50	9.10
30	One-runner mill, strongly compressed	.....	.....	.....	.....	.....	.....	.....	.....	.....	.....	43.60	20.60	20.30	84.50	6.20	4.50	10.70	2.60	2.20	4.80
31	20-stamp mill	.....	.....	.....	.....	.....	.....	.....	.....	.....	.....	.....	.....	5.30	5.30	9.20	22.05	31.25	18.40	45.05	63.45
32	20-stamp mill	.....	.....	.....	.....	.....	.....	.....	.....	.....	.....	.....	.....	13.80	13.80	12.10	24.60	36.70	13.20	36.30	49.50
33	20-stamp mill	.....	.....	.....	.....	.....	.....	.....	.....	.....	.....	.....	.....	11.90	11.90	15.40	25.10	40.50	16.90	30.70	47.60
34	20-stamp mill	.....	.....	.....	.....	.....	.....	.....	.....	.....	.....	.....	.....	20.00	20.00	12.80	20.40	33.20	14.40	32.40	6.80

All conclusions were based on gross power since the figures given in Table 177 for net power obtained by subtracting the power when running empty from the gross power, do not properly express the power applied to crushing.

The conclusions arrived at were that the ratio of work done to increase of surface is fairly constant with coarser sizes, but with finer sizes the increase of surface is much more rapid than the work required to produce it. For Przibram ore he advanced the conclusion that the increase of surface per horse power varies between 20 and 40 square meters and approaches an average of 25 square meters only under similar conditions of crushing when the quantities of feed are chosen to correspond, since the power used is dependent upon, but is not proportional to the amount of feed.

Incidentally the work brought out the following additional facts. It should be borne in mind that in his tests the rolls were all doing free crushing. Slow running rolls produce more fines than fast running, the quantity of returns to be recrushed being the same and the capacity per horse power less with the slow rolls. With spaced rolls crushing moderately fine material the quantity of returns is considerably higher than with close rolls, the amount of fines being the same and the capacity per horse power higher in the former case. Spaced rolls are to be recommended for coarse crushing only. Spaced rolls counteract the tendency of slow running to produce fines. For economy rolls should be run as nearly to full capacity as possible since the capacity per gross horse power increases with the increased capacity. Strongly compressed rolls increase fines, decrease the returns and reduce the capacity per horse power. The Schranz mill produces less returns and more fines than rolls, but rolls would give just as many fines if the extra amount of returns was recrushed. The one-runner mill gives more returns and less fines than the Schranz and has less capacity per horse power. Stamps give no returns, produce the most fines and have the least capacity per gross horse power. The most economical crushing machine is that which keeps the amount of returns as low as possible and at the same time makes the least fines, since it is the making of fines which consumes the greater part of the power.

Von Reytt was also able to estimate from the data obtained the amount of work necessary to reduce a given weight of Przibram ore consisting of lumps all of the same size, to any given size. These figures are given in Table 179.

TABLE 179.—WORK NECESSARY FOR CRUSHING 1 KILO OF DIFFERENT SIZES OF ORE.

Product all Lies Between.	Size of Feed in mm.					
	64	32 to 16	16 to 8	8 to 4	4 to 1	1 to 0.3
	Work Required in Kilogrammeters.					
32 and 16 mm	55	.....	.....	.....	.....	.....
16 and 8 mm	220	165	.....	.....	.....	.....
8 and 4 mm	320	265	100	.....	.....	.....
4 and 1 mm	780	725	560	460	.....	.....
1 and 0.3 mm	1,020	965	800	700	240	.....
Below 0.3 mm	2,020	1,965	1,800	1,700	1,240	1,000

This table shows for example that 1 kilogram of Przibram ore ranging between 8 and 4 mm. in size requires 700 kgm. of work to reduce it so that the product shall all lie between 1 and 0.3 mm. in size. While the figures in this table are not sufficiently verified, tests that have been made by Von Reytt show a fairly good correspondence between results calculated by the table and those obtained by power measurement.

The figures for work obtained by experiment show more favorably than the following figures from actual mill work at Przibram, which are averages for a year.

Rolls crushing 64-32 mm. grains to pass through 8-mm. screen used 144,500 kgm. per 100 kilograms; a Schranz mill, a one-runner mill and a stamp mill all crushing 8-6 mm. grains to pass through a 2-mm. screen used 230,857, 385,143 and 542,061 kgm. respectively per 100 kilograms. These figures are larger than those given in Table 177 in the experimental trials. The product of rolls in mill work yielded the following sizes: 8 to 4 mm., 46.20%; 4 to 1 mm., 32.22%; 1 to ½ mm., 11.65%; ½ to 0 mm., 9.93%; making a little more fines than in the experiments. The Schranz mill yielded more fines in mill work than in the experiment, while the one-runner mill gave about the same sizes under both conditions. The stamps in mill work gave 60 to 70% below ½ mm., which is considerably larger than that in the experiments. The increased amount of work required in the mill over and above what is required in the experiment is due to: (1) the machines not being fed up to their full capacity

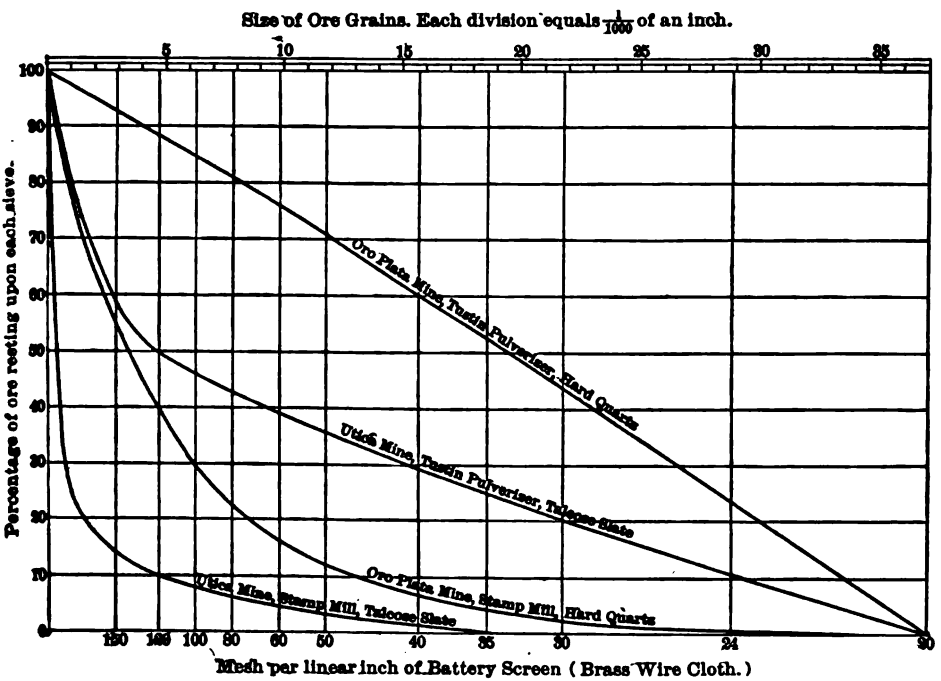

FIG. 187.—DIAGRAM OF SIZING TESTS OF THE PRODUCTS OF TUSTIN MILLS AND OF STAMPS.

all the time; (2) the recrushing of ore already sufficiently fine; (3) poor arrangement; (4) greater friction of machine.

§ 252. ROUGH RULES FOR POWER.—Figuring horse power from Table 179 we find that the use of 2,020 kgm. to reduce 1 k. of 64-mm. lumps so that the product shall all be below 0.3 mm. (0.012 inch), is equivalent to 1 horse power for every 3.6 tons crushed in 24 hours. There are a few rough rules which are very often applied for estimates of power, and which are well within safe limits for average ore. Among them are Gates's rule that breakers need not over 1 horse power to crush 24 tons per 24 hours to pass through a 2½-inch ring; a rule given by C. M. Ball that 1 horse power will crush 3.84 tons of average ore per 24 hours to $\frac{1}{16}$ inch; a rule given by Hallett that 1 horse power will crush 1 ton of quartz per 24 hours to 60 mesh. In addition to these rules, Mill 94 reports that

1 horse power crushes 1.7 tons per 24 hours to 20 mesh; this figure includes also the power used for elevating and screening. At the Lake Superior steam stamp mills, 1 horse power crushes 1.6 to 1.8 tons per 24 hours from $3\frac{1}{2}$ or 4 inches down to $\frac{3}{16}$ inch. All of these preceding figures agree more closely than at first appears, if one takes into account the amount of reduction in each case. Edison at Mill 91 does much better than any of them. He is able to make 1 horse power reduce 13.2 tons to 0.06 inch or 8.2 tons to 0.02 inch. His power measurements were made by the use of a motor and a wattmeter.

§ 253. WAGONER'S THEORY.—In discussing the Tustin mill, which yields an extraordinarily large percentage of coarse grains because the product is discharged nearly as fast as it is crushed to the size of the limiting screen, Luther Wagoner has shown, by the sizing test of its work on hard quartz (Fig. 187), that an almost equal weight of grains for any diameter was in that case made. This, taken in connection with the fact that for a given weight of ore the total surface

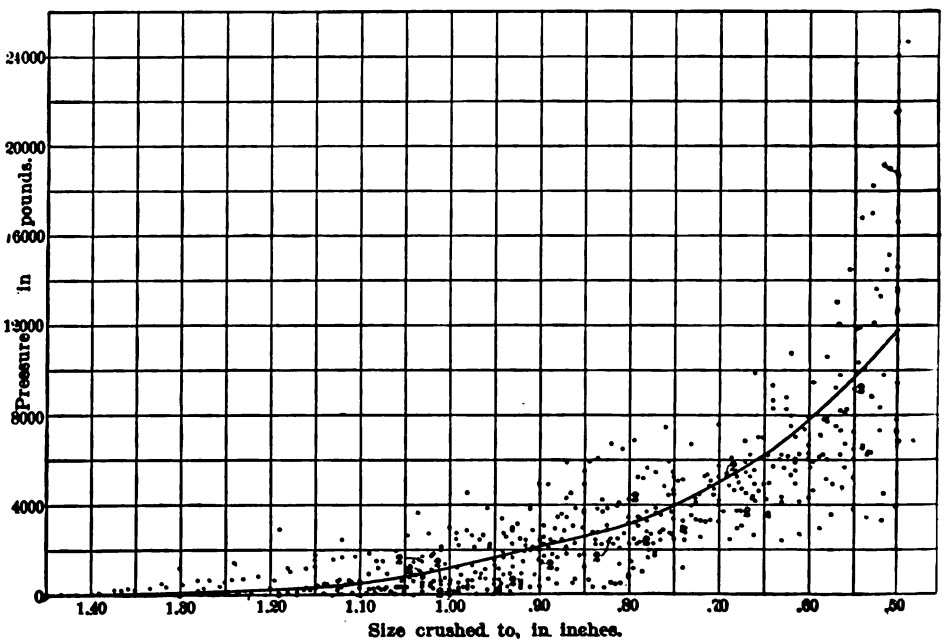

FIG. 188.—DIAGRAM OF CRUSHING TESTS.

of all the particles varies inversely as their average diameter, shows that in the product of a Tustin mill lying between 1 and 0.001 mm., the particles between 0.001 and 0.01 mm. in size have $\frac{1}{3}$ of the total surface, but only amount to $\frac{1}{100}$ of the total weight, the particles between 0.01 and 0.1 mm. in size also have $\frac{1}{3}$ of the total surface and amount to $\frac{9}{100}$ of the total weight, and the particles between 0.1 and 1 mm. in size have the remaining $\frac{1}{3}$ of the total surface and amount to $\frac{9}{10}$ of the total weight. Further, if work expended is proportional to surface produced, then 270 times as much work is expended on 1% of the ore at the fine end as on 1% of the ore at the coarse end. In the case of stamps where the grains are not systematically discharged as soon as crushed, there will be a decrease in the grains of larger diameter and a corresponding increase in those of smaller diameter. (See curve of stamps on hard quartz, Fig. 187.) In these two specific cases of Fig. 187 he has calculated that the surface on

grains between 0.037 and 0.00004 inch (0.940 and 0.001 mm.) is about 7 times as great in the case of stamps as in the case of the Tustin mill and consequently the stamps should take about 7 times as much power as the Tustin. This is nearly borne out by actual power measurements, which gave 1.33 horse power for Tustin mill, 6.14 for stamps.

§ 254. THE AUTHOR'S TESTS.—The author made 19 tests of various weights of pure quartz rock (specific gravity 2.640), ranging from 277 to 991 grams, to get at the average pressure to be exerted in crushing by rolls. Incidentally some figures were obtained on work required in crushing. The samples had been crushed in a Blake breaker set at 1½ inches and all below 0.393 inch (10 mm.) was screened out. Each sample was placed between the faces of the Olsen vertical testing machine, the particles being spread out so as not to interfere with one another, and the sample was gradually crushed until the distance between the faces of the machine was ½ inch. The pressure exerted was read at various intervals and at the same time the distance between the crushing faces noted. The pressures were all reduced by proportion so as to read for one pound of quartz, these results plotted, their averages calculated and from them an average curve drawn as shown in Fig. 188. The lines connecting consecutive points of each test are omitted for sake of clearness. From this curve can be seen at a glance the average pressure acting at any point during the compression.

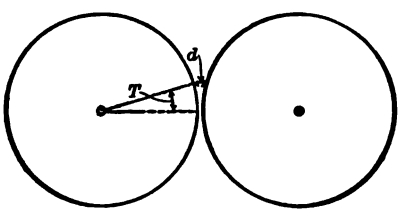

FIG. 189.

To apply these results to the case of rolls, an average pair of rolls was assumed, 24 inches in diameter, running at a periphery speed of 600 feet per minute (95½ revolutions) and crushing 100 tons of quartz rock per 24 hours from 1½ to ½ inch, that is, they are set ½ inch apart. Then for various values of the angle T (see Fig. 189) measured up from the horizontal, the distance d between the rolls will be as shown in Table 180.

TABLE 180.—DISTANCES BETWEEN THE ROLLS FOR VARIOUS ANGLES.

Value of T.	Distance Between Rolls.	Value of T.	Distance Between Rolls.	Value of T.	Distance Between Rolls.
Degrees.	Inches.	Degrees.	Inches.	Degrees.	Inches.
16	1.487	10	0.878	4	0.560
15	1.364	9	0.805	3	0.534
14	1.250	8	0.741	2	0.515
13	1.142	7	0.684	1	0.505
12	1.047	6	0.636	0	0.500
11	0.958	5	0.598		

The diameter of the rolls being 24 inches, 1° of arc corresponds to $\frac{24\times\pi}{360}$ or 0.20944 inches. The amount of ore upon 1° of the circumference where the rolls crush 100 tons per 24 hours (138.9 pounds per minute), and run at a periphery speed of 600 feet per minute will be $\frac{100\times2{,}000\times0.20944}{24\times60\times600\times12}$, or 0.00404 pounds.

From Table 180 the average horizontal distance between the rolls for each degree counting upward from the horizontal may be calculated and it is shown in the second column of Table 181. The pressures for 1 pound of quartz for each of these distances may be obtained from Fig. 188 and, reduced to correspond to 0.00404 pounds, are shown in the third column of Table 181. The fourth column shows the horizontal distances through which the forces act when the rolls revolve through 1° and the fifth column gives the total horizontal distances through which the forces act per minute with the rolls running at 95½ revolutions, or 600 feet periphery speed per minute. The sixth column giving the foot pounds of work done on each degree of arc per minute, is obtained by multiplying the third column by the fifth. The sum gives the total foot pounds per minute and divided by 33,000 gives the horse power which is 0.805. The sum of the third column amounting to 328 pounds is the average pressure exerted by the journals of the rolls in crushing. These figures may be somewhat lower than those obtained in practical running owing to the fact that in the tests the pressure was applied very gradually. It is a known fact that where the pressure is applied quickly, the strength of a sample increases until it is sometimes double.

TABLE 181.—COMPUTATION OF WORK FOR CRUSHING.

Number of the Degree of Arc Counting from the Horizontal.	Average Distance Between Rolls.	Average Load for each Degree.	Horizontal Distance Passed Through per Degree.	Total Horizontal Distance per Minute.	Work Done per Minute.
	Feet.	Pounds.	Feet.	Feet.	Foot Pounds.
16th	0.1188	0.20	0.0099	340.368	68.3
15th	0.1069	0.60	0.0092	316.296	189.8
14th	0.0997	1.01	0.0085	292.230	295.2
13th	0.0912	1.23	0.0077	264.726	328.0
12th	0.0835	4.84	0.0070	240.660	1,164.8
11th	0.0765	7.87	0.0064	220.032	1,731.7
10th	0.0701	11.35	0.0057	195.966	2,224.2
9th	0.0644	15.17	0.0050	171.900	2,607.7
8th	0.0594	19.39	0.0044	151.272	2,933.2
7th	0.0550	24.14	0.0038	130.644	3,153.7
6th	0.0512	29.69	0.0032	110.016	3,266.4
5th	0.0480	35.35	0.0024	82.512	2,916.8
4th	0.0456	40.00	0.0019	65.322	2,612.9
3rd	0.0437	43.63	0.0012	41.256	1,800.0
2nd	0.0425	46.05	0.0006	20.628	949.9
1st	0.0419	47.26	0.0002	6.876	325.0
Total		327.77			26,557.6

It should be noted that the 0.805 horse power is brought up to the 5 to 10 horse power used by rolls in practice, by the journal friction, and the 328 pounds pressure of springs is brought up to the 5,000 to 10,000 pounds pressure supposed to exist in practice, by the variation in the work. At one instant the rolls are idle, at the next they may be asked to do many times the average work.

Sizing tests of the products of some of the tests were made and are as follows:

Test No.	1	2	3	4	10	11	19
Weight in grams	528	594	667	631	363	379	297
	%	%	%	%	%	%	%
On 2 mesh (a)	27.76	35.35	26.17	22.38	25.62	24.66	37.84
Through 2 on 3 mesh	32.70	35.61	31.88	34.92	48.48	39.42	33.77
Through 3 on 4 mesh	10.84	7.47	12.78	10.32	6.89	8.20	9.80
Through 4 on 5 mesh	6.06	4.71	6.32	6.98	4.96	5.82	4.75
Through 5 on 6 mesh	3.04	2.69	3.19	2.86	1.98	2.65	2.02
Through 6 on 8 mesh	3.42	2.86	4.02	3.97	2.48	3.18	2.70
Through 8 on 10 mesh	3.61	2.53	3.77	3.97	2.20	3.44	2.02
Through 10 mesh	12.54	8.75	11.86	14.60	7.44	12.70	8.11
Total	99.99	99.97	99.99	100.00	100.00	100.01	100.01

(a) For actual sizes of the holes in these screens see Table 358.

§ 255. EFFECT OF STRENGTH AND SPECIFIC GRAVITY ON POWER USED.—Vezin has pointed out that the variation in power due to the varying specific gravity and strength of the rock is frequently lost sight of. Thus in Table 171 the compressive strength of granite is twice as great on an average as that of sandstone. Consequently it will take twice as much power to crush a ton of granite as to crush a ton of sandstone. In the case of porphyry, in the same table, the difference between the strongest and weakest samples coming from different localities shows that over twelve times as much power is required for the strongest rock as for the weakest. Regarding specific gravity, barite is almost twice as heavy as quartz so that, even if the strength was the same, it will take only about one half as much power to crush a ton of barite as to crush a ton of quartz, since the bulk is only half as great. To carry things to an extreme case, suppose that pure quartz and pure galena are to be crushed. The galena is about three times as heavy as the quartz and according to Rittinger it is only about $\frac{1}{5}$ as strong. Then the final result will be that it will take only $\frac{1}{5\times3}$ or $\frac{1}{15}$ as much power to crush the galena as the quartz; that is, assuming that it costs $1 to crush a ton of quartz then it would cost only $6\frac{2}{3}$ cents to crush a ton of galena under the same conditions.

Goodale reports a practical illustration of this at Mill 40, where in treating their hardest ores their capacity is 218 tons per 24 hours and the engine gives 177 indicated horse power or 0.812 horse power per ton. On softer ores, however, they have treated as high as 376 tons, using 171 indicated horse power or 0.455 horse power per ton. It should be noted in this case that the engine supplies power for concentrating as well as crushing.

It will be seen from Table 175 that power might be saved by heating the ore and quenching it with water previous to crushing. The cost of the heating, and the introduction of greater losses in other directions, as shown in § 5, however, generally prevent any ultimate saving in this way. Rittinger reports that for a special case in stamping quartz ore the capacity with the same power was 15% higher on roasted than on unroasted ore.

COMPARISONS OF VARIOUS MACHINES.

§ 256. COMPARISONS IN GENERAL.—Summing up the preceding theory it will be seen that if it is desired to crush with the least expenditure of power and to make the least slimes, then the rock should be broken as far as possible by splitting and the particles of the product that are sufficiently crushed should be gotten out of the way immediately, that is, there should be "free crushing."

In choosing the machine the points to be considered are the first cost, weight, number of wearing parts, power, speed and wear. These should all be as low as possible consistent with strength and efficiency. At the same time the machine should be simple in construction, easy to erect and operate and the wearing parts should be easily renewed. The chief drawback to the impact machines is the high speed. The use of water is in general to be recommended since it aids "free crushing" by removing the crushed product and it also prevents dust and perhaps consequent loss. For grinding machines those which have the grinding faces running concentric are liable to wear in grooves while eccentric grinders do not. There is more wear in grinding machines than in pressure machines and consequently there is more heating of the product unless the machine is run wet. This may be seen from the action of the grinding surfaces. A particle of ore coming between them is acted upon in two ways:—if it is much larger than the space between the surfaces it may be drawn in and crushed by pressure more or less modified by shearing; or if of nearly the same size its surfaces will simply

be worn off by a grinding or abrading action of surface on surface, the harder surface of the machine being but slightly acted upon. In grinders less pressure is required to break the particles than in direct pressure machines, just as a nut is more readily broken under one's heel when a twisting motion is given to it than when the weight of one's body alone is used.

The selection of the particular machine to be used will depend upon the character of the ore and the method of extraction to be adopted. Rolls are the standard machine for crushing all the brittle ores in preparation for concentration except where very fine crushing is needed. The steam stamps used at or near Butte, Mont., are the only exception.* The large steam stamps are the standard crushers of ores containing malleable minerals such as the native copper of Lake Superior. Gravity stamps hold their own for fine crushing. When acting on brittle minerals they tend to produce large quantities of slimes, owing to the fact that the particles cannot escape from the force of the blow until it is spent and the stamp lifted, and even then the stamp may fall again upon particles that are fine enough to be discharged.

When crushing ores containing malleable substances as copper and gold, the stamp tends to break up the flaky leaf-like forms and to turn out smaller grains, but they are grains which will settle to their proper place in the concentration work. Secondly these metallic grains, when buried by quartz, are scoured and brightened by the following blow of the stamp yielding, in gold milling, particles which amalgamate readily. In the process of scouring, however, an exceedingly minute grade of particles is made, too fine to be caught perfectly by vanner and for which, in gold milling, the amalgamated plate is the chief corrective. In concentrating native copper this fine grade of abraded metal is partly saved on the slime washers, but a portion is lost. Several other fine pulverizers are competing for the place occupied by gravity stamps, of which prominent examples are the Huntington and Bryan mills and ball mills. Rolls also are preferred to stamps for fine crushing where the ore is to be roasted or leached, and it is desirable to keep the percentage of slimes as low as possible.

The grinding machines are employed to some extent for pulverizing the middling products from jigs, products which contain the portions of the rich mineral that are most difficult to serve from the gangue. Acting as they do, partly by abrasion and partly by pressure, they are apt to make less slimes than stamps and more than rolls. On malleable metals, for example native copper, the effect of this grinding is to roll up some of the copper into spheres and cylinders and to slime an insignificant amount by the abrasion.

§ 257. Comparison of Rolls and Stamps.—The relative advantages of rolls and stamps have been the cause of considerable discussion. The great differences

TABLE 182.—VELOCITY OF APPROACH IN ROLLS.

Value of T.	Distance between Rolls.	Velocity with which the Points of Contact approach each Other.
Degrees.	Inches.	Inches per Second.
16	1.487	66.2
10	0.878	41.7
5	0.598	20.9
0	0.500	0.0

in their action will be brought out if one compares the acting velocity of stamps and rolls at the moment when the attack upon the ore is made and also the manner in which each machine parts with that acting velocity. Rolls 24 inches

* Now almost entirely replaced by rolls even there.

in diameter, set ½ inch apart, and revolving 95½ times per minute have a circumferential velocity of 120 inches per second, but the acting velocity is the velocity at which the points of contact of a particle of ore (see Fig. 36), approach one another. This velocity is obtained by multiplying 120 by twice the sine of the angle T (see Fig. 189), and its values are shown in Table 182.

This table shows that the acting velocity diminishes according to a trigonometrical law without regard to the hardness or strength of the ore.

If one considers a stamp on the other hand as the typical blow-striking machine, we have the acting velocities at the moment of attacking the ore, given in Table 183, and we know that it loses its velocity at a rate dependent on the hardness and strength of the ore.

TABLE 183.—VELOCITIES OF FALL IN STAMPS.

Height of Drop.	Velocity acquired at End of Drop.	Height of Drop.	Velocity acquired at End of Drop.
Inches.	Inches per Second.	Inches.	Inches per Second.
2.6	52.80	12.0	96.86
4.8	60.84	14.4	105.48
6.0	68.16	16.8	114.00
7.2	74.64	19.2	121.80
9.6	86.16	21.6	129.24

From comparing the two tables it appears that rolls attack at low speed and lose velocity gradually while stamps attack at high speed and lose velocity suddenly. The two operations are therefore totally different.

Sizing tests of the products of rolls and stamps as well as two other machines all working on similar ore, are given in Table 184 and serve to show how the characteristics of the machines are indicated by the quality of the product.[18] Other sizing tests are given under individual machines.

TABLE 184.—SIZING TESTS OF DIFFERENT CRUSHING MACHINES.

Name of Machine.	Kind of Ore.	Size crushed to in meshes per linear inch.	Percents which pass the next coarser sieve and remain on sieves with the following meshes per linear inch.			
			30	40	60	90
			%	%	%	%
Wet stamps	Pyritic banket (a)	30	5.60	12.66	17.58	64.16
Wet stamps	Chiefly pyritic banket	26.46	11.15	28.53	9.21	51.11
Dry stamps	Pyritic banket	20	20.30	9.80	21.80	49.10
Rolls	Pyritic banket	20	26.63	33.99	13.06	26.30
Rolls	Pyritic banket	22.36	9.30	41.85	15.38	33.47
Ball mill	Pyritic banket	22.36	20.07	24.38	13.88	41.67
Niagara pulverizer	Pyritic banket	.....	20.17	24.30	24.30	31.23

(a) The local name in South Africa for quartz conglomerate carrying some pyrite.

BIBLIOGRAPHY FOR LAWS OF CRUSHING.*

1. Callon, J., (1886), "Mining," Vol. III., p. 33. Extent of crushing desirable and comparison of different crushing machines.
2. Clark, D. K., (1891), "Manual for Mech. Eng.," pp. 629, 631. Strength of stone.
3. Gaetzschmann, M. F., (1872), "Aufbereitung," Vol. II., p. 600. Comparison of different crushing machines.
4. Goupillière, Haton de la, (1885), "Exploitation des Mines," Vol. II., p. 692. Necessity of crushing and extent of crushing desirable.
5. Kent, Wm., (1895), "Mech. Eng. Pocket-book," pp. 302, 312. Strength of stone.
6. Kunhardt, W. B., (1893), "Ore Dresing," p. 8. Extent of crushing desirable.
7. Linkenbach, C., (1887), "Aufbereitung der Erze," p. 27. Power for crushing and extent of crushing desirable.

* Other references, giving advantages and disadvantages of separate machines, may be found in the bibliographies of preceding chapters.

8. Louis, H., (1894), "Gold Milling," p. 242. Classification of crushing machines.
9. Rittinger, P. R. von, (1867), "Aufbereitungskunde," p. 19. Power necessary for crushing; classification of crushing machines; extent of crushing desirable.
10. Trautwine, J. C., Jr., (1895), "Civ. Eng. Pocketbook," pp. 437, 466, 493. Strength of stone.

---

11. *Am. Inst. Min. Eng.*, Vol. XXVI., (1896), p. 621. C. W. Goodale. Variation of power with hardness of rock.
12. *Berg. u. Hütt. Jahrb.*, Vol. XXXI., (1883), p. 137. K. von Reytt. Discussion of the advantages and disadvantages of various crushing machines and their field in ore dressing.
13. *Chem. & Met. Soc. S. Africa, Proc. of Monthly Meeting*, January 15, 1898, p. 20. F. White. Comparison of different fine crushing machines.
14. *Col. Sci. Soc.*, Vol. VI., (1897). H. A. Vezin. Effect of strength and specific gravity of rock on power used for crushing.
15. *Genie Civil*, Vol. XXIII., (1893), p. 189. P. F. Chalon. Discussion of crushing machines to be employed for various purposes.
16. *Inst. Civ. Eng.*, Vol. CVIII., (1892), p. 129. A. H. Curtis. Notes on the choice of crushing machines.
17. *Mittheil. kglch. tech. Versuchsanstalten Berlin*, Vol. I., (1883), pp. 76, 136, 146, 149, 151; Vol. II., (1884), pp. 106, 144, 152; Vol. III., (1885), pp. 23, 33, 119, 124; Vol. VI., (1888), pp. 49, 168; Vol. VIII, (1890), pp. 94, 100, 102. Dr. Böhme. Strength of stone.
18. *Mittheil. mech. tech. Lab. tech. Hochschule München*, Vol. IV., (1874), p. 1; Vol. X., (1884), p. 1. J. Bauschinger. Strength of stone.
19. *Oest. Zeit.*, Vol. XXXVI., (1888), pp. 229, 246, 255, 268, 283. K. von Reytt. Results of experiments at Przibram on the power used by different crushing machines.
20. *Raymond's Rep.*, (1876), p. 419. S. R. Krom. Comparison of stamps and rolls.
21. *Rev. des Mines*, Series III., Vol. XXI., (1893), p. 309. L. Demaret. Comparison of stamps with other fine pulverizers.
22. *Tech. Soc. Pac. Coast*, Vol. III., (1886), p. 45. L. Wagoner. Power necessary for crushing and comparison of stamps with Tustin mill.
23. *Tests at Watertown Arsenal*, (1884), pp. 212, 235; (1887), p. 970; (1890), pp. 1120, 1122, 1130, 1134; (1891), p. 735; (1892), p. 607; (1894), pp. 456, 460, 463, 466. Strength of stone.

PART II.

SEPARATING, CONCENTRATING, OR WASHING.

PART II.

SEPARATING, CONCENTRATING, OR WASHING.

The purpose of the second part of Ore Dressing ("Concentration" proper), is to separate the valuable minerals from the waste, or to separate one valuable mineral from another (thereby enhancing their value), or both, by utilizing the various physical properties of the minerals that are available for those ends.

Separating, like crushing, generally divides into preliminary, final and auxiliary work. The preliminary machines (log washers, screens and classifiers) are, as a rule, unable to do finished work; they simply divide up the ore into a set of preliminary products which are well suited for treatment by the final or finishing machines (picking tables, jigs, vanners, slime tables, magnetic concentrators, etc.). These latter machines separate the valuable minerals from the waste, but they often yield middling products needing further treatment. These middling products may be made up of either or both, of two classes of grains: (1) "included grains," that is, grains in which particles of valuable mineral are attached to or included in particles of gangue; and (2) "unfinished grains," that is, grains which are composed wholly of valuable mineral or of gangue, but which have escaped separation owing to their shape or relative size.

CHAPTER VIII.

PRELIMINARY WASHERS.

§ 258. Preliminary washers include trough washers, log washers, wash trommels, washing pans and hydraulic giants. Their province generally is to disintegrate and float adhering clay or fine stuff from the coarser portions. The latter may or may not be turned over to other processes for further concentration. Some forms deliver the coarse and fine products separately; others do only the work of disintegrating, and require a subsequent machine to make the separation. The disintegrating is done by using a considerable amount of running water, aided by some form of stirring device. These same machines are also sometimes used to enrich partly concentrated products. Several such are described in this chapter because their construction and mode of operation place them here. These washers are of three classes:

(*a*) Those using hand tools for stirring: trough washers.

(*b*) Those using some form of rotating stirrers driven by power: log washers, wash trommels and washing pans.

(*c*) Those using the force of a water jet: hydraulic giants.

§ 259. THE TROUGH WASHER, in its simplest form, is a sloping wooden trough 1½ to 2 feet wide, 8 to 12 feet long and 1 foot deep, open at the tail end, but closed at the head end. Other forms, ingeniously combining riffles and sieves, are described by different authors,[4 and 7] but they rob the apparatus of its simplicity, which is its main advantage.

Trough washers are used in large works in a subordinate way, for working up small quantities of a rich product where more expensive apparatus is not warranted. They are also used in small works as part of the main process.

In Mill 2 a trough washer is used which is 2 feet wide, 11 feet long, 1 foot deep, with the bottom 3 inches higher at the tail than at the head end. The tail end is open, but the head end is closed. The water, which is supplied at the head in liberal quantity, falls into the trough from a height of 12 inches, exerting considerable washing force. The ore, which is mine ore ranging from 3 or 4 inches to 0, is shoveled over and worked toward the head until the fine stuff is removed, and is then shoveled to a gravel screen. The rise of the bottom toward the tail allows larger charges to be worked, and prevents the loss of certain small sizes of rich ore which would be carried off in the case of a downward slope. The quantity of water used is such as to make it about 1 inch deep at the tail. About 8 tons of ore are treated in 10 hours.

In Mill 12 a trough washer is used for removing fine clay from sand, preparatory to jigging. It has a level bottom 46 inches long, with the head end sloping down to the bottom at an angle of about 65°. The remaining dimensions are as follows:

	Top Width.	Bottom Width.	Depth.
Head end.....	36 inches.	24 inches.	12 inches.
Tail end.....	24 inches.	20 inches.	6 inches.

It is fed with drainings from the finest washing plate (which has holes $\frac{3}{8}$ inch in diameter) by a feed box running across the upper end, with a slit the whole length, and a water pipe regulated by a cock. During charging the sand is pushed back by a shovel. A dam at the tail made of bars, one on another, held between side cleats, is heightened as needed. The washer yields: (1) Coarse sand, left in the washer; (2) fine sand in a little tailings tank; (3) clay waste.

Mill 22 has a "trunking table" 5 feet wide, 4 feet long, nearly horizontal, covered with steel plate. It has raised edges, 4 inches high, on the two sides and the upper end. The concentrates from the jigs ranging from over 12 mm. down to less than 3 mm. in size, are raked back and forth to rid them of the last of the limestone, which is carried to a hopper beneath, by running water. This hopper has sides sloping 45° to a $2\frac{1}{2}$-inch spigot, which delivers the coarser sand by a centrifugal pump to the first trommel. The overflow of the hopper goes to No. 3 settling tank. The cleaned ore is shoveled from the table to a car, and wheeled away.

At Mills 46 and 48 trough washers are used for cleaning up the residues left in the steam stamp mortars, called cōver work, consisting of rounded nuggets of copper of all sizes from 4 inches in diameter down, mixed with rock of the same range of size. They are 12 feet long, 18 inches wide, 12 inches deep at the head end and 6 inches deep at the tail end; and are built of plank, with plate iron lining for bottom and sides. They slope down toward the tail end 3° 35 or $\frac{3}{4}$ inch in 1 foot. A similar trough is used in Mill 45. The operation is as follows: A large quantity of water is let in at the head, and the rock and copper are shoveled into the stream, and by a skilful turning over of the mass, not only is the fine stuff washed away, but the rock is separated from the copper, the former being sent back to the stamps, the latter to the smelter, and the fines sent to the jigs.

In Mill 72 a rocking table is used to further clean the concentrates from the vanners. It is 12 feet long, 20 inches wide and 5 inches deep, and slopes down toward the tail end $\frac{1}{4}$ inch in 1 foot (1°10′). It is mounted on two transverse rockers, which are 24 inches long, $2\frac{1}{2}$ inches deep at the ends and 6 inches deep in the middle. The rocking motion is imparted by a side arm and a vertical connecting rod leading to an eccentric. The sides rise and fall $1\frac{1}{2}$ inches at each stroke. The vanner concentrates are fed with water to this table through a screen at the upper end, and are shoveled over and over toward the head. The product is raised about 50% in value by this treatment. The tailings go to the canvas plant.

A trough washer may have the hand work replaced by mechanical stirring. In one instance[7] a trough 10 feet 3 inches long, 2 feet $10\frac{1}{2}$ inches wide, sloping 10°, having a semi-cylindrical bottom of $18\frac{1}{4}$-inches radius, carries a longitudinal shaft with stirring arms, the ends of which swing within 1 inch of the curved surface of the trough. This shaft is placed at the geometrical center of the trough. When it is oscillated (by hand or power) the arms stir the ore and the lighter grains are carried rapidly down the slope by the water, while the heavier grains move but slowly. Scaife has improved this machine by putting in riffles to hold back the heavy minerals; and by adopting a hinged bottom, which is dropped by a lever at the proper time, and the accumulated product thus removed without wasting time and water to wash it down the slope.

§ 260. Log Washers.—A log washer is a slightly inclined trough in which revolves a thick shaft or log, carrying blades set obliquely to the axis. The ore is fed near the lower end, and water at the upper end. The blades slowly convey the lumps of ore up hill against the current, discharging them at the upper end, while the clay is gradually disintegrated and floated down to overflow at the lower end. The disintegrating action of the blades is due partly

to lifting and dropping the ore and partly to a knifing or cutting of the lumps with the front edges of the blades. The bottom of the trough may be constructed semi-cylindrical, with sides raised a little above the level of the axis to prevent slopping, or it may be a natural bottom formed by lumps of ore. At the lower end there is a dam to partially hold back the water. The upper end is open for the free discharge of the lump ore. The ore is fed near the lower end on the *rising* side of the log. This confines the work of the log to disintegrating and conveying; while, if fed on the *descending* side, it would become a crusher and would probably break the blades, except where the ore bottom is used. The blades are put upon the logs in several ways: in spiral rows, having the blades either with the same or with less pitch than the row; or in rows parallel to the axis, with the blades oblique.

In Mill 25 a "trunking machine" is used for removing the last of the dolomite from the concentrates of the No. 1 or preliminary jigs. The trough is a plank box about 15 feet long, into which is set a semi-cylindrical cast iron lining, 16 inches inside diameter. This lining is made in sections 3 feet long, and the space between it and the box is filled with wooden blocks. The trough slopes 4° (0.84 inch in 1 foot). The log is 15 feet 3 inches long, and has bearings at each end and in the middle. Its core is 8 inches in diameter. The thread preferred is of V-shaped blades of chilled iron cast upon screws (see Fig.

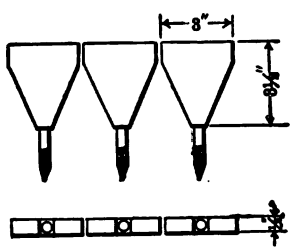

FIG. 190.—LOG WASHER BLADES USED AT MILL 25.

190). These blades make an almost continuous thread. This form does better work than the form consisting of annular segments of circles, which makes a practically solid, continuous blade. The reason for this is that, in the first form, the triangular spaces between the individual blades and the body of the log give the dolomite a better chance to be washed down the slope. The radius of the circle described by the blades is 7½ inches, that of the surface of the trough is 8 inches, leaving ½-inch space between the tips of the blades and the trough. The ore is fed on the rising side of the log, over a space beginning at 2 feet and ending 4 feet from the lower end. There are two ½-inch cocks near the upper end, for wash water. The log is driven by beveled gears, pulley and belt at the upper end, making 18 revolutions per minute. At the upper end it yields smelting lead ore, and at the lower end, middlings. The material fed, which has passed through holes 0.117 inch × 0.109 inch, contains 20 to 25% of lead, the finished product 72 to 75%. Thus the trunking machine enriches about 3 to 1. Each machine receives about 100 tons in 24 hours.

The log washer in Mill 4 has a trough 24 feet long, 2 feet deep, and about 2 feet wide. It slopes 14 inches in the 24 feet (2° 47′). The log is octagonal, with flanged blades, each fastened by two bolts. The ore is charged over the lower 6 feet, water is fed from a trough with 8 holes spaced along the remaining 18 feet. The slush is used as waste to fill in the pits. The coarse material goes to a screen for further dressing.

Mill 5 contains two pairs of log washers, or four logs in all (see Fig. 191*a*). The description of one log is here given. The trough, which is made of 3-inch pine plank, is 3 feet wide, 1 foot 5 inches deep and 18 feet 5 inches long, inside

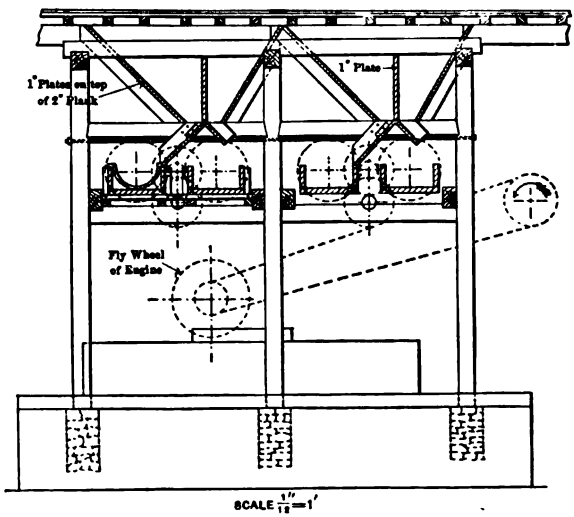

FIG. 191*a*.—END ELEVATION OF LONGDALE LOG WASHER.

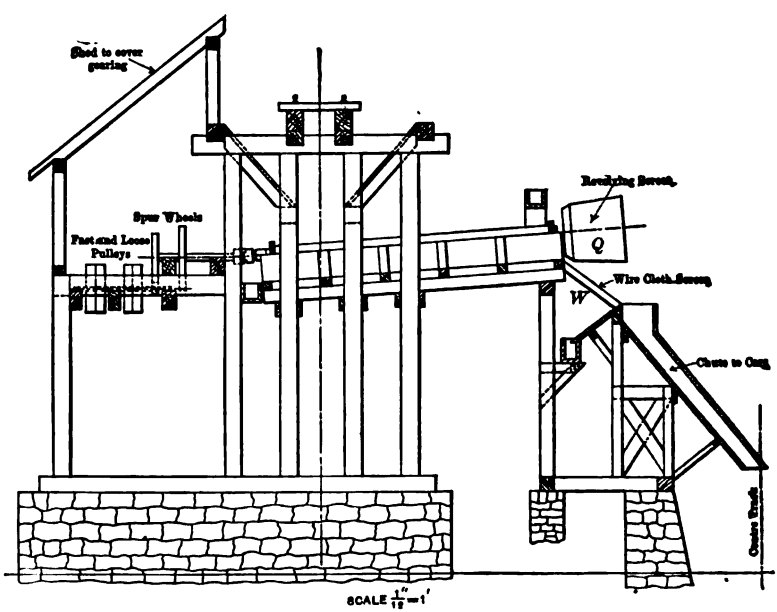

FIG. 191*b*.—SIDE ELEVATION OF LONGDALE LOG WASHER.

measures. Into it are put 15-inch lengths of cast iron semi-cylinders, 1 inch thick, with side flanges by which lag screws hold them to the sides of the trough. When these sections are laid close together, end to end, they make practically a

continuous semi-cylindrical cast iron trough, 18 feet 5 inches long, 1 foot 5 inches deep and 2 feet 6 inches wide, inside measures. The slope of the trough is ¾ inch in 1 foot, or 3° 35′. The log, of which Fig. 192*a* is a cross section, is a cast iron pipe 17 feet 5½ inches long, 11½ inches outside diameter and ¾-inch walls. It is flanged at each end to a cast iron gudgeon (Fig. 192*b*). The prolongation of the lower gudgeon forms a journal 5½ inches in diameter, that of the upper 4½ inches diameter. The blades or spoons (Fig. 192*c*) of chilled iron, are put on in two threads, 180° apart, with a pitch of 5 feet, which makes the pitch angle 56° 15′ at the outer ends of the blades; while, on the other hand, the plane of each blade has a pitch angle of 26°. There are eight blades to the circle, each 8½ inches long, 4 inches wide, sweeping a circle 28½ inches in diameter.

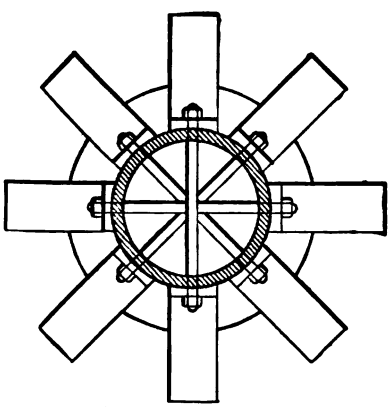

FIG. 192*a*.—CROSS SECTION OF LONGDALE LOG WITH BLADES ATTACHED.

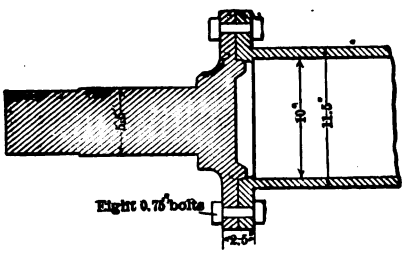

FIG. 192*b*.—ATTACHMENT OF LOG TO GUDGEON (LONGDALE).

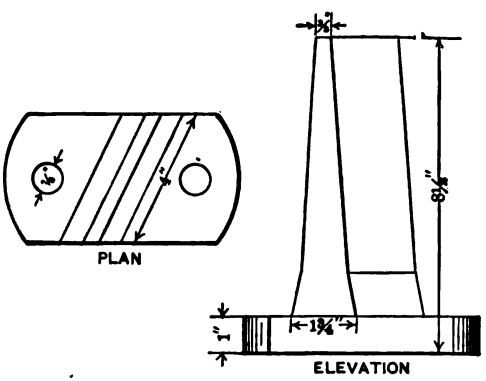

FIG. 192*c*.—BLADE OF LONGDALE LOG WASHER.

They are flanged at their bases, with under surfaces concave cylindrical, to fit the pipe. Each pair of two opposite blades is fastened by two ¾-inch bolts passing through their flanges and through the log. The radius of curvature of the trough being 15 inches and that of the blades 14¼ inches, the space between the trough and the ends of the blades is ¾ inch. The upper gudgeon is prolonged to form a shaft, which carries a conical sizing trommel (*Q*, Fig. 191*b*), for treating the enriched product. At the lower end, the gudgeon of the log is joined to the horizontal driving shaft by a flexible clutch coupling, by means of which the log may be thrown in or out of gear. The log makes 12 revolutions a minute.

The feed will all pass through an 8-inch ring. It comes from a large hopper by a chute, and is fed on the rising side of the blades at about two feet from the

lower end. Water is fed at the upper end at the rate of 150 gallons per minute. The capacity of a single log is 200 tons of mine ore in 24 hours, yielding 70.8% of washed ore, which is practically a sized product, the oversize of a 14-mesh screen (*W*, Fig. 191*b*), placed at the head end. An experiment with a 20-mesh screen, in place of the 14-mesh, increased the yield of washed ore 4%, the percentage of silica and iron remaining practically the same.

The weights of the component parts of a log are as follows: The shaft, allowing 35 pounds for the flanges, weighs about 750 pounds; the two gudgeons, at 125 pounds each, 250 pounds; the 54 blades at 27 pounds each, 1,458 pounds; the 54 bolts and nuts at 2 pounds each, 108 pounds; total, 2,566 pounds. The cost of a complete log would probably be 1¼ cents per pound.

The blades wear perhaps three months, more or less, according to the depth of chill on the wearing face. The gudgeons last about one year. The logs may last five years or more. The power required is 6¼ horse power for a single log and its trommel.

Johnson[8] gives the following figures for one day's work of the four logs, it being the average of six days: Pounds of coal burned per day, 1,479.16; tons of

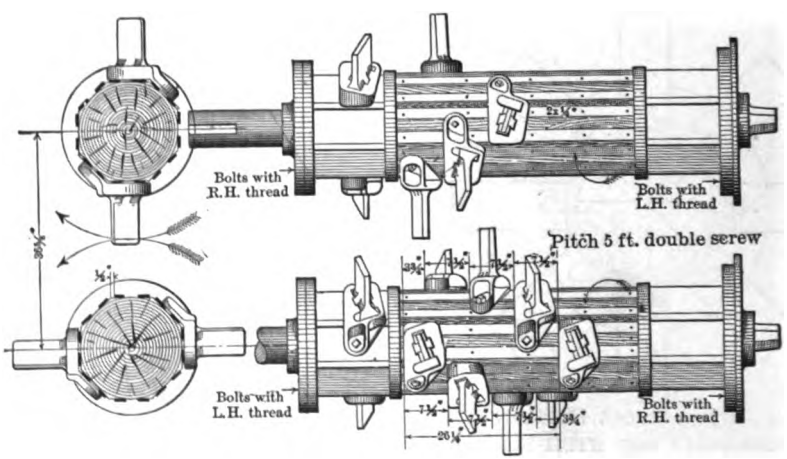

FIG. 193.—McLANAHAN'S DOUBLE LOG WASHER WITH WOODEN LOGS.

ore washed, 196.2; tons of washed ore, 138.9; percentage of washed ore to ore washed, 70.8; number of hours run, 5.375; number of men, including engineer, 6; cost per ton of mine ore for labor, $0.032; cost per ton of washed ore for labor, $0.045; pounds coal burned per ton of mine ore, 10.6.

The Thomas log washer was the first to have two logs in one trough. Its trough is usually about 25 feet long, 5 feet wide and 2 feet deep, inside measures. The bottom and sides are of heavy oak, the ends of cast iron. In it are two parallel logs geared together. The pitch angle of the blades is about 30°. The logs are hexagonal in section, and there are three rows of blades on each log, placed along the three alternate faces of the hexagonal prism. The diameter of the outside blade circle is about 27¾ inches, the blades are about 7½ inches high. It treats 50 to 75 tons per day and uses 30 to 50 gallons of water per minute, consuming 12 to 15 horse power.[14]

McLanahan & Stone make both wooden and iron logs. Their wooden log (Fig. 193) is octagonal, 17 inches in diameter between the faces, sheathed with iron straps 2 inches × ¼ inch to guard the corners and as a support for the bases of the blades, and has blades put on in two rows in the form of

screw threads, eight blades to the circle. The pitch of these threads is 5 feet. The blades are 4½ inches wide and 1 inch thick, and their outer ends sweep a circle 38 inches in diameter. Their bases are 2½ inches thick. The blade, therefore, projects 8 inches in the clear. The blades are removable and when worn out are replaced by new ones. The bases are screwed to the logs and have two taper dove-tailed lugs. The chilled blades have taper dove-tailed bases which

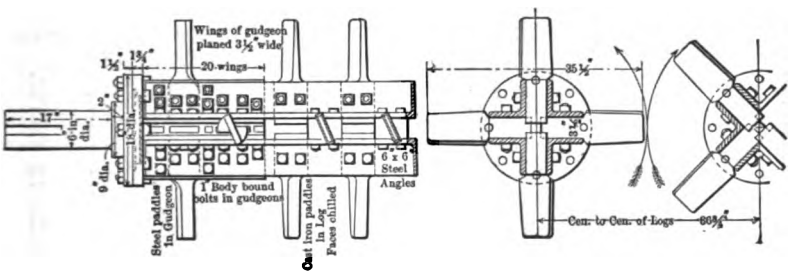

FIG. 194.—McLANAHAN'S STEEL LOG WASHER.

drive to a tight fit between the lugs, wooden wedges holding them in place. The pitch angle at the outer ends of these blades is 20°, which corresponds to a pitch of 3 feet 7½ inches. The gudgeon consists of a journal and flange bolted to a flanged octagonal socket, into which the end of the log is fitted and pinned.

The steel log, as made in 1898 (see Fig. 194), is composed of four steel angle irons, having flanges 6 inches wide and ⅝ to ¾ inch thick, with angles inward. They are spaced wide enough for bolting the blades between them. These angle

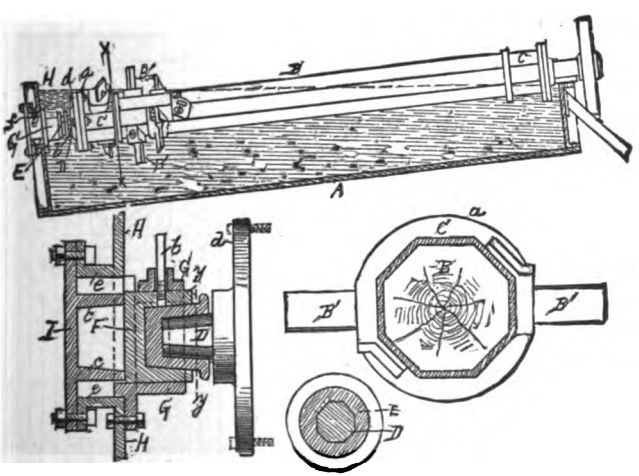

FIG. 195.—DETAILS OF McLANAHAN'S LOG WASHER.

irons aid in the washing. The blades are of chilled iron on log and of rolled steel on gudgeon. Blocks are placed to line up and rigidly hold the blades. The steel blades are ¾ inch thick at the tip and 1⅛ inches at the base and 5 inches wide. They are twisted to suit the pitch angle, 22½°, making the pitch 46 inches. Each blade is held by two bolts. Their tips sweep a circle 35½ inches in diameter. There are only four blades to the circle, as there are but four spaces in which the blades can be bolted. The gudgeon consists of a journal and a flange, bolted

to a flange with an *X*-tenon, which fits between the angle irons, and to which the latter are bolted. The length of the logs, whether of wood or iron, is about 30 feet, measured from outside the flanges of the two gudgeons. The iron logs

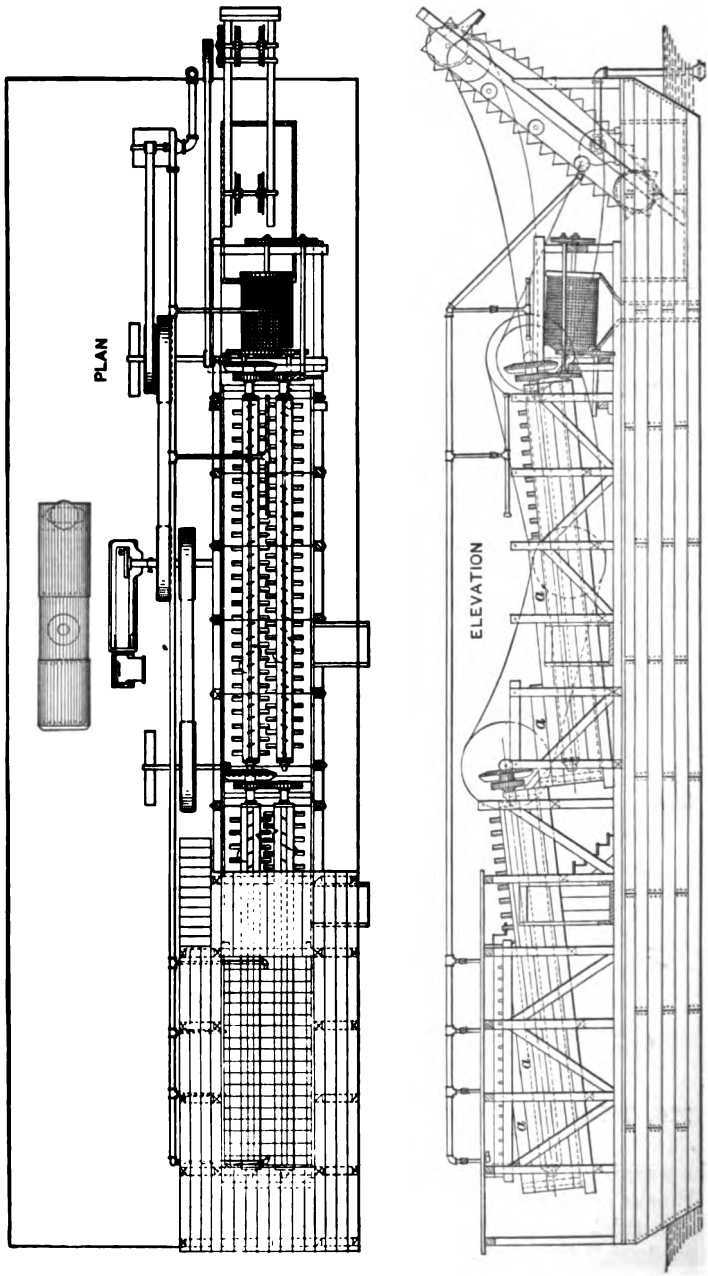

FIG. 196.—A RIVER BARGE EQUIPPED WITH TWO DOUBLE LOG WASHERS IN SERIES.

have 16 blades every 44 inches; the wooden logs, with blades in two helical threads, have 16 blades every 60 inches. The lower, immersed gudgeon has an

octagonal spindle (*D*, Fig. 195) fitted with a chilled thimble which serves as a journal. This journal revolves in a chilled step which sets in a permanent step. The two chilled wearing parts can be quickly replaced when worn out. Sometimes special stuffing boxes and ordinary bearings are used.

The trough for two logs is 31 feet long, 7 feet 4 inches wide, 4 feet 1½ inches deep, made of 2-inch plank with a lengthwise slope of 1 to 1¼ inches per foot (see Fig. 196). It has splash boards, *aa*, at the lower end and running about half way up on the two sides. The ends are of cast iron with flanges all around The lower end is called the back plate and contains the pillow blocks for the two bearings. The upper end is called the front plate and contains, in addition to the pillow blocks, the central outlet spout for concentrates. At 6 inches from the lower end and in the plane of rotation, is a bulk head of 2-inch plank, with a circular hole in it, in which revolves the flange of the lower gudgeon. This, in large measure, prevents the grit from getting into the journal of the lower gudgeon. The two logs are so set that the tips of their lower teeth are 10½ inches above the bottom of the trough. The logs revolve so that the under blades are approaching one another, and the obliquity of the blades is such that, by a plowing action, every lump struck by a blade is moved up hill. The logs make 12 to 15 revolutions a minute on 3-inch to 4-inch lumps, and 20 to 25 a minute if the lumps are not over 1½ inches in diameter. The two logs are geared together at the upper end, in such a way as to bring the teeth of the odd quadrants of one

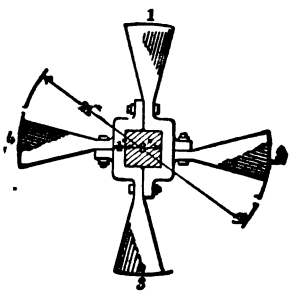

FIG. 197.—HASKELL'S LOG WITH BLADES ATTACHED.

log to mesh with those of the even quadrants of the other. Power is delivered to one of the logs, by reducing gears from the line shaft. Logs are sometimes driven at the lower end, but this requires special stuffing boxes. The ore is fed near the lower end between the two logs, upon the rising blades of both logs. The bottom soon fills with ore, making a working bottom that saves the wear on the planks. When this working bottom is established, the systematic washing and conveying of the lumps up the slope goes on. Wash water is fed in a spray between the logs, near the upper end. The water overflows at the lower end by a mud trough which discharges at one side just above the bulk head. The lump ore is discharged at the upper end into a trommel, to give it a final washing.

The iron log is stronger than the wooden log, is driven faster, has more teeth and greater capacity. It is more durable, and less time is lost in repairs.

In Mill 7 a pair of log washers is used upon land pebble phosphate. They are 12 feet long, and the blades sweep a circle 21 inches in diameter. The blades have a pitch of 16 inches, are 4 inches wide, and are mounted as shown in Fig. 197. The blade and the part which hugs the shaft are made of one piece of flat bar iron 4 inches wide, 1 inch thick, forged into shape. Blades 1 and 3 are bolted together, as are also blades 2 and 4. The latter pair is 4 inches in advance of the former. The whole log is provided with alternate pairs similar to the above.

§ 261. *Horizontal Logs.*—Log-washers have been built with two or three horizontal, immersed, parallel logs in one tank, with partial partitions between them. The first log pushes the ore forward by the end of the dividing partition, and delivers it to the second log. This carries it back and delivers it in like manner to the third log, which carries it forward to the point where it is discharged by the revolving scraper. The water moves in the opposite direction from the ore. This form has not met with the favor given to those previously described.

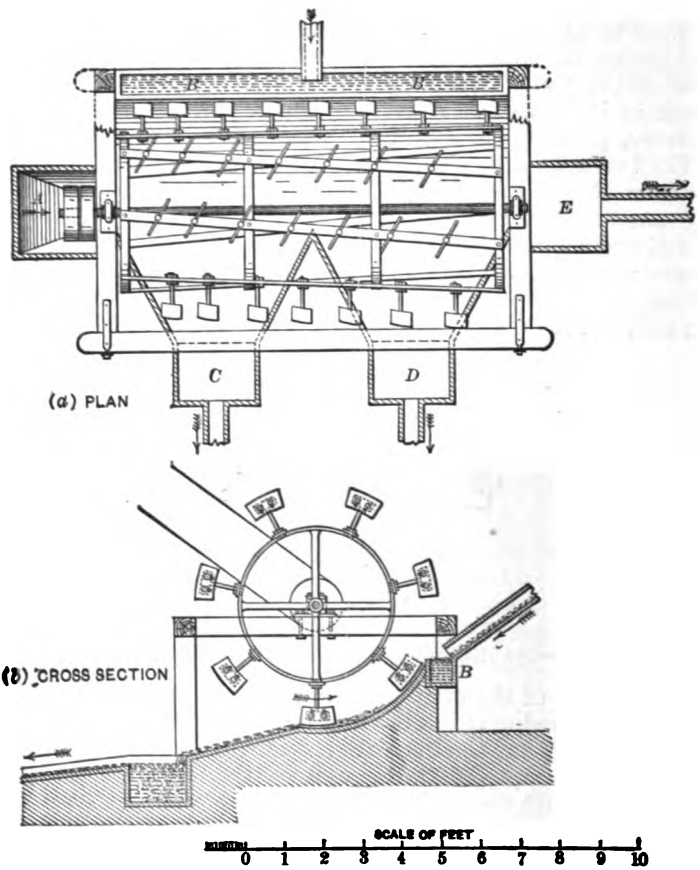

FIG. 198.—BALL'S "REVOLVING KNIFE BUDDLE."

Ball's "revolving knife buddle," (Figs. 198*a* and 198*b*), is a variety of log washer differing from the usual form. The trough, which is from 9½ to 16 feet long, has a curved bottom of about 3 feet radius lined with sheet iron; but instead of being semicircular it covers only 72° of a circle, the lower edge, as shown in the figure, being a little beyond the lowest point of the curve. The trough is set horizontal and the wash water, which is fed all along the upper edge of the curve, at *B*, flows down at right angles to the axis. Ore being fed at one end, from the hopper *A*, is moved forward and at the same time carried up the slope, against the stream of wash water, by oblique blades attached to a revolving frame. The blades revolve close to the trough, at about 20 revolutions a minute. They [illegible] the ore bed, thereby bringing the gangue to the surface; and then the

water carries the gangue down into the boxes *C* and *D*. The concentrates are discharged into the box *E*. The obliquity of the blades can be varied to suit the conveying speed required at any point in the length. The machine makes a very complete separation of tin ore in a single operation. In one instance, when treating unsorted pulp, the contents of the first box, *C*, contained some slime tin which required re-treatment, but that of the second box, *D*, was too poor to pay for re-treatment. At the Lisburne mines, Cardiganshire, Wales, an ore containing 15% lead, with quartz, blende, calcite and slate, was treated at the rate of 2½ tons per hour, yielding a concentrate with 50% of lead, which was raised to 75% by a second treatment.[5] In another case a concentrate containing 80% of galena was produced in a single operation from an ore carrying only 3% of galena.[19] The percentage of lead in the tailings is not stated for either of these cases. The size of material treated is not stated, but it is presumably stamp mill pulp below 1 mm. in size.

§ 262. WASH TROMMELS are hollow, revolving cylinders or cones (set with their axes horizontal) which disintegrate and float the clayey matter while ore and water are passing through them. This is accomplished by impact between the lumps of ore, sometimes assisted by the lifting and cutting action of blades, spikes or longitudinal slats. In the cylindrical form the ore is conveyed forward by oblique blades, acting on the principle of a propeller, or by continuous screw threads; but in the conical form the ore moves forward by gravity. There are two chiefs classes of wash trommels:

(*a*) Those with a partially closed discharging end, in which the lumps are immersed in a pool of water for washing; and

(*b*) Those with the discharging end completely open, in which the ore is washed by either a stream or sprays of water, or by both. In class (*a*) the ore is discharged either by a contracting cone with screw threads or by a little sand wheel elevator; in class (*b*) it discharges by gravity.

Continuous screw threads are troublesome both to construct and maintain, and, beside, they do too much conveying and too little disintegrating. Oblique knives or blades appear to be generally preferred to continuous threads.

Friction wheels are more commonly used for the support of these trommels than spiders upon central shafts. The latter, however, are not infrequently used for trommels of class (*b*).

Rittinger says that the most satisfactory peripheral speed is 2½ feet per second. If the speed is too slow it not only wastes time, but the operation is less effective; and if too fast, the time of exposure is too short for the proper softening of the clay.

In this country log washers appear to have pretty much driven out the wash trommels, and on this account there is a dearth of data upon the latter. The author therefore, places before his readers machines described as standard by foreign authors.

§ 263. *Wash Trommels with Ore Immersed in Water.*—The wash trommel shown in Figs. 199*a* and 199*b* is an expanding cone with partially closed ends, running on friction rollers. The ore is fed from the hopper *a* and wash water is run in from the pipe *b*. The disintegration is accomplished wholly by impact among the lumps of ore as they tumble down the slope. The ore and water are raised by the sand wheel buckets at *c*, and discharged upon the launder *d*. If there is too much water for the sand wheel to remove, the excess overflows at *e* into a trough placed to receive it. There can be no overflow at *f*, because *f* is higher than *e*.

The walls of the trommel consist of two layers of wooden staves, each 1½ to 2 inches thick. It is bound with six iron hoops. There are sixteen of the elevator buckets each 8 inches wide and 14 inches long, made of plate iron with

bent edges 2 inches wide. They are laid out so as to be tangent to a circle 24 inches in diameter.

The capacity is 200 to 300 cubic feet of mine fines per hour, or, if very clayey, 100 cubic feet; 1,000 to 2,000 gallons of water are required per hour, and the power used is ½ to ¾ horse power.[7] This style of trommel sometimes has longitudinal ribs for lifting the ore.[4]

A Bradford washer, consisting of a cylindrical wash trommel 8 feet long and 52 inches in diameter, was formerly used at the Copake Iron Works.[11] The cylinder, made of iron staves perforated with ¼-inch holes, is carried on three spiders. On the inside are inclined blades for disintegrating and conveying forward the ore. The lower portion of the cylinder dips into water deeply enough to completely immerse the ore. At the discharge end, perforated lifting blades deliver the ore to the rinser, 38 inches in diameter and 20 inches long, where it is washed with clean water, and then passes to the separator, the water flowing back into the trommel. The separator is simply a sizing trommel 30 inches in diameter 3 feet long and made of spaced rings. The trommel, the rinser and the separator are all on the same axis. The undersize of the wash trommel, which collects in the tank, is carried by the water to a 10-mesh sizing trommel. The products are: Clean lump ore from separator; small ore, under-

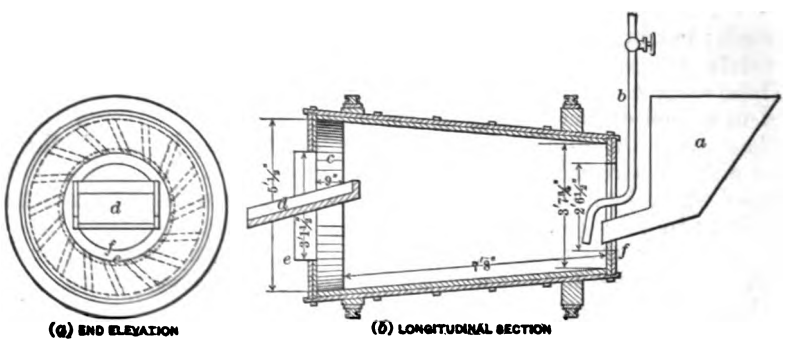

FIG. 199.—WASH TROMMEL (AFTER RITTINGER).

size of separator; small ore, oversize of 10 mesh; clay and mud, undersize of 10 mesh. The machine yields 20 tons clean ore per hour from ore carrying 20% of waste.

At Cabarceno, Spain, a cylindrical wash trommel, 15 feet long, 6 feet 6 inches in diameter, is used to clean limonite ore.[18] It has an internal screw thread of 1 foot pitch, about 10 inches high. Between the threads, at intervals of 1 foot and parallel to the axis, are lifting blades 4 inches broad and 4 inches high. The discharge end is made conical, and the ore is carried up the slope of the cone by the screw blades, and thus discharged. The trommel is supported on friction rollers and is driven directly by gear and pinion, at a speed of 12 revolutions a minute. It treats 6 cubic feet of ore per minute, using 80 gallons (10.7 cubic feet) of water per minute with the ore, and 70 gallons (9.4 cubic feet) additional for rinsing the ore in the discharging cone. The water and clay are discharged at the feed end. In 10 hours it produces 70 to 100 tons of cleaned ore, carrying 2% or less of clay. A cubic yard of mine ore yields 600 pounds of cleaned ore.

The Crickboom wash trommel (Fig. 200), is a steel plate cylinder 98.4 inches (2,500 mm.) long, 49.2 inches (1,250 mm.) diameter. At the feed end is a truncated cone 12.1 inches (307 mm.) long on the axis and 29 inches (736 mm.) diameter at the small end. At the discharge end is a truncated cone 12.1 inches

(307 mm.) long and 39.1 inches (993 mm.) diameter. Within the cylinder are fourteen longitudinal lifting slats of flat iron, each of which is attached by seven short angle irons to the shell, leaving a clear space under the slats of ¾ inch (19 mm.). Upon each of these slats are attached nine blades, the tops and bottoms of which are even with the top and bottom of the slat, and the blades are set at an angle of about 70° with the axis of the machine. The cylinder is supported on four friction rollers. Passing through the center is a shaft, supported in independent bearings and carrying sixty-two arms placed in four longitudinal rows. The radius of the revolving arms is 15.6 inches (395 mm.); the radius of the inner ends of the blades on the cylinder is 18.8 inches (477 mm.); leaving a clear space of 3.2 inches. The cylinder makes

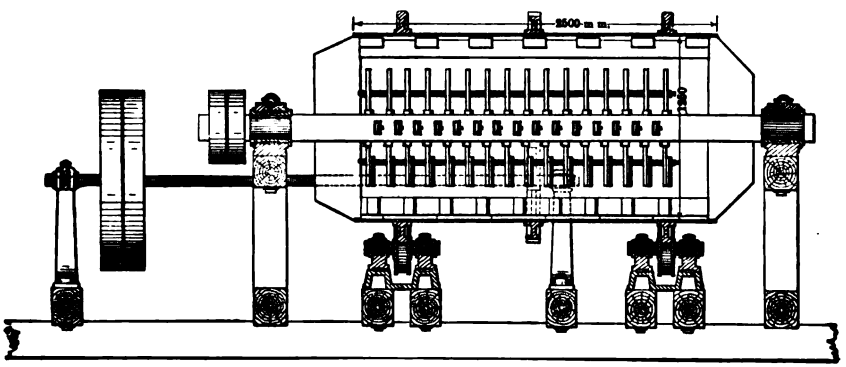

(*a*) Longitudinal Section.

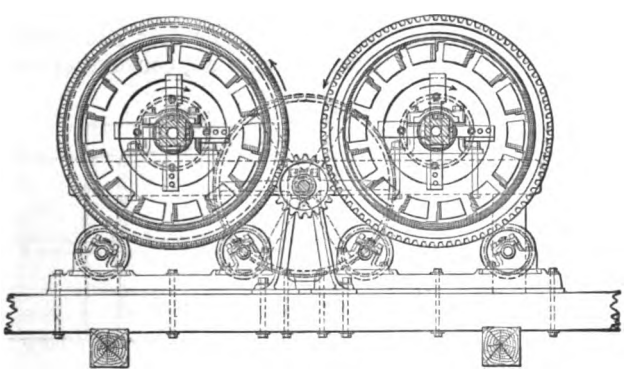

(*b*) Cross Section.

FIG. 200.—CRICKBOOM WASH TROMMEL.

10 revolutions a minute in one direction; the arms make 220 revolutions per minute in the opposite direction. The ore, which is fed with water from a hopper at the feed end, is raised by the longitudinal slats to a point somewhat above the center, and at the same time moved forward by the diagonal blades. As it *falls,* it is struck by the rapidly *descending* arms, and disintegrated. The ¾-inch spaces under the slats save the water and fine ore from being lifted. The mixed water, sand and lumps of ore are discharged by overflowing at the lower end of the machine. At the Altenberg mine in Aachen, one of these trommels treats 4,500 to 5,000 kilos (5 to 5.5 tons) of tough clayey ore per hour, using

8 cubic meters (2,110 gallons) of water. The trommel lasts nine to ten years, except that the conical receiving and discharging ends wear somewhat faster.*

§ 264. *Wash Trommels Washing the Ore in a Running Stream of Water.*—Fig. 201 shows a simple form of wash trommel consisting of a plate iron cone 1,960 mm. (77.2 inches) long, with a small diameter of 1,100 mm. (43.3 inches) and a large diameter of 1,300 mm. (51.2 inches). The whole is carried on a six-armed spider at each end, the spiders being keyed to a wrought iron shaft 100 mm. (3.9 inches) diameter. At the feed end is a cone 820 mm. (32.3 inches) small diameter, 310 mm. (12.2 inches) long on the axis. The first 750

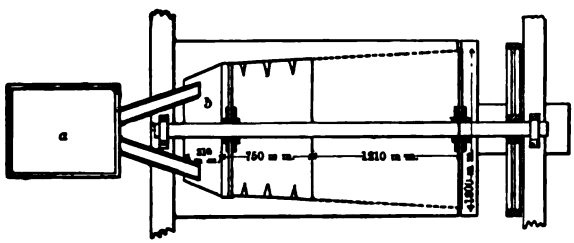

FIG. 201.—PLAN (PARTLY IN SECTION) OF A COMBINED WASH TROMMEL AND SIZING TROMMEL (AFTER LINKENBACH).

mm. (29.5 inches) length beyond the feed cone carries three rings of spikes, 115 mm. (4.5 inches) long, projecting toward the center. There are 22 spikes in each ring. The remaining 1,210 mm. (47.7 inches) of the length is perforated with 30-mm. holes. The ore is fed from the hopper *a* into the receiving cone *b* by means of a stream of water. Water is also used on the outside of the screen, in the form of a spray. The trommel makes 15 revolutions a minute, treats 99 tons of ore in 24 hours, and if the latter does not contain too much clay, uses 26.4 gallons (100 liters) of water a minute, consuming about 0.5 horse

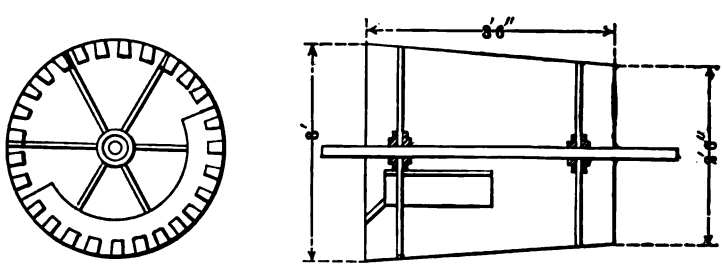

FIG. 202.—SKETCH OF WASH TROMMEL USED AT MILL 47.

power.[6] It yields: Oversize, which is cleaned lump ore; undersize which is fine ore, clay and water.

A conical plate iron, wash trommel (Fig. 202) is used in Mill 47 for treating the cōver work from the steam stamps. It is 42 inches long on the axis. The large diameter is 36 inches, and the small diameter 30 inches. It is carried on a shaft, by a six-armed spider at each end. At the lower end is an annular dam 6 inches high and extending around nearly half the circle. In the base of this dam are square perforations 2 inches wide, 2½ inches high and 2 inches apart. The remainder of the circle has retaining fins 2½ inches high, 2 inches wide, with 2-inch spaces between them. At the end of each revolution, the material which

* Private communication from Oberbergrath O. Bilharz to the author.

has not found its way out through these holes and spaces, is guided, by a diagonal fin, to a discharge hole 6×18 inches in the body of the trommel, a few inches from the lower end, and around three sides of which is a shield 6 inches high.

In comparing log washers with wash trommels, Benedict states that the latter do more work than the former, but the ore is not so well cleaned by them, and the running expense is probably higher.[15]

§ 265. WASHING PANS.—Large circular pans are sometimes used, in which the ore is disintegrated by revolving blades, or by rollers and scrapers. The ore being fed with water at one side, the clay and fine sand overflow at the center while the heavy product collects in the bottom of the pan.

In the South African diamond fields, in order to free the weathered diamond-bearing "blue ground" (see § 616) from the finest sand and mud, an iron pan, 14 feet in diameter and 12 inches deep, is used.[10 and 21] In the middle of the pan is a circular dam 4 feet in diameter and 8 inches high. A vertical central shaft, revolving 8 or 9 times a minute, carries 10 horizontal arms, each provided with 6 or 7 vertical blades, which are arranged in a spiral between the dam and the edge of the pan. The "blue," after passing through the (¾ inch?) holes of a trommel, is fed with water at the outer edge of the machine. It is disintegrated by the revolving blades, and the water carries the clay over the inner rim into a trough, while the heavy gravel is worked toward the outer rim. To avoid possible loss of diamonds in the overflowing clay, the overflow from two pans passes through one safety pan of the same construction, except that the bot-

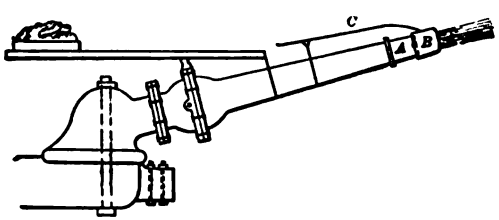

FIG. 203.—MONITOR HYDRAULIC GIANT.

tom, instead of being flat, slopes gently toward the outer rim. One pan treats 400 to 450 loads in 10 hours, leaving a deposit of 3 or 4 loads,* which is removed through a gate in the bottom, by means of scrapers attached to the revolving arms. These pans resemble the basin washers[23] that are used in Europe to disintegrate clay.

A pan, in some respects similar to those just described, is used for washing corundum and emery.[22] It consists of a shallow wooden tub 5 feet in diameter, with a cast iron bed, on which two heavy wooden rollers revolve about 12 times a minute. The material is stirred by an iron fork that precedes each roller. Constantly flowing water, carefully regulated, carries the lighter portion through outlets in a raised, central platform, the heavy corundum remaining in the pan. The operation is continued 3 to 5 hours. One man can tend 8 pans, each of which requires 3 to 5 horse power. Much care must be exercised not to round the grains of corundum, which will take place rapidly after a certain point in the process is reached, and will greatly impair their cutting edges.

§ 266. HYDRAULIC GIANTS are specially designed nozzles which serve to control and direct the powerful jets of water that are sometimes used to disintegrate large bodies of ore. Fig. 203 represents the Monitor, which is one of the forms that has found favor in auriferous gravel mining. The movements to right and left, or up and down, are upon vertical and horizontal pivots re-

* A load of "blue ground" weighs about 1,600 pounds.

spectively. The guiding parts consist of: *A*, the iron nozzle, *B*, the deflector, attached by a gimbal joint; and *C*, a lever to govern the movement of *B*. When *C* is moved in any direction, the force of the water jet acting upon *B* moves the whole nozzle to the same side that *C* was moved. The size of nozzles ranges from 4 to 9 inches in diameter, 5½ to 7 inches being the most common sizes. To provide the necessary force for the jets, water columns of 55 to 1,720 feet have been used at California placer mines, the usual heights ranging from 200 to 400 feet. For details the reader is referred to Bowie's "Hydraulic Mining."

A hydraulic nozzle was formerly used at Iron Mountain, Missouri, for washing away the light clay in a superficial deposit of hematite, preparatory to jigging. The method used was to hydraulic down the bank, taking out the larger part of the clay; to hydraulic it a second time; and then to haul the gravel to the mill,

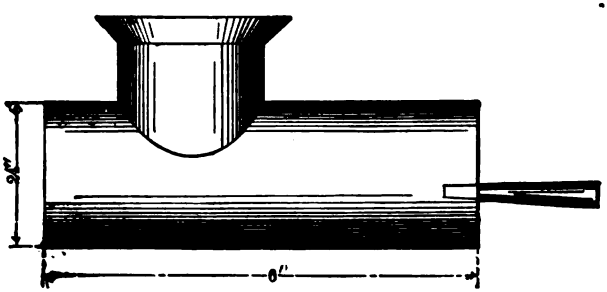

FIG. 204.—HASKELL'S JET WASHER.

where a series of revolving screens and Bradford jigs completed the concentration of the hematite.

Hydraulic nozzles are used in Mill 7, in washing land pebble phosphate. A nozzle 1 to 2 inches (generally 1½ inches) diameter is used. One of these nozzles disintegrates the rock in place, another is used to discharge the rock from the transporting barge, and a third nozzle is used in the jet washer (Fig. 204), which is an iron cylinder 6 feet long, 2 feet diameter, with one end closed, and with a feed hopper above. A jet 1½ inches diameter, delivered from a steam pump under 50 pounds pressure per square inch, plays in at the open end and gives a final disintegration to the clay. Although the log washer is used at this establishment, the jet is found to be a far more efficient disintegrator, and hence its use in the variety of ways indicated.

BIBLIOGRAPHY OF PRELIMINARY WASHERS.

1. Bilharz, O., (1896), "Mech. Aufbereitung," Vol. I., p. 55. The Carnall and the Crickboom wash trommels. Illustrated.
2. Davies, E. H., (1894), "Mach. Metal. Mines," p. 446. The Crickboom wash trommel and experience with it.
3. Foster, C. Le N., (1894), "Ore and Stone Mining," p. 539. Washing pits, pans and trommels. Illustrated.
4. Gaetzschmann, M. F., (1864), "Aufbereitung," Vol. I., pp. 604 and 701. Several forms of trough washers and wash trommels. Illustrated.
5. Hunt, R., (1884), "British Mining," p. 765. Illustrated description of Ball's "revolving knife buddle," with results.
6. Linkenbach, C., (1887), "Aufbereitung der Erze," p. 22. Expanding cone wash trommel. Illustrated.
7. Rittinger, P. R. von, (1867), "Aufbereitungskunde," p. 233. Trough washers; and a wash trommel with partially closed ends. Illustrated.

8. *Am. Inst. Min. Eng.*, Vol. XXIV., (1894), p. 34. Guy R. Johnson. Log washing plant at Longdale, Va. Illustrated.
9. *Ann. des Mines*, Series VII., Vol. II., (1872), p. 279. A. Henry. Wash trommel with partially closed end, and with longitudinal ribs.
10. *Cassier's Mag.*, Vol. XIV., (1898), p. 386. Thomas H. Leggett. Diamond washing pans. Illustrated.
11. *Charcoal Iron Workers*, Vol. VII., (1886), p. 6. William A. Miles. A perforated cylindrical wash trommel with oblique blades, combined with rinsing cylinder and a sizing trommel.
12. *Coll. Eng.*, Vol. XVII., (1896-1897), p. 190. Scaife's improved trough washer. Illustrated.
13. *Coll. Guard.*, Vol. LXVII., (1894), p. 496. Same as *A. I. M. E.*, Vol. XXIV., p. 34.
14. *Eng. & Min. Jour.*, Vol. L., (1890), p. 11. The Thomas log washer.
15. *Ibid.*, Vol. LIII., (1892), p. 349. W. de L. Benedict briefly outlines a log washing plant.
16. *Ibid.*, Vol. LIII., (1892), p. 665. John W. Meier. Wash trommel with partially closed end, combined with a screening trommel.
17. *Ibid.*, Vol. LVII., (1894), p. 223. Same as *A. I. M. E.*, Vol. XXIV., p. 34.
18. *Inst. Civ. Eng.*, Vol. CXVI., (1894), p. 331. Frederick Kensington. Cylindrical wash trommel with screw threads and lifting blades. Illustrated.
19. *Inst. Mech. Eng.*, (1873), p. 166. Richard Taylor. Results of work with "revolving knife buddle."
20. *Iron Age*, Vol. LIV., (1894), p. 222. Same as *Inst. Civ. Eng.*, Vol. CXVI., p. 331.
21. *Min. Ind.*, Vol. II., (1893), p. 545. Washing pan for diamondiferous earth.
22. *Ibid.*, Vol. V., (1896), p. 19. Charles N. Jenks. Washing pan for corundum.
23. *U. S. Geol. Survey—Min. Resources*, (1897-98), p. 387. Heinrich Ries. Basin washers and wash trommels for disintegrating clay.

CHAPTER IX.

SIZING SCREENS.

§ 267. SCREENS OR SIEVES are surfaces with holes in them, which serve to separate the finer particles, which can pass through the holes, from the coarser, which cannot; the purpose of screen sizing being to divide the ore into such a series of products that the concentrating machines which follow (jigs, magnetic concentrators, etc.), can readily separate the values from the waste. They may be classified as follows:

Stationary Screens	**Grizzlies or bar screens, and gravel screens.** **Perforated plate and wire cloth screens for medium and fine work.**
Moving Screens	**Plane shaking screens, or riddles.** **Vibrating grizzlies, or oscillating bar screens.** **Revolving screens, or trommels.**

STATIONARY SCREENS.

§ 268. GRIZZLIES OR BAR SCREENS.—These are screens for separating coarse ore from fine. They are usually made of stationary bars, placed at a definite

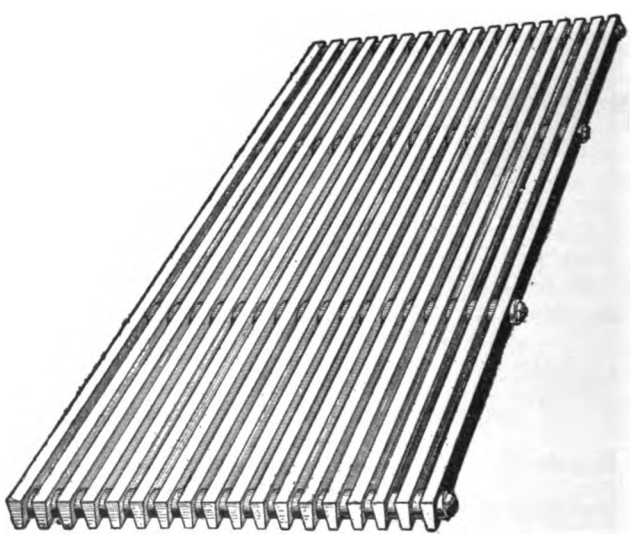

FIG. 205.—GRIZZLY OR BAR SCREEN.

distance apart (see Fig. 205). This distance limits the size of particles which can pass through the screen. The two products they yield are called undersize and oversize, the former containing the particles that are small enough to go through between the bars, the latter those that are not. The grizzly is set at such an angle that the ore will slide upon the bars automatically. The angle

for quartz ores is usually 45°. Some minerals slide at much less angle. Grizzlies used in mills (see Table 185), are naturally divided into two classes: (1) Those which relieve the breaker, the sorting table or the spalling floor of the fine ore; (2) those upon which hand sorting is done at the same time with the screening. In the first class the bars are nearly always set at an angle at which the rock will slide freely; in the second class a much gentler slope is used.

To make the ore slide as easily as possible, the bars are always placed with their lengths in the direction of steepest slope. They are supported at both ends, as shown in Fig. 206. Their lateral flexibility, which might cause the bars to spring apart and allow large lumps to pass through, is overcome by bolts running across the grizzly through holes in the bars, with space thimbles

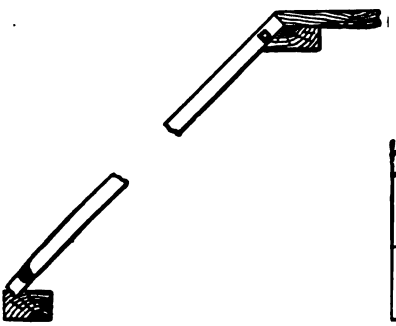

FIG. 206.—METHOD OF SUPPORTING GRIZZLIES.

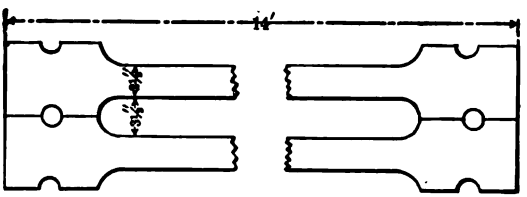

FIG. 207.—GRIZZLY BARS AT MILL 44.

placed on the bolts between the bars (see Fig. 205). At Mill 44 very heavy, stiff bars are used and the spaces are maintained by means of flanges cast on the ends (see Fig. 207). The sides of the grizzly should be walled in with heavy planks to confine the ore. The bars are generally strong enough to bear, without intermediate supports, the heavy loads of ore that are sometimes dumped upon them, the strength and weight being proportioned to the weight of ore dumped at one time. The loads are very heavy at Mills 44, 46, 47 and 48; at all the others they are lighter. The length and width are proportioned to the *volume* of ore dumped at one time, and to the percentage of fines. The bars should have such a cross section that the spaces will widen from the upper to the under side, thus insuring a free discharge of the undersize. Fig. 205 shows the commonest form of bar. The following list, taken from the Union Iron Works catalogue, gives several sizes of grizzlies using this form of bar:

Width.	Length.	Spaces.	Bars.	Weight.
Feet.	Feet.	Inches.	Inches.	Pounds.
3	6	2	⅝x3	600
3	8	2	⅝x3	800
3	10	2	⅝x3	1,000
4	8	2	⅝x3½	1,200
4	10	2	⅝x3½	1,500
4	12	2	⅝x3½	1,800
5	10	2	⅝x3½	2,400
5	12	2	⅝x3½	2,900

Mill 35 uses round bars with the ends bent at right angles and driven into

two supporting timbers (see Fig. 208). Mills 65, 73 and 74 use old stamp stems 3 inches in diameter and 11 feet long. Various designs have been made to get the most wear, and throw away the least material when the bars are worn out. A thick head gives metal to withstand the wear; and a narrow, deep web gives the strength to resist bending. This form also clears itself well, because of the widening space below. Special forms, designed for this purpose, are used in Mills 22, 28, 46, 47, 48, 61 and 92.

Mill 61 has a grizzly consisting of two sets of bars, one following the other,

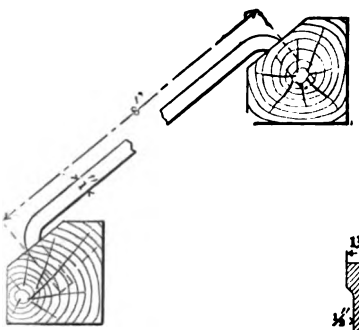

FIG. 208.—A METHOD OF SUPPORTING ROUND GRIZZLY BARS.

FIG. 209.

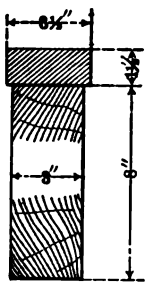

FIG. 210.

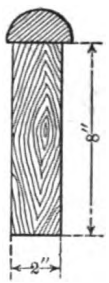

FIG. 211.

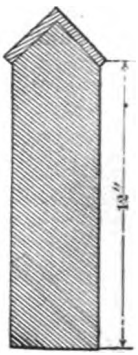

FIG. 212.

CROSS SECTIONS OF SPECIAL GRIZZLY BARS.

with a drop of 2½ inches from the end of the first set to the beginning of the second. The upper set takes the hardest wear and is replaced oftener than the lower set. The special narrowing of the bar and widening of the space down the slope of these bars is to make them clear themselves. Except that their lower ends are supported they are, in every sense, finger bars, that is, bars supported

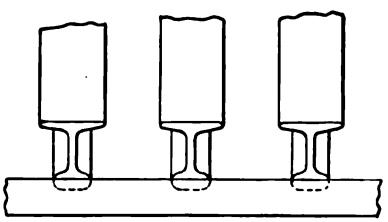

FIG. 213.—ELEVATION OF GRIZZLY MADE OF INVERTED RAILS.

only at the upper end and having a decreasing width of bar and consequently an increasing width of space toward the lower end.[17]

Mill 22, also, uses two sets of bars. In this case the first set has a steeper slope than the second. The bar used in this mill has a heavy head supported by a deep, narrow web below (see Fig. 209).

Mills 46 and 48 use a spruce timber capped with a square iron bar (see Fig. 210). When the iron is worn out the timber will generally be worn out also. Mill 92 uses a wooden bar capped with half-round iron bolted on (see Fig. 211). Mill 47 uses cast iron bars capped with steel angle irons (see Fig. 212). The steel wears out, but the iron is permanent. Of the various designs seen by

the author this probably has the least material to throw away. Mill 28 uses 8-pound iron rails with the flanges up (see Fig. 213). These are probably adopted in order to utilize old rails. They do not last well, and they rapidly wear to wider spaces. They make the spaces wider at the bottom than at the top.

Tabulated data of grizzlies in the mills are given in Table 185.

Gravel screens are inclined flat screens for coarse sizing, generally made of wire cloth. They are used for similar work to grizzlies, but on a smaller scale. They are often portable and worked by shoveling the ore upon them from the front. Gravel screens are used in Mills 1, 2, 12, 14 and 54. For details see Table 185.

TABLE 185.—DIMENSIONS, MATERIAL AND LIFE OF GRIZZLIES AND GRAVEL SCREENS IN THE MILLS.

Abbreviations.—Ft.=feet; Hor.=horizontal; In.=inches; lb.=pound; No.=number.

Mill No.	Grizzly No.	Slope.	Length		Width.		Bar.		Space.	Section of Bar.	Material.	Oversize goes to	Undersize goes to
							Width.	Depth.					
		Degrees.	Ft.	In.	Ft.	In.	Inches.	Inches.	Inches.				
1	1	45	.....		.....		.....	.....	.....	.....	Wire cloth.....	(a)	(o)
2	1	45	4		2		.....	.....	1¼x1¼	.....	Wire cloth.....	(a)	(o)
5	1	Hor. (d)	10	3	12		1½	1½	2	Round	Iron	(v)	(r)
12	1	30	10		2	10	½ (wire)	½ (wire)	1½x1½	.....	Wire cloth.....	(a)	(c)
12	1	35	16		4	6	2	3	2	.....	Wrought iron	(a)	(m)
14	1	.....	.....		.....		.....	.....	2½	.....	Bars	(a)	(h)
	2	.....	.....		.....		.....	.....	¾	.....	Bars	(b)	(i)
	3	.....	.....		.....		.....	.....	⅝	.....	Bars	(b)	(m)
	4	.....	.....		.....		.....	.....	¾x ¾	.....	Wire cloth.....	(b)	(o)
28	1	1st part, 23 2d part, 16	5 5		6 6		1½	4	1	See Fig. 209....	Cast iron.....	(e)	(f)
28	1	(k) 4	5	1	1	7	.....	.....	1¼	8-lb. rails, flange up.	.....	(e)	(s)
30	1	45	12		6		1	3	1¼	.....	.....	(e)	(v)
	2	45	12		6		1	3	1¼	.....	.....	(e)	(s)
32	1	18	8		3		½	2	1½	Rectangular...	.....	(e)	(f)
34	1	26	7		4		.....	.....	1½	.....	.....	(e)	(f)
35	1	About 40	8		3	6	1	.....	1	Round bars....	.....	(e)	(f)
36	1	26	5		2		1¼	2½	1	Rectangular...	.....	(e)	(m)
40	1	45	13		29		½	2	1½	.....	.....	(a)	(s)
42	1	(k) 30 (d)	2	6	1	4	1	1	1	Round.....	Wrought iron.....	(g, v)	(m)
43	1	45	4		4		½	2	1	Rectangular...	Steel.....	(g)	(m)
44	1	(d) 23	14		4	6	2½	8	3½	Rectangular...	Cast steel..	e, t, v	(s)
	2	(d)	7		4	6	2½	6	3½	.....	Cast steel.....	e, t, v	(s)
46	1	34	12		4	9½	3½ top. 3 bottom.	9½	3¼	See Fig. 210..	Wood capped with iron	(a)	(s)
47	1	9	6	8½	7	4¼	4¼	14	28¾	See Fig. 212..	Cast iron capped with steel.....	(a)	(s)
	2	(d)	1	3	1	3	.....	.....	1	Rectangular...	.....	g & r	(o)
48	1	27	10		5		3½ top. 3 bottom.	9½	4	See Fig. 210..	Wood capped with iron.....	(a)	(h)
	2	27	6		5		1¼	1¼	3	.....	.....	(s & t)	(s)
54	1	.....	.....		.....		.....	.....	1½x1½	.....	Wire cloth.....	(e)	(s)
57	1	43	12		4		¾	3	2	.....	Wrought iron	(e)	(s)
59	1	Horizontal.	2		2		½	¾	3	Rectangular...	Chilled cast iron ..	(e)	(s)
61	1	34	7	6	3	4	(n)	(p)	(q)	Rectangular...	Chilled cast iron...	(e)	(s)
62	1	45	6	6	4		¾	3	(u)	Rectangular...	Wrought iron.....	(e)	(s)
64	1	45	12		4		½	3½	1⅜	Rectangular...	Iron.....	(e)	(s)
65	1	(d) 40	10		.....		3	3	1¾	Round	Old stamp stems..	e & v	(s)
68	1	40	9	6	3	6	⅝	2	1½	Rectangular...	.....	(e)	(s)
72	1	45	12		4		½	2	2	Rectangular...	.....	(e)	(s)
73	1	(d) 40	10		.....		3	3	1¾	Round.....	Old stamp stems...	e & v	(s)
74	1	(d) 40	10		.....		3	3	1¾	Round.....	Old stamp stems...	e & v	(s)
81	1	.....	.....		.....		.....	.....	.....	.....	.....	(e)	(s)
83	1	(d) 31	12		6		¾	2¼	1½	Rectangular ...	Wrought iron.....	e & v	(s)
84	1	40	18		8		⅝	2	1½	Rectangular...	.....	(e)	(s)
88	1	.....	.....		.....		2½ iron. 2 wood.	1¼ iron. 8 wood.	1½	See Fig. 211..	Wood capped with iron.....	(e)	(m)

(a) Picking floor. (b) Picking table. (c) Washing table. (d) Hand picking takes place on this grizzly. (e) Breaker. (f) Rolls. (g) Steam stamp. (h) No. 2 grizzly. (i) No. 3 grizzly. (k) Vibrating grizzly. (m) Screen. (n) 2¼ at upper end; 1 at lower end. (o) Jig. (p) 1⅝ at upper end; 1½ at lower end. (q) ½ at upper end; 1⅝ at lower end. (r) Log-washer bin. (s) Mill bin. (t) Dump. (u) 2⅝ on 3 grizzlies; 1½ on 1 grizzly. (v) Smelter.

Summary of Grizzlies and Gravel Screens.—Of the grizzlies that simply

screen the ore, among the 30 whose slopes are given, twelve slope 45°, five slope from 35° to 43°, and the others range all the way down to horizontal. Some ores will slide properly at 35°, but 40° or 45° is usually preferred. At a steeper slope than 45° the ore moves too fast to be properly screened; at less than 35° the ore will generally have to be raked forward. The duties of the grizzlies in this class (without hand picking) are as follows: Twenty relieve breakers, eight relieve spalling floors, three relieve picking tables, two relieve shipping ore, and one relieves steam stamps of fine ore.

The grizzlies that are used for hand picking combined with screening, with one exception, range in slope from 23° to 32°. At these angles the ore does not slide automatically, but is easily raked forward, thus facilitating both the picking and the delivery to the next machine. In one case the grizzly is horizontal. The duties of the grizzlies in this class are as follows: Six relieve breakers and one relieves steam stamps of fine ore, one relieves log washers and one relieves a jig of coarse ore, and one serves merely to remove the fines in order to facilitate the work of the pickers.

A satisfactory size of grizzly for gold mills appears to be about 4×12 feet. In the mills using jigs to concentrate ordinary lead or copper ores, the practice varies greatly; a grizzly 6×12 feet would meet the largest demand recorded. The grizzlies used for the native copper of Lake Superior vary from 5 to 8 feet in width and from 7 to 14 feet in length. Their bars are all made to stand very heavy work.

Inspection of Table 185 shows that grizzly bars for extra heavy work, and having wide spaces, are made of chilled cast iron, of cast steel, of wood capped with wrought iron or steel, and cast iron capped with steel angle bars; while grizzly bars for lighter work and smaller spaces are of flat, wrought iron or steel bars, on edge.

The wear upon grizzlies is so small that the cost per ton of ore is insignificant. The life of a few grizzlies is here given: 200,000 tons of ore in Mill 13; 25,000 tons in Mill 28; 3,675 tons in Mill 42; 200,000 tons in Mill 61; 18,000 tons wore off less than ⅛ inch from 3-inch bars in Mill 62; 140,000 tons in Mill 64; "worn but little in 10 years" in Mill 57; lasted 10 years in Mill 59; 5 years in Mill 68.

There does not seem to be much need of the grizzly to relieve the breaker of the fines, for it is everywhere economy to have a breaker of greater capacity than the mill. A grizzly must be used, however, where the tendency to form slimes is to be avoided, and it saves some wear on the jaws. Of the mills using breakers, stamps, amalgamating plates and vanners, 17 have grizzlies and 7 have not; of the mills using rolls, trommels and jigs, 15 have grizzlies and 18 have not; of the mills using steam stamps, classifiers and jigs, all of the six described use grizzlies.

§ 269. Perforated Plate and Wire Cloth Screens for Medium and Fine Work.—Mill 91 has two sets of stationary sloping screens made of perforated plates, both used for dry screening. The coarse set is about the same as a 14-mesh cloth screen, and is capable of screening crushed ore and the recrushed oversize to the extent of 300 tons of undersize per hour. Each screen slopes 45° and has a net perforated surface 22 inches long and 16 inches wide. One inch of blank margin is left all around for attaching it to its frame. The screen is made of crucible steel 0.03 inch thick, and has slots 0.5 inch long and 0.06 inch wide. The percentage of opening is 17.62%. Sand to be screened is fed to a tier of four screens, placed one above the other, but sloping opposite ways (see Fig. 214). The oversize of the first goes to the second, that of the second to the third and so on. The final oversize has, therefore, traversed 88 inches of screen. Three tiers, mounted side by side, 12 screens in all, make

a bank. Two banks are placed back to back for convenience. Four banks make a block, which are boxed in dust tight, 48 sieves in all. There are 5 blocks, making a total of 240 screens to turn out 300 tons of undersize per hour, about equivalent to 14-mesh wire cloth in size. It makes 200 tons per hour of oversize, which is recrushed and returned to the screen.

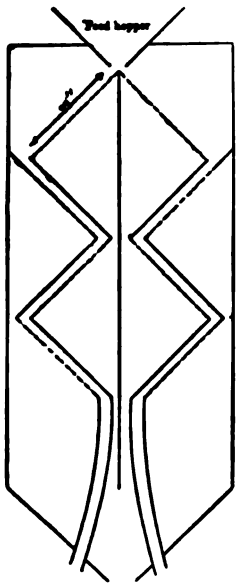

FIG. 214.—CROSS SECTION THROUGH A DOUBLE BANK OF EDISON SCREENS.

Edison has studied the trajectory of the particle on these screens and finds that with slots less than ½ inch long, the particles would largely fail to get through the holes. This rules out horizontal and diagonal slots. The objection to placing the slots in line, one below the other, is overcome by the irregularity of the path of the particle. He has not found anything to be gained by staggering the slots, which weakens the plates.

The fine set, made up of screens with slots somewhat coarser than 50-mesh wire cloth, make 135 tons of undersize per hour. These plates are of 0.02-inch crucible steel plate. The slots are 0.5 inch long, 0.02 inch wide. The spaces both ways are ⅛ inch, making 11.03% of opening. Mr. Edison estimates the wear at almost nothing after screening 80,000 tons of perfectly dry ore. He finds 1% of moisture in the ore multiplies the wear by about seven.

In regard to the thickness of plates for this class of screening, he prefers thin plates, as the tendency to blind is much less where there are fewer chances for points of contact, as is the case in the thin plates. The screens of this plant have never shown the slightest indication of blinding.

A test with a hand screen showed that 85% of the ore that was fine enough to pass through the mill screens did so.

The author understands that these screens have recently been adopted to displace trommels in Mill 92.

Stationary sloping screens of wire cloth are used in the rock house of Mill 13; also in Mills 6 and 7. The details of those in Mill 13 are as follows:

Grizzly No.	Slope.	Length.	Width.	Diameter of Wire.	Size of Hole.	Oversize goes to	Undersize goes to
	Degrees.	Feet.	Feet.	Inches.	Inches.		
2a	45	12	4½	0.259	0.75	No. 2b Grizzly	Trommel.
2b	.....	4	2	0.259	0.75	Picking table	Trommel.
3	45	4	2	0.259	0.75	Acid works..	No. 4 Grizzly.
4	45	4	2	0.22	0.5	Acid works..	Trommel.

The oversize of No. 2*a* is shoveled upon No. 2*b* in order to remove the fines that No. 2*a* does not remove.

RIDDLES AND VIBRATING GRIZZLIES.

§ 270. RIDDLES are shaking screens with plane surfaces. They may have less slope than fixed plane screens because the motion of the screen is transmitted to the ore, conveying the oversize toward the discharge end. Riddles are divisible into four groups: (*a*) Shaking screens, which have an endwise or sidewise motion in the plane of the screen, or nearly so, with or without a bump; (*b*)

Pulsating screens, which have an up and down motion, perpendicular, or nearly so, to the plane of the screen; (*c*) Gyrating screens with a circular or elliptical motion in the plane of the screen; (*d*) Gyrating screens with motion in a vertical plane parallel to their lengths. The screen plates or cloths of all these classes are mounted in frames of wood or iron, with or without supporting bars beneath the screen as may be needed.

The frames of the shaking screens are supported from suspending rods or chains above, and their slope regulated by winding or unwinding the chains at one end, holding it in place by rachet and pawl; or they may be supported upon toggles or wheels below, and their slope varied by elevating or depressing the supports of these at one end, by screws or wedges. The frames of the pulsating screens are pulsated by eccentrics below, transmitting power through springs, or by a cam, spring and bumping post above. These screens move in guides. The frames of gyrating screens are supported from suspending rods or by conical or spherical wobblers beneath, and the slopes regulated in the same way as for shaking screens. Shaking, pulsating and gyrating screens will all run more smoothly, and will shake the mill less if they have counterpoises to balance the shake.

In Mill 77 the tailings from the No. 1 Gilpin County bumping tables go to flat screens attached to and bumping with the No. 2 bumping tables 120 times a minute. These screens slope 20° and are made of 50-mesh brass wire, the width of the holes being 0.015 inches (0.38 mm.). Their undersize is treated on the No. 2 tables; their oversize is waste. The attempt to use trommels for this work was a failure, on account of the chokage and of excessive wear on the screen. Mill 86 uses the same method, with 40-mesh brass screen, bumping 150 times a minute, the oversize of this screen being re-ground. These two mills are under the same management.

In 1895 the Mayflower mill of Idaho Springs, Colo., had a screen with endwise throw, having 6 feet length and 3 feet width, 26° slope, suspended by rods, shaken by cam and gravity, having five sieves (2 mesh, 5 mesh, 10 mesh, 20 mesh and 40 mesh), but the author understands it has since been given up for trommels.

At the Philadelphia and Reading Coal and Iron Co.'s coal washer in Mahanoy City, Penn., two sets of end-shaking screens are arranged on opposite sides of a single shaft so as to balance one another. As a further means of preventing jar to the mill, they are run at 135 to 145 six-inch throws per minute instead of the 200 throws of 2 to 3 inches recommended by Rittinger. The screens are 9 feet long, 4 to 6 feet wide, with a slope of only $\frac{7}{8}$ inch per foot (4° 10′), and do excellent work. Three screens are arranged one above another in a single frame. The holes are round and range from $4\frac{1}{2}$ inches to $\frac{1}{16}$ inch in diameter.

The Sauer-Mayer riddle consists of three screens one above another in the same frame, which is suspended from above. The second and third screens slope in the opposite direction from the first, the slope in each case being 10°. The net lengths are respectively $1\frac{1}{2}$, 2 and $1\frac{1}{2}$ meters, the width $\frac{8}{10}$ meter. Beneath the first half of the upper screen is a shelf to carry the undersize to the head end of the second screen. The whole apparatus is shaken sidewise at the rate of 180 to 200 throws per minute, by means of two cranks and connecting rods. When using screens with 40, 20 and 10 mm. holes respectively the length of the throw is 80 mm., and the capacity is from 50,000 to 65,000 kilos (110,000 to 143,000 pounds) of coal per hour.[7]

The Ferraris shaking screen[47] is set horizontally on the upper ends of four laminated beechwood supports on each side. Driving is done by an adjustable eccentric running at 350 revolutions a minute with a throw of 25 to 32 mm. (1 to $1\frac{1}{4}$ inches). The supports slope upward and backward to the screen frame

at an angle of about 65° with the horizontal, and act as springs. The screen thus receives an upward, forward motion on the forward stroke and a downward, backward motion on the return stroke, which causes the ore to move rapidly forward. At Monteponi, Sardinia, a screen frame 700 mm. (27½ inches) wide, and 4 m. (13 feet 1 inch) long has a 14-mm. round hole screen on the first half of its length, followed by 20- and 30-mm. round hole screens. Four transverse spray pipes above the 14-mm. screen assist in removing the fines. The ore finer than 14 mm. goes to another screen, having 5-, 7- and 10-mm. round holes. When run in the usual way the screen does not work well for ore finer than 5 mm.; but Sanna has designed a successful modification for fines, in which the screen is suspended on sloping spring rods over a hopper-shaped box full of water, and just dips into the water on each backward downward stroke. This keeps the holes free, but the immersion must be only very slight or the forward movement of the ore will be hindered. Water is fed to the hopper-box constantly, to supply the spigot discharges, and the level is maintained by a con-

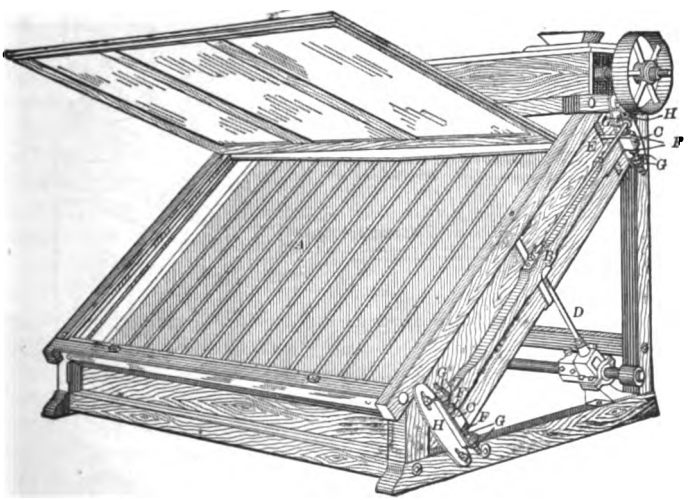

FIG. 215.—COLUMBIAN PULSATING SCREEN WITH COVER RAISED.

stant overflow. With this arrangement the screen is said to work without difficulty on ore as fine as 0.5 mm.

These screens have displaced trommels at Monteponi and other Sardinian plants; and at the former place 3 m. (9 feet 10 inches) of mill height was thereby saved. They require less power and have about double the capacity of trommels 1 m. (39.4 inches) in diameter, and the wear is so slight that the screen plates at Monteponi have not needed repairs in a year.

The Columbian pulsating screen (see Fig. 215), made by the Jeffrey Mfg. Co., is a wire cloth screen *A* mounted in a wooden frame with cross bars to support the screen, and set at a slope of about 40°. On each side of the frame is placed a hickory spring bar *B*, attached at its ends to the ends *C* of the screen frame. The eccentric rods *D*, which are perpendicular to the screen, are attached at the middle of these hickory bars. The screen frame, as it rises and falls with the eccentrics, slides in guides *E*, the amount of throw being limited by eight little adjustable buffers *F*, one above and one below each end of each spring bar. These buffers are held in place by lock nuts *G*. The slope of the screen can be varied by changing the positions of the buffers; also by changing

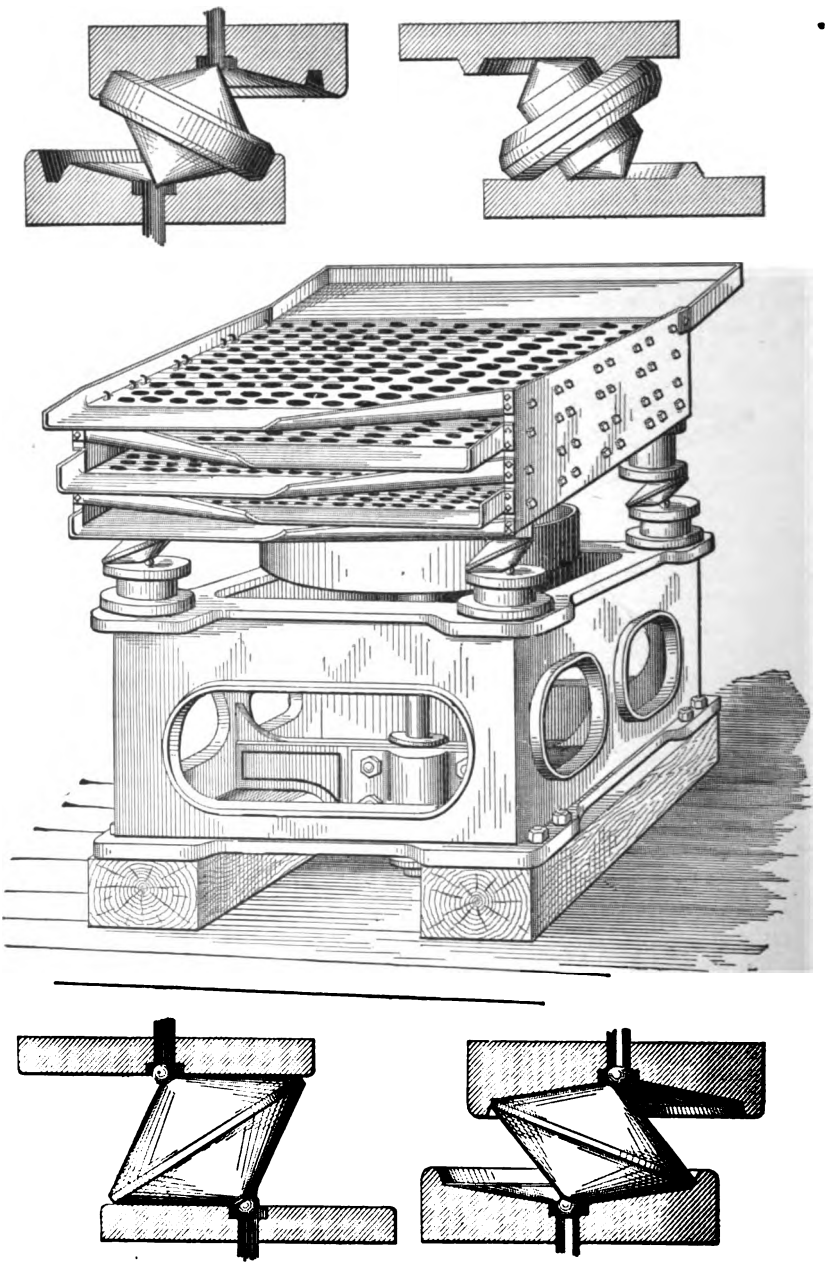

FIG. 216.—COXE GYRATING SCREEN.

the positions of the brackets *H* that support the buffers. The slope has a marked influence on the undersize product—the steeper the slope the finer will be the undersize. This fact permits the use of a screen that is considerably coarser than the desired undersize, the advantage being that the coarser screen is more durable.

The machine is made with a screen surface measuring 6 feet on the slope and either 4, 6 or 8 feet wide. It is run at 350 revolutions per minute, the usual length of throw being $\frac{9}{16}$ inch. A Portland cement works reports that 30 tons are screened in 10 hours through cloth with 40×50 mesh. The screen lasts 6 months, and the machine uses 5 horse power. A hard-pebble phosphate mill reports that the machine has 10 to 15 times the life of a round or hexagonal trommel, and will screen 8,400 pounds of hard-pebble phosphate per hour through 60 mesh.

The Coxe gyrating screen[17] usually has four sieves, 4 feet wide, 6 feet long, sloping about 5°, placed one above another in a box made of cast iron, 1 foot to 2 feet deep according to the number of sieves. Four sieves require a depth of 15 inches. The box is supported at the four corners upon rolling pieces, each in the form of two obtuse cones, placed base to base (see Fig. 216). They roll with their lower apices at the centers of discs upon the supporting frame. Upon the cones and attached to the under side of the screening box, are four other discs which roll upon the cones and complete the support of the box.

The gyrating crank is placed beneath the sifting box on a short vertical shaft, and for coal has a radius of about 2 inches, and a counter weight to balance the centrifugal force of the screens. The screens, when used for dry screening, make 145 gyrations per minute; when water is used, a higher rate is needed.

The capacity of this screen for anthracite coal is as follows: Pea (on $\frac{5}{8}$ inch) 16,800 pounds per hour; buckwheat (on $\frac{3}{8}$ inch) 12,000 pounds; rice (on $\frac{3}{16}$ inch) 9,600 pounds; barley (on $\frac{3}{32}$ inch) 6,000 pounds per hour.

Other gyrating screens are noticed in the bibliography.

In comparing the different riddles with each other, we may say in regard to capacity that the pulsating screen with steep slope has the greatest capacity. Next follow the gyrating screens and finally, the shaking screens. In regard to wear, the order has not been well proved, but it will probably be the same, the pulsating screen having the least, and the shaking screen the most. In regard to slope, the gyrating screen will have the least slope, next will follow the shaking screens, and finally the pulsating screen with its steep slope. In regard to slime making, those with least capacity will make the most slimes. In regard to expenditure of power and shaking of the mill, there is no reason in principle, why one should be placed before another, unless some special design may give that screen an advantage. In favor of the gyrating screen, the gentle slope admits of placing several screens under one another, which saves mill floor and height. The gyrating action also prevents blinding of holes.

Vibrating Grizzlies are used in two of the mills (see Table 185). Mill 28 has a grizzly 5 feet 1 inch long and 1 foot 7 inches wide, sloping 4°, made of 8-pound iron rails inverted. It is fed by a large hopper which narrows down to a discharge opening 30×15 inches. The bars are held upon the axles of two pairs of flanged wheels, which roll upon supporting rails. This grizzly is given a 6-inch longitudinal vibration 25 times a minute by means of a crank and connecting rod.

Mill 42 has little grizzlies 24×30 inches, sloping 30°, which are vibrated by a hammer motion like that of a Collom jig (see Fig. 217), the lower ends of the bars making 200 one-inch vertical throws per minute. As the double hammer *a* oscillates, the stirrup *d* is raised by the levers *b* and *c* alternately. Both

of these grizzlies have small size and gentle slope compared with the stationary form.

A Briart bar screen is used in Mill 94. Each bar is supported by an eccentric at the upper end, and is hung on a swinging support at the lower end. The eccentrics for half the bars are set at 180° from those for the alternate bars; and, at the lower ends each set rests on its own cross bar, the latter being suspended freely by links at the side of the screen. Either set of bars has an upward forward motion, while the other set is moving backward and downward. As the screen slopes only about 10°, the movement of the ore depends wholly

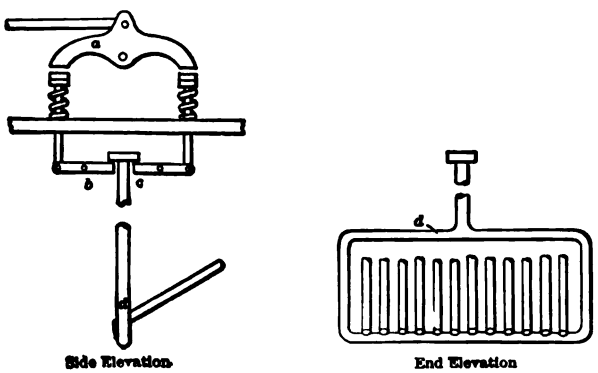

FIG. 217.—VIBRATING GRIZZLY AT MILL 42.

on the conveying action of the bars. The object of this device is to prevent a sudden rush of ore; and in coal cleaning plants (where it is chiefly used) the men can stand in front of it on the picking floor without danger. In Mill 94. it serves as an automatic feeder to a breaker.

Revolving Screens.

§ 271. Revolving Screens or Trommels may be divided into three classes: (*a*) Cylinders and prisms; (*b*) Cones and pyramids; (*c*) Spirals. They are designed to screen ore with but little fall, and to avoid the vibrations caused by shaking screens. This is made possible by causing the particles to slide by the revolution of the screen, instead of by the steep slope or the shaking movement used in other forms. When the ore is once in motion, a very slight slope in the direction of the length will cause it to move forward. The actual path of a particle upon the surface of the screen is in the form of a screw thread or helix, and it will be called the helical path. The capacity of a trommel when doing good work depends upon the speed with which it can separate grains above a certain size from those below that size.

In the use of trommels there are two practices. One seeks the minimum fall by using a very gentle slope, and to remedy the consequent thick bank of ore by increasing the length; but the result is that the thick ore bank hinders good screening, there is increased wear on the screen, and more power is required for driving. The other practice seeks for more individual treatment of the particles by using steeper slope. Incidentally, by the rapid passage of ore, and the consequent thin bank of ore, and by the lightness of the load at any moment, it obtains increased capacity, diminishes the necessary length of screen and the power to drive, and lessens the wear on the screen.

The dimensions and operation of trommels in the mills are shown in Tables 186 and 193.

TABLE 186.—DIMENSIONS AND OPERATION OF TROMMELS.

Abbreviations.—C=Two diameters of conical trommels; Gl=Beveled gears at lower end; Il=Gears with idler from trommel below; In.=Inches; Iu=Gears with idler from trommel above; L=Directly connected to log-washer shaft; Lbs.=Pounds; Pl=Pulley and belt at lower end; Pu=Pulley and belt at upper end; Sl=Sprocket at lower end from counter shaft; Stl=Sprocket from trommel at lower end; Stu=Sprocket from trommel at upper end; Su=Sprocket at upper end from counter shaft.

Mill Number.	Trommel Number.	Diameter.	Length. (a)	Diameter of Shaft.	Driving Mechanism.	Slope. Degrees.	Slope. Inches per foot.	Revolutions per Minute.	Centrifugal force acting on 1 pound of ore.
		In.	Inches.	In.					Lbs.
5	1	42 C 50 C	40	4½	L..	.....	....	....	.....
10	1	36	84	....	Pl..	4°45′	1	20	0.20
12	1	24	48	....	....	22°35′	5	20	0.14
15	1, 3	31 C 43 C	72	2 11/16	Su..	.....	....	21	0.19 0.27
	2	31 C 43 C	72	2 11/16	Sl..	.....	...	21	u.19 0.27
16	1	36	105	3	....	2°25′	0.5	16	0.13
17	1	36	46	3	....	5°55′	1.25	16	0.13
	2	36	69	3	....	4°10′	0.88	16	0.13
	3, 4	36	108	3	....	3° 0′	0.63	16	0.13
18	1	31 C 42 C	98	....	Pl..	3°15′	0.68	18	0.14 0.19
	2	36	96	....	Stu	3°15′	0.68	18	0.17
	3, 4	36	96	....	Iu..	4°30′	0.94	18	0.17
19	1–4	C	.....	....	....	.....	....	....	.....
20	1	30	72	2 7/16	Pu..	8°30′	1.79	8	0.03
	2	30	50	2 7/16	Gl .	14°	3	9½	0.04
	3, 4	30	63	2 7/16	Il..	9°35′	2.08	12	0.06
	5, 6	30	63	2 7/16	Gl .	9°35′	2.08	12	0.06
21	1	30	36	....	Il...	4°45′	1	25	0.27
	2	30	60	2 7/16	Il...	4°45′	1	25	0.27
	3	30	60	2 7/16	Sl..	4°45′	1	25	0.27
22	1	36	96	3	Stl.	3°	0.63	17	0.15
	2	36	124	3	Gl .	3°	0.63	17	0.15
	3	36	124	3	Gl .	3°	0.63	....	.....
23	1–3	36	108	....	....	3°35′	0.75	....	.....
24	"1 A"	36	34	2 7/16	Pl..	1°50′	0.38	18	0.17
	"1 B"	36	64	2 7/16	Pl..	3°45′	0.79	18	0.17
	2	36	123	2 7/16	Gl .	3°30′	0.73	14	0.10
	3	36	100	2 7/16	Pl..	3°	0.63	19	0.18
25	1	36	108	2¼	Gl .	3°55′	0.82	96	0.35
26	1	36	96	3 7/16	Gl .	7° 5′	1.5	25	0.32
	2	30	60	2 7/16	Gl .	4°45′	1	18	0.14
	3	30	60	2 7/16	Il...	3°35′	0.75	18	0.14
	4	30	60	2 7/16	Gl .	3°35′	0.75	18	0.14
	5, 6	30	60	2 7/16	Iu..	3°35′	0.75	18	0.14
27	1	36	159	3⅝	Sl..	3°30′	0.73	20 1/16	0.21
	2	36	80	3	Sl..	4°30′	0.94	20	0.20
	3	36	80	2⅞	Stl.	2°30′	0.52	20	0.20
	4, 7–9	36	80	2⅞	Sl..	4°30′	0.94	20	0.20
	5, 6	36	20	2⅞	Stl.	4°30′	0.94	20	0.20
28	1	34	(d) 63 (d) 39.5 (d) 31.5	3¼	Gl .	3°10′	0.66	17	0.14
	2	34	100	3¼	Gl .	3°10′	0.66	17	0.14
	3	34	47.5	3¼	Il...	4°45′	1	27	0.35
	4	34	47.5	3¼	Gl .	3°35′	0.75	27	0.35
	5	34	63	3¼	Pl..	2°25′	0.5	27	0.35
	6, 8	29	47.5	2¼	Il...	2°25′	0.5	22	0.20
	7, 9	29	47.5	2¼	Gl .	2°25′	0.5	22	0.20
29	1–5	.....	60	....	....	9°30′	2	30	.....
30	1	48	(d) 40 (d) 30 (d) 20	3	Sl..	3°	0.63	15	0.15
	2	36	(d) 40 (d) 30	3	Sl..	4°15′	0.89	16	0.13

Mill Number.	Trommel Number.	Diameter.	Length. (a)	Diameter of Shaft.	Driving Mechanism.	Slope. Degrees.	Slope. Inches per foot.	Revolutions per Minute.	Centrifugal force acting on 1 pound of ore.
		In.	Inches.	In.					Lbs.
30	3	36	48	....	Sl..	3°30′	0.73	16	0.13
31	(b) 3	36	48	....	....	3°35′	0.75	21	0.29
32	1, 2, 4	36	120	....	....	7°10′	1.5	17	0.15
	3	36	144	....	....	4°45′	1	17	0.15
33	1, 2	36	129	....	....	.....	....	....	0.15
34	1	40	60	....	Gl .	9°30′	2	16	0.14
	2	40	60	....	Iu..	3°50′	0.81	16	0.14
	3	40	60	....	Gl .	3°	0.63	16	0.14
	4	40	60	....	Iu..	2° 5′	0.44	16	0.14
	5	36	60	....	Stu	.....	....	....	.....
35	1	36	48	2 11/16	Il...	5°20′	1.13	24	0.29
	2	36	72	2 11/16	Gl .	5°20′	1.13	24	0.29
	3, 4	36	72	2 11/16	Iu..	5°20′	1.13	24	0.29
	5	36	48	2 11/16	....	5°20′	1.13	24	0.29
36	1–4	36	60	....	....	.....	....	....	.....
37	1–6	48	72	....	Sl..	.....	....	....	.....
	7	42 C 48 C	63	....	Pl..	.....	....	....	.....
38	1	36	48	2 11/16	Pl..	9°30′	2	12	0.07
	2	36	72	2 11/16	Pl..	5°55′	1.25	20	0.20
	3	36	72	2 11/16	Pl..	4°45′	1	16	0.13
	4, 5, 8	36	72	2 11/16	Pl..	5°55′	1.25	18	0.17
	6	36	72	2 11/16	Pl..	9°30′	2	18	0.17
	7	36	72	2 11/16	Pl..	5°55′	1.25	20	0.20
39	1	30	80	3 7/16	Pl..	4°45′	1	10	0.04
	2	c 36 42	c 60 40	3 7/16	Pl..	4°45′	1	10	0.05 0.06
	3	36	60	3	Il...	4°45′	1	14	0.10
	4	36	60	3	Gl .	4°45′	1	14	0.10
40	1	36	60	2 11/16	Pl..	9°30′	2	15.5	0.12
	2–5	36	72	2 11/16	Pl..	7°10′	1.5	15.5	0.12
41	1	36	72	....	Pl..	2°25′	0.5	20	0.20
	2	36	72	....	Pl..	1° 5′	0.23	20	0.20
	3–5	36	90	....	Pl..	1° 5′	0.23	20	0.20
42	1–5	36 C 42 C	72	3	....	4°45′	1	30	0.46 0.54
43	1	36	72	2 9/16	....	9°30′	2	21	0.22
	2, 3	30	72	2 7/16	....	9°30′	2	16	0.11
84	1	36	96	3¼	....	4°45′	1	20	0.20
86	1	36	60	3	Pl..	.....	....	27	0.37
	2–4	36	60	3	....	.....	....	27	0.37
	5	20	54	3	....	.....	....	....	.....
87	(e)	36	72	....	....	.....	....	....	.....
	1	36	104	....	Il...	2°	0.42	30	0.46
	2	36	104	....	Gl .	2°	0.42	30	0.46
	3, 4	36	104	....	Iu..	2°	0.42	30	0.46
88	1	32	60	1 7/8	Il...	2°	0.42	25	0.28
	2	32	60	1 7/8	Pl..	2°	0.42	25	0.28
	3	32	60	1 7/8	Iu..	2°	0.42	25	0.28
89	1	30	120	....	....	2°50′	0.6	14	0.08
	2	f 34 1/16	120	....	....	3°20′	0.7	14	.....
90	1	36	168	...	....	4° 5′	0.9	16	0.13
	2	g 40 69	144	....	....	.....	....	25	.....
92	1–3	36	72	....	Gl .	5°	1.05	15	0.12
	4–8	36	72	....	Gl .	5°	1.05	16	0.13
93	1–3	36	96	2 11/16	....	3°35′	0.75	22	0.25

(a) Lengths of conical trommels are measured on the slope. (b) The first two trommels in this mill are given in Table 193. (c) A cone followed by a cylinder. (d) This screen is in three sections (tandem), each with different size of holes. (e) Sampler. (f) Side or radii of hexagonal prism. (g) Side or radii of hexagonal pyramid.

Digitized by Google

Table 186 shows that there are, in the mills visited by the author, 143 cylinders, 14 cones, 1 cone and cylinder combined, 1 hexagonal prism, and 1 hexagonal pyramid, in a total of 160; from which it appears that cylindrical trommels meet with far more favor than any other form. They will therefore be discussed first.

§ 272. A CYLINDRICAL TROMMEL consists of a sloping shaft mounted upon boxes, and driven generally at the lower end (see Figs. 218 and 219). On the

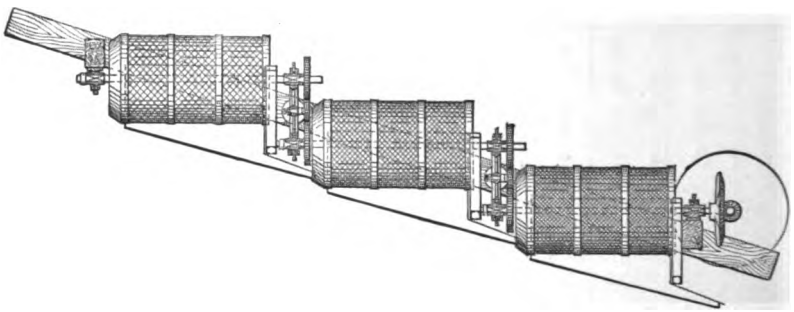

FIG. 218.—A SERIES OF TROMMELS DRIVEN BY TOOTHED GEARS.

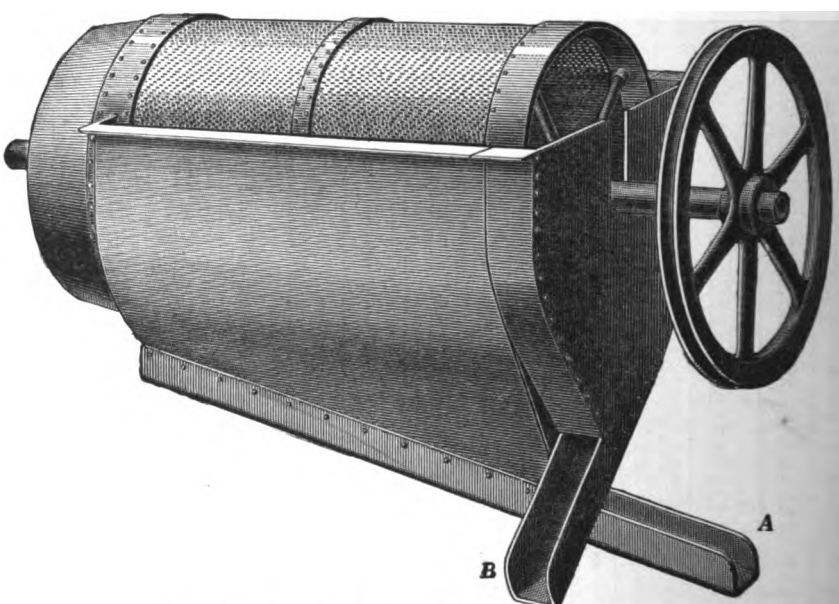

FIG. 219.—SHEET IRON TROMMEL HOUSING.

shaft are two or more spiders with radial spokes, to the ends of which is attached the screen plate or wire cloth wrapping around the spiders in cylindrical form. At the upper end of the cylinder is a short receiving cone of plate iron to prevent ore from backing out of the feed end. To catch the undersize, there is beneath the trommel, a casing of wood or iron, with either a semi-circular or a V-shaped cross section, and having its sides extended vertically somewhat above the axis of the trommel. The casing is so constructed that it delivers the undersize, which passes through the screen, in a spout near the lower end, and the

oversize in a second spout at the lower end. A dividing partition prevents these products from mixing. The casing has a steeper slope than the trommel.

The dimensions and adjustments of trommels deserve special study.

THE DIAMETER of the cylinders in the mills visited varies from 20 to 48 inches. Of the 135 diameters of cylindrical trommels recorded in Table 186, six are less than 30 inches; 18 are 30 inches; 8 are 32 or 34 inches; 92 are 36 inches, and 11 are more than 36 inches, showing 36 inches to be the favorite diameter. The number of revolutions per minute and other factors being the same, the larger the diameter of the trommel the wider and shallower will be the bank of ore, and consequently the better will be the screening; but the greater will be the tendency to blind up the holes, due to increased centrifugal force.

THE LENGTH of the cylinders varies, in the mills visited, from 34 to 168 inches. Of the 140 lengths of cylinders recorded, 17 are from 34 to 54 inches; 31 are 60 inches; 8 are from 63 to 69 inches; 35 are 72 inches; 10 are from 80 to 84 inches; 14 are from 90 to 100½ inches; 11 are from 103 to 108 inches; 4 are 120 inches; and 10 are from 123 to 168 inches, showing that 5 and 6 feet are favorite lengths, but that there is a considerable number up to 9 or 10 feet, and also below 5 feet in length. The trommel must be long enough to insure each particle a reasonable number of chances to pass through a hole. Evidently the deeper the ore bank the longer the trommel must be; but if the bank is too deep good screening is impossible. It is also affected by the size of the ore: the greater the proportion of undersize that is nearly as large as the screen holes the more difficult is the separation and therefore the longer should the trommel be. In the No. 1 trommel of Mill 23, which is very long (9 feet), the fines are well enough removed in the first half so that the undersize of the second half is sent directly to a jig, while that of the first half goes to the next trommel. The holes are 7 mm. in diameter in both halves.

THE SLOPE is a most important factor, as it largely affects both the capacity of the trommel and the quality of the products. Other things being the same, the steeper the slope the more rapid will be the passage through, the shallower will be the bank of ore, the more nearly will individual treatment of the particles be secured, and in consequence the greater will be the capacity. Obviously the slope cannot be increased to advantage indefinitely, because at 45° a flat screen works freely (when run dry), and the flat screen uses the whole area while the trommel uses only a narrow band of screen plate at one time.

The practice is as follows: 12 trommels slope from 1° 5′ to 2°; 18 slope from 2° 1′ to 3°; 23 slope from 3° 1′ to 4°; 38 slope from 4° 1′ to 5°; 11 slope from 5° 1′ to 6°; 9 slope from 7° to 8° 30′; 16 slope from 9 to 10°; and 2 slope 14° and 22° 35′ respectively. Stated in inches per foot: 4 trommels slope about ¼ inch per foot; 18 about ½ inch; 32 about ¾ inch; 36 about 1 inch; 11 about 1¼ inches; 8 about 1½ inches; 1 about 1¾ inches; 16 about 2 inches; 1 about 3 inches; and 1 about 5 inches per foot.

REVOLUTIONS range from 8 to 30 per minute, 16 to 20 being most common; 4 trommels make from 8 to 10 revolutions per minute; 19 make 12 to 15½ revolutions; 64 make 16 to 20 revolutions; 26 make 20½ to 25 revolutions; and 22 make 26 to 30 revolutions per minute.

Increase of revolutions within certain limits increases speed of conveying the particles through the trommel, which thins the ore banks and thereby improves screening. This speed is dependent on two facts: (*a*) The particle is carried up the side of the trommel and rolls down to a point nearer the lower end of the trommel than that at which it started, its path in space having the form of a saw tooth; (*b*) Centrifugal force makes the ore cling to the side and carries it higher, but makes the angle of the saw tooth, or pitch angle of the helical path,

narrower. The more rapid revolution, then, loses on conveying speed by diminishing the pitch angle, but gains more than it loses, by the increased number of saw teeth in its path per minute. This increase of speed of conveying the ore through the trommel goes on with increased revolutions until that speed is reached at which the ore will be carried over by centrifugal force, and when this speed is attained conveying power is at an end. Another fact, however, completely vetoes this use of rapid revolutions for gaining speed of screening, and that is the fact that as centrifugal force increases it tends to blind the holes of the screen, and this hindrance is so serious that it condemns altogether the seeking of great capacity by high speed of revolutions; 20 revolutions for a 36-inch trommel is as fast as should be recommended. In Mill 35, trommels 36 inches in diameter were run at 24 revolutions, which proved to be too fast. In the opinion of the manager 18 revolutions would have been right.

§ 273. The construction of trommels and details of the screens are given in Tables 187 and 188.

TABLE 187.—CONSTRUCTION OF TROMMELS; AND MATERIAL OF THE SCREENS.

Abbreviations.—Ac.=Hubs are cast on to wrought iron spider arms; Ar.=Flat wrought iron spider arms are riveted to bosses on the hubs; As.=Spider arms are screwed into the hubs, and held in place by lock nuts; Ash.=Shoulders on ends of spider arms to carry the bands, see § 275; Bb.=Wrought iron bands are bolted to the T ends of the spider arms; Br.=Wrought iron bands are riveted to the T ends of the spider arms; H.=An outside wrought iron hoop at each spider, drawn together by tightening bolts; In.=Inches; P.=Punched plate; Pc.=Cast iron plate; Pf.=Punched flange iron plate; Pi.=Punched iron plate; Ps.=Punched steel plate; Sbb.=Screens are bolted to the wrought iron bands; Sbt.=Screens are bolted to the T ends of the spider arms; Sf.=Screens are held in segmental wrought iron frames that are carried by the spiders; Srb.=Screens are riveted to the wrought iron bands; W.=Wire cloth; Wb.=Brass wire cloth; Ws.=Steel wire cloth.

Mill Number.	Trommel Number.	Spiders. Number.	Spiders. Number of Arms.	Attachment of Screens to Spiders.	Other Features of Construction.	Material of Screen.	Meshes (per in.) of Wire Cloth	Diameter of Wire.	Thickness of Plate.
								In.	In.
5	1	1	3	.....	.....	Ps.	....	.....	.....
10	1	....	....	.....	.....	Ps.	....	.....	0.165
12	1	....	....	.....	.....	W.	2	.....	.....
15	1	....	4	.....	Ar.	Ps.	....	.....	0.165
	2	....	4	.....	"	"	....	.....	0.134
	3	....	4	.....	"	"	....	.....	0.065
16	1	....	....	(a)	Ac.	Pi.	....	...	0.049 0.109 0.134
17	1	....	....	(a)	"	"	....	.....	0.134
	2	....	....	(a)	"	"	....	.....	0.109
	3	....	....	(a)	"	"	....	..	0.065 0.083
	4	....	....	(a)	"	"	....	...	0.049 0.065
18	1	4	6	Sbt.H.	(e)	Ws.	4	0.109	.....
	2	5	6	"	.....	"	6	0.083	....
	3	5	6	"	.....	"	8	0.065	.....
	4	5	6	.....	.....	"	10	0.049	.....
19	1	....	....	.....	.....	"	3	.....	.....
	2	....	....	.....	.....	"	5	.....	.....
	3	....	....	.....	.....	"	8	.....	.....
	4	....	....	.....	.....	"	10	.....	.....
20	1	3	5	BrSbbH	As.	Wb.	2½	0.148	.....
	2	....	5	"	"	"	2½	0.148	.....
	3	3	5	"	"	"	4	0.109	.....
	4	3	5	"	"	"	5	0.095	.....
	5	3	5	"	"	"	8	0.065	.....
	6	3	5	"	"	"	8	0.065	.....
21	1	2	4	BrH.	"	Ws.	3½	0.105	.....
	2	3	4	"	"	"	5	0.063	.....
	3	3	4	"	"	"	12	0.063	.....
22	1	3	4	BrH.	"	Ps.	....	.....	0.165
	2	4	4	BrSrb.	"	"	....	.....	0.134
	3	4	4	"	"	"	....	.....	0.083
23	1-3	....	....	.....	.....	"	....	.....	.....
24	1A	2	4	BrSrb.	"	Pf.	....	.....	0.109
	1B	3	4	"	"	"	....	.....	0.109
	2	5	4	"	"	"	....	.....	0.095
	3	4	4	"	"	"	....	...	0.065 0.083
25	1	4	4	"	"	Ps.	....	.....	0.185
26	1	3	5	H.	(d)	Pi.	....	.....	0.500
	2	3	4	BrH.	As.	Ws.	3	0.109	.....
	3	3	4	"	"	"	4	0.109	.....
	4	3	4	"	"	"	6	0.083	.....
	5	3	4	"	"	"	8	0.065	.....
	6	3	4	"	"	Wb.	14	0.083	.....
27	1	4	6	Sbb.	AsAsh	Ps.	....	...	0.250 0.250 0.250
	2	3	4	"	"	"	....	.....	0.250
	3	3	4	"	"	"	....	.....	0.165
	4	3	4	"	"	"	....	.....	0.165
	5	3	4	"	"	"	....	.....	0.134
	6	3	4	Sf.	As.	"	....	.....	0.109
	7	3	4	"	"	"	....	.....	0.083
	8	3	4	"	"	"	....	.....	0.049
	9	3	4	Sbb.	AsAsh	"	....	.....	0.134
28	1	4	4	SbtH.	As.	Ps.	....	...	0.180 0.203 0.203
	2	3	4	"	"	"	....	.....	0.180
	3	2	4	"	"	"	....	.....	0.180
	4	2	4	"	"	"	....	.....	0.165
	5	2	4	"	"	"	....	.....	0.134
	6	2	4	"	"	"	....	.....	0.095
	7	2	4	"	"	"	....	.....	0.065
	8	2	4	"	"	"	....	.....	0.095
	9	2	4	"	"	"	....	.....	0.065
29	1	....	....	.....	.....	P.	....	.....	.....
	2	....	....	.....	.....	"	....	.....	.....
	3	....	....	.....	.....	"	....	.....	.....
	4	....	....	.....	.....	"	....	.....	.....
	5	....	....	.....	.....	"	....	.....	.....
30	1	4	6	H.	As.	Ps.	....	.....	0.250 0.313 0.375
	2	4	6	"	"	"	....	.....	0.083 0.134 0.188
	3	3	6	"	"	"	....	.....	0.83 0.134
31	(k) 3	....	....	.....	.....	P.	....	.....	.....

TABLE 187.—CONSTRUCTION OF TROMMELS; AND MATERIAL OF THE SCREENS.—*Concluded.*

Mill Number.	Trommel Number.	Spiders. Number.	Spiders. Number of Arms.	Attachment of Screens to Spiders.	Other Features of Construction.	Material of Screen.	Meshes (per in.) of Wire Cloth.	Diameter of Wire.	Thickness of Plate.
								In.	In.
32	1–4	....	....	BrH.	As.	P.	....	....	....
33	1–2	5	....	....	....	Ps.	....	....	....
35	1	3	4	H.	As.	"	....	....	0.259
	2	4	4	"	"	"	....	....	0.165
	3	4	4	"	"	"	....	....	0.134
	4	4	4	"	"	"	....	....	0.068
	5	3	4	"	"	"	....	....	0.065
36	1–4	....	....	....	....	P.	....	....	....
37	1–3	3	4	....	....	Ps.	....	....	0.250
	4	3	4	....	....	"	....	....	0.188
	5	3	4	....	....	"	....	....	0.125
	6–7	3	4	....	....	"	....	....	....
38	1	2	4	BrH.	As.	Pc.	....	....	0.625
	2	3	4	"	"	Ps.	....	....	0.313
	3	3	4	"	"	"	....	....	0.220
	4	3	4	"	"	"	....	....	0.109
	5	3	4	"	"	"	....	....	0.049
	6	3	4	"	"	"	....	....	0.049
	7	3	4	"	"	"	....	....	0.220
	8	3	4	"	"	"	....	....	0.109
39	1	5	6	"	"	Pc.	....	....	0.750
	2	4	6	"	"	Ps. Pc.	....	....	0.259 0.750
	3	4	6	"	"	Ps.	....	....	0.203
	4	4	6	"	"	"	....	....	0.120
40	1	3	4	Sbt.	....	"	....	....	0.500
	2	3	4	"	....	"	....	....	0.188
	3	3	4	"	....	"	....	....	0.134
	4	3	4	"	....	"	....	....	0.109
	5	3	4	"	....	"	....	....	0.109
41	1	3	....	....	....	P.	....	....	....
	2–5	....	....	....	....	"	....	....	....

Mill Number.	Trommel Number.	Spiders. Number.	Spiders. Number of Arms.	Attachment of Screens to Spiders.	Other Features of Construction.	Material of Screen.	Meshes (per in.) of Wire Cloth.	Diameter of Wire.	Thickness of Plate.
								In.	In.
42	1–5	3	6	....	Ac.	Ps.	....	....	....
43	1	4	6	BrH.	As.	Ps.	....	....	0.188
	2	4	4	"	"	"	....	....	0.100
	3	4	4	"	"	"	....	....	0.065
84	1	3	....	BbSbbH	....	Pc.	....	....	....
85	1	....	....	....	....	W.	4	....	....
	2	....	....	....	....	"	8	....	....
	3	....	....	....	....	"	12	....	....
86	1	....	....	BrH.	As.	Ps.	....	....	0.188
	2	....	....	"	"	"	....	....	0.148
	3	....	....	"	"	"	....	....	0.083
	4	....	....	"	"	"	....	....	0.035
	5	....	....	"	"	Wb.	16	0.028	....
87	(s)	....	....	....	....	Ws.	2	....	....
	1	....	....	....	....	"	4 3	....	....
	2	....	....	....	....	"	6	....	....
	3	....	....	....	....	"	8	....	....
	4	....	....	....	....	"	12	....	....
88	1	3	5	H.	As.	"	3	....	....
	2	3	5	"	"	"	6	....	....
	3	3	5	"	"	"	10	....	....
89	1–2	....	....	....	....	Ps.	....	....	....
90	1	....	....	....	....	"	....	....	0.188
	2	....	....	....	....	P. or W.	20	....	....
92	1	....	....	....	....	Ws.	....	0.25	....
	2	....	....	....	....	"	8	0.040	....
	3	....	....	....	....	"	10	0.040	....
	4	....	....	....	....	"	....	....	....
	5	....	....	....	....	"	16	0.025	....
	6	....	....	....	....	"	24	0.010	....
	7	....	....	....	....	"	30	0.010	....
	8	....	....	....	....	Wb.	50	0.010	....
93	1–3	....	....	....	Ac.	P.	....	....	....

(*a*) Screen and band riveted together to T ends of arms. (*d*) Friction roller support at one end, see Fig. 220. (*e*) Cams and hammers, see § 290. (*k*) The first two trommels in this mill are given in Table 193. (*s*) Sampler.

SHAFTS are made of wrought iron or mild steel, and Table 186 shows a range of diameter from $1\frac{7}{8}$ to $3\frac{7}{8}$ inches, according to size of trommel. A $2\frac{1}{2}$-inch shaft is satisfactory for a 30-inch trommel, 60 inches long; and a 3-inch shaft is satisfactory for a 36-inch trommel, 72 inches long. Mill 22 reports that a $2\frac{1}{8}$-inch shaft proved too light for a 36×96-inch trommel, and that a 3-inch shaft proved satisfactory. Mill 5 uses a $4\frac{1}{2}$-inch shaft for a conical trommel with 42-inch and 50-inch diameters and 40-inch length. This large

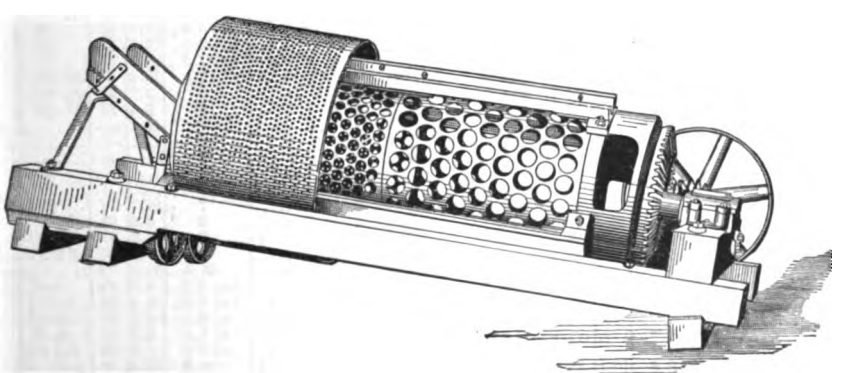

FIG. 220.—A TROMMEL WITHOUT INTERNAL SHAFT.

size is needed because the trommel is supported at one end only (see *Q*, Fig. 191*b*).

Very heavy trommels, using cast iron screen plates are sometimes mounted with friction rollers at the upper end and a gudgeon at the lower end (see Fig. 220). In the sides of the gudgeon are large holes to let the oversize fall out. No. 1 trommel in Mill 26 is an instance of this.

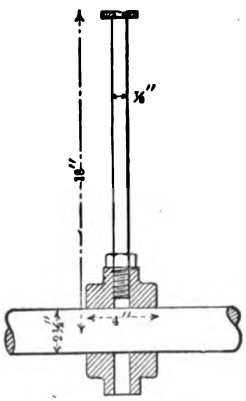

FIG. 221.—DETAIL OF SHAFT AND SPIDER FOR A TROMMEL.

THE SPIDERS are generally attached to the shaft by key and set screw, the key being desirable to guarantee the exact position of the spider on the shaft. The arms, which are generally of round iron, are attached to the hubs, in 75 of the trommels shown in Table 187, by screwing them into bosses on the hubs and holding them in place by lock nuts (see Fig. 221); and in 13 trommels by casting the hubs on the wrought iron arms. The ends of these arms are usually provided with *T* pieces welded to them. In 3 trommels the arms are attached by riveting flat iron arms to flat bosses cast on the hubs. The outer ends of these flat arms are bent at right angles to give a support for the screen.

The number of spiders is from 1 to 5, depending on the length of the trommel: 1 trommel has one; 10 have two; 55 have three; 18 have four; and 7 have five spiders. A spider has from 3 to 6 arms, generally 4. The argument for numerous arms is that they will make a more perfect cylinder; the argument for a small number is that with fewer arms to wear out the cost of repairs is less.

The distance between spiders should depend on the strength of the screen

TABLE 188.—LIFE, COST AND DETAILS OF TROMMEL SCREENS.

Abbreviations.—bet.=between; No.=number.

Mill No.	Trommel Number.	Maximum Size of Feed.	Diameter of Holes.	Distance bet. Centers	% Area of Discharge.	Life in days of 24 hours.	Cost of Screen for one Trommel.
		Mm.	Mm.	Mm			
5	1	86.9	4.8	12.7	13.0	(*h*) 100	.....
10	1	(*b*) 19.1	12.7	....	....	35	$35.00
12	1	.....	(*a*) 2 mesh	....	....	.....	.....
15	1	(*r*) 19.1	12.4	....	....	72	.....
	2	12.4	4.7	....	....	72	.....
	3	4.7	2.3	....	....	48	.....
16	1	(*b*) 20	2	4	23	125	.....
			10	14.3	44	250	.....
			20	23.6	44	375	.....
	2	10	5	....	....	.....	.....
17	1	(*b*) 15	15	22.2	41	(*h*) 165	.....
	2	15	10	14.3	44	(*h*) 165	.....
	3	10	5	7.9	40	(*h*) 125	.....
			7	11.1	40	(*h*) 125	.....
	4	5	2	4	23	(*h*) 125	.....
			3.5	6.4	30	(*h*) 165	.....
18	1	(*b*) 38.1	(*a*) 3.6	6.4	32	.....	.....
	2	3.6	(*a*) 2.1	4.2	25	.....	.....
	3	2.1	(*a*) 1.5	3.2	22	.....	.....
	4	1.5	(*a*) 1.3	2.5	27	.....	.....
19	1	.....	(*a*) 3 mesh	....	....	.....	.....
	2	.....	(*a*) 5 "	....	....	.....	.....
	3	.....	(*a*) 8 "	....	....	.....	.....
	4	.....	(*a*) 10 "	....	....	.....	.....
20	1	(*g*) 38.1	(*a*) 6.4	10.2	39	84–140	44.76
	2	(*r*) 12.7	(*a*) 6.4	10.2	39	126–175	22.38
	3	6.4	(*a*) 3.6	6.4	32	.....	36.91
20	4	3.6	(*a*) 2.7	5.1	28	84–175	$35.91
	5	2.7	(*a*) 1.5	3.2	22	84–175	25.91
	6	.....	(*a*) 1.5	3.2	22	.....	.....
21	1	(*r*) 6.4	(*a*) 4.6	7.3	40	70	3.53
	2	4.6	(*a*) 3.5	5.1	47	28	6.22
	3	3.5	(*a*) 1.2	2.1	33	28	7.35
22	1	(*r*) 10	12	18.4	39	(*h*) 105	30.59
	2	12	6	9.2	39	(*h*) 80	30.00
	3	6	3	5.4	31	(*h*) 80	35.90
23	1	.....	7	....	....	.....	.....
	2	7	5	....	....	.....	.....
	3	5	2	....	....	.....	.....
24	"1 A"	(*b*) 12.7	10	....	....	50	5.00
	"1 B"	(*r*) 8.5–12.7	10	....	....	72	10.00
	2	.....	7	16.7	16	60	(*d*) 24.00
	3	7	3	5.6	26	(*h*) 38	7.00
			5	7.9	36	(*h*) 60	4.00
25	1	.....	6	9.3	38	105	26.64
26	1	(*b*) 63.5	31.8	50.8	35	.....	.....
	2	(*r*) 6.4	(*a*) 5.7	8.5	45	35–42	5.50
	3	5.7	(*a*) 3.6	6.4	32	56–70	8.25
	4	3.6	(*a*) 2.1	4.2	25	56–70	8.25
	5	2.1	(*a*) 1.5	3.2	22	56–70	8.25
	6	1.5	(*a*) 0.9	1.8	25	112–140	30.00
27	1	.....	15.9	25.4	36	42–56	.....
			25.4	38.1	40		
			38.1	54.0	45		

TABLE 188.—LIFE, COST AND DETAILS OF TROMMEL SCREENS.—*Concluded.*

Mill No.	Trommel Number.	Maximum Size of Feed.	Diameter of Holes.	Distance bet. Centers	% Area of Discharge.	Life in days of 24 hours.	Cost of Screen for one Trommel.
		Mm.	Mm.	Mm			
27	2	.....	15.9	25.4	36	70	.....
	3	15.9	12.7	19.1	40	56	.....
	4	12.7	10.3	14.3	47	56	.....
	5	10.3	8.3	12.7	39	42–56	.....
	6	8.3	4.4	7.9	27	42	.....
	7	4.4	2.8	5.6	23	28–35	.....
	8	2.8	2.	3.2	35	28–35	.....
	9	(r) 3.2	8.3	12.7	39	42–56	.....
28	1	(b) 31.8	16	22.2	47	75	.....
			25	35.7	44	100	.....
			40	54.8	48	100	.....
	2	(r) 3.2	16	22.2	47	100	.....
	3	16	12	19	36	150	.....
	4	12	8	13.1	34	112–125	.....
	5	8	5	7.9	36	88–100	.....
	6	5	3.5	7.1	22	75	.....
	7	3.5	2	4.8	16	68	.....
	8	.....	3.5	7.1	22	.....	.....
	9	3.5	2	4.8	16	.....	.....
29	1	(r) 38.1	8	....	....	....	.....
	2	8	6	....	....	.....	.....
	3	6	4	....	....	.....	.....
	4	4	3	....	....	.....	.....
	5	3	2.5	....	....	.....	.....
30	1	(r) 12.7	10	15.9	36	(h) 120	.....
			15	22.2	41	(h) 150	.....
			25	38.1	39	(h) 240	.....
	2	10	3	6.4	20	42–56	.....
			5	11.1	18	42–56	.....
			7	14.3	19	84–112	.....
			2.5	6.4	14	150	$6.00
	3	.....	5	11.1	18	150	6.00
31	(c) 3	.....	2.5	....	....	.....	.....
32	1	(r) 3.2	8	....	....	28	.....
			12	....	....	40	.....
	2	8	3	....	....	20	.....
			6	....	....	25	.....
	3	12	5	....	....	168	.....
	4	8	2	....	....	49	.....
			5	....	....	56	.....
			7.9	....	....	.....	.....
33	1	.....	12.7	....	....	.....	.....
	2	7.9	3.3	....	....	.....	.....
			5.1	....	....	.....	.....
34	1	.....	15	....	....	.....	.....
	2	15	11	....	....	.....	.....
			13	....	....	.....	.....
	3	11	7	....	....	.....	.....
			9	....	....	.....	.....
	4	7	3	....	....	.....	.....
			5	....	....	.....	.....
	5	11	3	....	....	.....	.....
35	1	(r) 12.7	16	25.4	36	84	9.00
	2	16	9	15.9	29	84	9.00
	3	9	5	7.9	36	56	9.00
	4	5	3	6.4	20	42	9.00
	5	.....	2.5	....	....	84	9.00
36	1	.....	12.7	....	....	.....	.....
	2	12.7	7.9	....	....	.....	.....
	3	7.9	5.1	....	....	.....	.....
	4	5.1	3.3	....	....	.....	.....
37	1	.....	25.4	....	....	.....	.....
	2	.....	25.4	....	....	.....	.....
	3	.....	12.7	....	....	.....	.....
	4	.....	9	....	....	.....	.....
	5	.....	6	....	....	.....	.....
	6	.....	3	....	....	.....	.....
	7	.....	1.5	....	....	.....	.....
			2.5	....	....	.....	.....

Mill No.	Trommel Number.	Maximum Size of Feed.	Diameter of Holes.	Distance bet. Centers	% Area of Discharge.	Life in Days of 24 Hours.	Cost of Screen for one Trommel.
		Mm.	Mm.	Mm			
38	1	(b) 38.1	38.1	50.8	50	168	.....
	2	38.1	22.2	31.7	44	84	.....
	3	22.2	9.5	15.9	32	56	.....
	4	9.5	5	7.9	36	56	.....
	5	5	2.5	4.8	25	14	.....
	6	9.5	2.5	4.8	25	.....	.....
	7	.....	9.5	15.9	32	.....	.....
			22.2	31.7	44	.....	.....
	8	9.5	5	7.9	36	.....	.....
39	1	(b) 63.5	38.1	50.8	50	42	.....
			54	73	50	42	.....
	2	38.1	15	25.4	32	42	.....
			38.1	50.8	50	63	.....
	3	15	8.5	14.3	32	49	.....
	4	8.5	4.5	7.9	29	28	.....
40	1	(b) 50.8	20	34.9	30	168	$102.30
	2	20	7	12.7	28	112	49.50
	3	7	4.5	7.9	29	84	45.55
	4	4.5	3	6.4	20	84	41.00
	5	.....	3	6.4	20	70	41.00
41	1	.....	15.9	....	....	.....	.....
	2	15.9	9.5	....	....	.....	.....
	3	9.5	6.4	....	....	.....	.....
	4	6.4	3.2	....	....	.....	.....
	5	.....	3.2	....	....	.....	.....
42	1	(g) 25.4	6.4	....	....	.....	.....
	2	(g) 25.4	12.7	....	....	42	.....
	3	12.7	6.4	....	....	.....	.....
	4	12.7	6.4	....	....	.....	.....
	5	.....	2.5	....	....	42	.....
43	1	(g) 25.4	11.1	15.9	44	365	.....
	2	.....	3	....	....	60	.....
	3	3	2	....	....	.....	.....
84	1	(b) 76.2	25.4	63.5	11	600	.....
85	1	(b) 38.1	(a) 4 mesh	....	....	.....	.....
	2	.....	(a) 8 "	....	....	.....	.....
	3	.....	(a) 12 "	....	....	.....	.....
86	1	(r) 12.7	9	....	....	30	.....
	2	9	6.5	....	....	35	.....
	3	6.5	3	....	....	25	.....
	4	3	1.25	....	....	35	.....
	5	.....	(a) 0.88	....	....	.....	.....
87	(f)	(r) 12.7	(a) 2 mesh	....	....	.....	.....
	1	(r) 6.4	(a) 4 mesh	....	....	.....	.....
			(a) 3 mesh	....	....	.....	.....
	2	.....	(a) 6 mesh	....	....	.....	.....
	3	.....	(a) 8 mesh	....	....	.....	.....
	4	.....	(a) 12 "	....	....	.....	.....
88	1	(r) 12.7	(a) 3 "	....	....	(h) 120	.....
	2	.....	(a) 6 "	....	....	(h) 120	.....
	3	.....	(a) 10 "	....	....	(h) 120	.....
89	1	(b) 19.1	25.4	....	....	.....	.....
	2	.....	2.1	....	....	.....	.....
90	1	(r) 38.1	19.1	63.5	8	.....	.....
	2	.....	(a) (e)	....	....	.....	.....
92	1	(b) 19.1	(a) 6.4	....	....	.....	.....
	2	6.4	(a) 2.2	3.2	47	.....	.....
	3	2.2	(a) 1.5	2.5	36	.....	.....
	4	.....	(a) 25.4	....	....	.....	.....
	5	1.5	(a) .94	1.59	30	.....	.....
	6	.94	(a) .81	1.06	50	.....	.....
	7	.81	(a) .58	.85	40	.....	.....
	8	.58	(a) .25	.50	25	.....	.....
93	1	.....	6	9.2	39	(h) 260	.....
	2	.....	3.5	5.9	32	(h) 260	.....
	3	.....	2	3.6	28	(h) 260	.....

(a) Square holes; those not designated are round. (b) Breaker set for this size; there are undoubtedly some larger pieces. (c) The first two trommels in this mill are given in Table 193. (d) Include cost of putting on. (e) 6.4 mm. to 20 mesh. Screen varied to suit customers. (f) Sampler. (g) Width of grizzly spaces; longer flat pieces may pass through the grizzly. (h) Approximately. (r) Rolls set for this size; there are undoubtedly some larger pieces.

plate or cloth, and the weight of ore carried at one time. The distances in the mills are:

Plate Screens. Number of Trommels.	Wire Cloth Screens. Number of Trommels.	Spaces.	Plate Screens. Number of Trommels.	Wire Cloth Screens. Number of Trommels.	Spaces.
		Inches.			Inches.
3	.....	20	10	.....	40
9	3	24	2	.....	41
.....	14	30	10	.....	48
8	1	32	1	.....	50
2	.....	33	1	.....	53
2	.....	34	1	.....	63
22	2	36			

For plate screens the most common distance is 36 inches, but for wire cloth screens it is only 30 inches. It is necessary to have the spiders nearer together for cloth screens on account of the flexibility of the cloth. At the Rapid City Chlorination Works, where the trommels were covered with 16-mesh wire cloth, the weight of the ore caused the cloth to sag between the spiders, and this constant bending back and forth broke the screen.[11]

§ 274. Material for Screens.—The screening surface or screen proper is made of various materials: 77 trommels use steel plate; 6 wrought iron plate; 4 flange iron plate; 4 cast iron; and 22 plate (kind not named); while 30 use steel wire cloth; 9 brass wire cloth; and 4 wire cloth (kind not named); a total of 113 plate screens and 43 wire cloth screens. From this list it is evident that plate is preferred to wire, and that steel predominates over other material for both plate and wire.

In regard to the relative advantages of punched plate and wire cloth, the following notes embody the experience of various mill men and other authorities. Plate lasts longer than cloth (Mills 16, 17, 32, 86 and 93), and generally costs less per ton of ore screened (Mill 86), though occasionally it is more expensive on account of high freight charges, due to its greater weight. It is stronger and therefore less liable to breakage than cloth (Mill 84), and it is more easily repaired when broken. In wire screens the size of the holes is not increased so much before wearing out as in the case of plate, and therefore there is less variation in the screen products; but ordinary cloth has the disadvantage that the wires are liable to spread and leave the holes very irregular in size. This difficulty, however, is overcome by the "double crimped" cloth such as is made by the W. S. Tyler Co. This "double crimped" cloth has been found to wear about twice as long as "single crimped" at Mill 20. Wire cloth generally has a larger percentage of opening and therefore somewhat greater capacity than punched plate. It however has the disadvantage that the round section of the wire makes the holes taper downward, and this with the square shape of the holes and the uneven surface of the cloth tends to blind up the screen, especially when there is considerable fibre and chips (Mills 32, 38 and 86). Mill 86 discarded wire screens for mine ore on account of chips and fibre, but uses it for reground middlings on account of the smaller variation in the size of holes by wear. Cloth is more liable to break before wearing out than plate, because its flexibility permits it to bend more.

The corroding agents which call for a special metal are sulphuric acid in iron pyrites mines, and copper sulphate in mines carrying copper sulphides. Carbonic acid may be a source of trouble, but it is not so powerful an agent of destruction as the other two substances. Copper and its alloys are the best materials for overcoming these difficulties. Kunhardt[6] says that, for plate screens with holes finer than 2 mm., copper is better than iron; the former wears by abrading only, the latter by abrading and corroding. At Clausthal, in one case, copper cost 1.8 times as much as iron, but lasted 2.4 times as long.

12 months and 5 months being their respective lives. Mill 20 uses brass cloth for all sizes, steel plate and cloth having both been discarded in favor of this. The life is much longer, owing to acid water, and the freight is less, owing to the lightness of the cloth.

The W. S. Tyler Co. recommend phosphor bronze cloth as being more durable than copper or brass for use with acid water, etc. Harrington & King recommend manganese bronze for plate screens.

§ 275. ATTACHMENT OF SCREENS.—The screen plate or cloth is attached to the *T* ends or bent ends of the spider arms in a variety of ways. In 33 trommels wrought iron tires are riveted to the *T* ends, and the plate or cloth wrapped around these tires and held by tightening hoops, to the ends of which lugs are riveted for the insertion of draw bolts; and in 11 others this same method is used without the inside tires. Fig. 222 shows the latter method. The lugs and draw bolts are shown in Fig. 223. In 7 trommels the tires are riveted or bolted to the *T* ends, and the screens are bolted to these tires, in addition to having the outside tightening hoops; while in 7 other cases they are

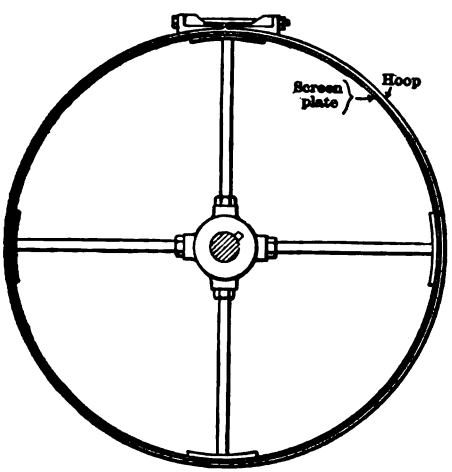

FIG. 222.—ATTACHMENT OF TROMMEL SCREEN.

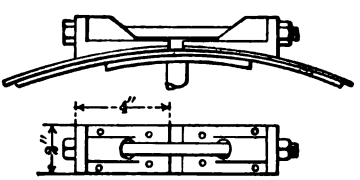

FIG. 223.—DETAIL OF A HOOP TIGHTENER FOR A TROMMEL.

riveted to the tires and do not have the tightening hoops. In 12 trommels the screen is bolted directly to the *T* ends, and also has the tightening hoops; while in 5 others it is bolted to the *T* ends without the tightening hoops; and in 5 cases the tire is put on outside the screen and the two are riveted together to the *T* ends. Six trommels in one mill (Mill 27) have the ends of the spider arms swaged down to a smaller diameter, making little shoulders upon which the inside tires rest, and the screen plates are bolted to these tires. Another method is to have heavy spider arms, to which the screen is attached by large square-headed screws, which enter the arms radially. Finally, 3 trommels carry wrought iron frames in quadrants, into which the screen plates are bolted.

In Mill 24, No. 2 trommel has four supporting rods running lengthwise from the tire of the first spider to that of the last. They are riveted by *T* ends to the end tires midway between the spokes and are bolted to the intermediate tires. They modify screening by lifting the bank of ore and allowing it to fall again. They also add something to the stiffness of the trommel.

The inside tires and even the *T* ends bolted direct to the screen plate, although

they seem to be much favored, are, in the opinion of the author, very harmful in several ways. They cause a heaping up of the ore just above the tire, which hinders good screening, increases wear of the screen plate, increases the constant load of the trommel and therefore the power to drive it, increases the abrasion of the particles and the formation of slimes. If it were not for the clumsiness of the method by gudgeon and friction rollers, its ability to obviate the above difficulty by the omission of spiders and inside tires, would be a strong argument for its adoption.

In Mill 84, No. 1 trommel has holes 6×8 inches in the last foot of its length, through which the oversize is discharged and the wear on the last spider saved.

For large trommels Fraser & Chalmers use channel irons on the ends of the spider arms. These channels are placed parallel to the shaft, with flanges turned inward, and with perforations for the arms of the spiders. They are held in place by two nuts, one outside and one inside, and furnish bases to which segments of screen cloth can be bolted edge to edge.

Screens are generally put on with lap joints, except in the case of very thick plates, and then butt joints are used, with or without fish plates. In Mill 40 the first trommel has 4 punched steel plates, ½ inch thick, 2 lengthwise and 2 to the circumference. They are put on with butt joints, and where the four corners join they are united by inside and outside fish plates, 16 inches long, 3 inches wide and ½ inch thick, each fastened by eight ½-inch bolts. The ends are also attached with fish plates. The spider arms have *T* ends, which are attached to the screen by two bolts each. For screen plates that are sufficiently flexible, one segment of plate is used to the circle.

Wear of Screens—The plates of many trommels are regulated according to wear: the first half wears out faster than the second half, and a party worn second half may be put with a new first half, thus getting a little more wear out of the screen. In No. 3 trommel of Mill 27 the plan was tried of having a first plate 41 inches long, followed by a second 32 inches long with the idea that when the first plate was worn out at its receiving end it could be trimmed and used as a second plate, but the first plate was found to wear at its receiving end by the blow and at the lower end by interference due to the spider and inside tire, and so the scheme was abandoned.

A short length of unperforated plate, called a "dead plate," is frequently placed at the upper end of the trommel to receive the excessive wear due to the fall of the ore into the trommel.

To patch broken screens, Mill 22 uses short, diagonal binders, one inside and one outside, connected by bolts at the ends.

§ 276. Driving Mechanism.—The following summary from Table 186 shows the different methods of driving trommels, and the number of instances of the different methods in the mills visited: 29 trommels are driven by pulley and belt at the lower end, 1 by pulley and belt at the upper end, 29 by beveled gears at the lower end, 12 by gears with idler from the trommel below, 11 by gears with idler from the trommel above, 17 by chain and sprocket at the lower end from a counter shaft, 2 by chain and sprocket at the upper end from a counter shaft, 4 by chain and sprocket from the trommel below, 2 by chain and sprocket from the trommel above, and 1 is directly connected to a log washer shaft. This list shows that driving with beveled gears and driving with direct pulley are about equally common. The use of beveled gears has the advantage of belting to a horizontal shaft, and is probably cheaper in the end than the complications arising from sloping counter shafts and direct pulleys. A number of trommels, also, are driven by sprocket chains. At Mill 27 half of all the stops were caused by the sprocket and chain drive of the trommels getting out of order, but this may have been due to weak chains or

sprockets. At a number of cement mills in Pennsylvania the sprocket drive is very successfully used and gives no trouble.

Three trommels in a row may be driven at the lower end of the middle one, the other two connected to it by gears and idler, or they may be driven individually. Individual trommels are a little more independent and therefore easier to repair and handle, and their first cost is about the same as where the gears and idler are used. This arrangement would seem to be preferable to connecting trommels together.

The second trommel in Mill 20 has two beveled gears on the driving shafts, one on each side of the driven gear, and either of these can be thrown into gear, thus enabling the mill man to revolve the trommel in either direction. This device sends the oversize to one or other end of the rolls which crush it, distributing the wear.

Rope driving does not seem to have found its way into the mills for trommels, but it appears to have peculiar advantages for connecting shafts that are irregularly placed with reference to each other, and for the rough work of milling. Fig. 219 shows an application.

POWER.—No. 1 trommel in Mill 26 requires 1½ horse power, but the trommel has a heavy half-inch steel screen and is 96 inches long, 36 inches in diameter, so that the power required is considerably above normal. At Przibram, Bohemia, dynamometer tests[13] showed that three conical trommels 31½ inches in diameter at the small end, 39½ inches at the large end, and 50 inches long, driven independently by spur gears from a single shaft, and running at 30 revolutions a minute, required 2.658 horse power. Fraser & Chalmers estimate power as follows for trommels 36 inches in diameter and 72 inches long: 1 horse power for a single trommel, 1½ horse power for either 2 or 3 trommels, 2 horse power for either 4 or 5 trommels, and 2½ horse power for 6 trommels, to which 15% should be added for friction of shafts, slip of belts, etc. This shows that the power is not considered to increase proportionally with the number of trommels. The power to drive 30- and 36-inch trommels, 72 inches long, run at 20 revolutions a minute, screening 150 tons in 24 hours, is computed to be as follows:

Slope.	30-inch Trommel.	36-inch Trommel.
Degrees.	Horse Power.	Horse Power.
2	0.488	0.520
5	0.208	0.228
14	0.089	0.104

In these computations it is assumed that the trommels weigh 550 and 700 pounds, and have shafts 2½ and 3 inches in diameter respectively. The coefficient of journal friction is taken at $\frac{1}{10}$, and the other necessary data are taken from Tables 202, 203*a*, and 205. The figures given include the power necessary to overcome the friction of the journals and the friction of the ore on the screen, but not the friction of the driving gear. The friction of common cast gears, the friction of the bearings due to thrust, etc., would probably bring the figures for the gentlest slope up to that found at Przibram and those used by Fraser & Chalmers.

The above figures show that the increase in power is not at all proportional to the increase in diameter: a 36-inch trommel requires but slightly more power than a 30-inch trommel; and when its increased capacity is considered, it will be found that the power per ton of ore screened is less in a 36-inch trommel than in a 30-inch trommel; that is to say, the power per ton diminishes as the trommel increases in diameter.

§ 277. FEEDING.—A steady feed of ore to a trommel is essential to good work. If the trommel is overdriven at times, it will surely carry into the oversize a

larger proportion of the undersize than is allowable. The Tullock or some similar form of feeder is suitable, or the trommel may be fed by the undersize of a previous trommel, or by any steady machine. Mills 20, 27 and 28 use automatic feeders before the first trommel. The last has one also for re-ground middlings. The usual practice in the mills appears to be to trust to the breaker or rolls for regulation.

At the upper end of the trommel there is commonly a receiving or feed cone, which projects 4 to 8 inches beyond the upper spider so that the feed spout can enter without interfering with the spider. On account of the gentle slope of the trommel, this cone is inclined 15° to 50° to the axis, to prevent the possibility of the ore being thrown out. The details for some of the trommels are given in Table 189.

TABLE 189.—RECEIVING CONES FOR TROMMELS.

Mill No.	Length of Cone on the Slope.	Small and Large Diameter of Cone.	Inclination of Side of Cone to the Axis.	
	Inches.	Inches.	Deg.	Min.
5	6	35 and 42	35	40
15	8.5	29 and 31	6	45
23	7	28 and 36	34	50
24	7.8	29 and 36	26	40
25	7.2	28 and 36	38	40
26	8.5	24 and 36	44	55
27	6.5	30½ and 35	23	20
	4.3	31½ and 34½	20	30
35	7.2	28 and 36	33	40
37	5.5	40 and 48	46	40
41	6	33 and 36	14	30

WASH WATER IN THE TROMMEL.—This is generally fed upon the outside of the up-coming side of the trommel by a spray pipe. In Mill 88 the water comes from an overflowing trough. An internal spray pipe can be used in the trommel shown in Fig. 220. Sometimes the shaft is made hollow and holes bored in it give a spray of water applied inside. The object of the water is to hasten sifting by washing the fine stuff quickly through the holes. It also prevents blinding up of the holes and lays the dust. Water *must* be used on damp or wet ore. If the ore is previously dried, screening can be done without water, but in this case the trommels must be completely housed in and provided with suction from a fan, to avoid the otherwise intolerable dust that would be made. A disadvantage of water lies in the fact that wet or even moist ore wears out screens much more rapidly than dry ore; it also dilutes the pulp and so leads to loss in slimes. It is not uncommon to omit the use of water on the earlier, larger trommels (for practice see Table 190). In 7 mills out of 23, dry screening precedes wet; in the other 16 water is fed to the first trommel. Among the former, water is nowhere fed to a screen coarser than 9.5 mm.; but among the latter it is fed to screens as coarse as 54 mm.

TABLE 190.—THE USE OF WATER IN TROMMELS.

Mill No.	Sizes of Holes in Trommels Run Dry. Mm.	Sizes of Holes in Trommels Run Wet. Mm.	Mill No.	Sizes of Holes in Trommels Run Dry. Mm.	Sizes of Holes in Trommels Run Wet. Mm.
10	None	12.7	26	31.8	5.7, 3.6, 2.1, 1.5, 0.9
15	None	12.4, 4.7, 2.3	27	None	38.1, 25.4, 15.9, 12.7, 10.3, 8.3, 4.4, 2.8, 2
16	None	20, 10, 5, 2			
17	15, 10	7, 5, 3.5, 2	28	None	40, 25, 16, 12, 8, 5, 3.5, 2
18	3.6	2.1, 1.5, 1.3	30	None	25, 15, 10, 7, 5, 3, 2.5
19	3 mesh	5 mesh, 8 mesh, 10 mesh	31	None	18, 15, 9, 6, 4, 2.5
20	None	6.4, 3.6, 2.7, 1.5	38	None	38.1, 22.2, 9.5, 5, 2.5
21	None	4.6, 3.5, 1.2	39	None	54, 38.1, 15, 8.5, 4.5
22	None	12, 6, 3	41	15.9	9.5, 6.4, 3.2
23	None	7, 5, 3	43	None	11.1, 3, 2
24	None	10, 7, 5, 3	87	2 mesh, 3 mesh, 4 mesh	6 mesh, 8 mesh, 12 mesh
25	6	None	88	None	3 mesh, 6 mesh, 10 mesh

§ 278. THE DUTY OR CAPACITY of a trommel is the quantity of ore that it can screen satisfactorily in a given time. It depends upon the slope, the diameter, the speed of revolution, and the length of the trommel. Table 191 shows the actual quantities handled in some of the mills.

TABLE 191.—DUTIES OF TROMMELS IN THE MILLS.

Mill Number.	Trommel Number.	Tons Screened per 24 Hours.	Slope.		Diameter.	Revolutions per Minute.	Length.	Diameter of Holes.
			Deg.	Min.	Inches.		Inches.	Mm.
10	1	384 to 432	4	45	36	20	84	12.7
15	1	90	.....		31-43	21	78	12.4
21	1	65 to 75	4	45	30	25	36	4.6
21	2	40 to 50	4	45	30	25	60	3.5
22	1	175	3	0	36	17	96	12
23	1	(a) 100	3	35	36	.....	108	7
24	1A	109	1	50	36	18	34	10
25	1	(a) 90	3	55	36	26	108	6
26	1	200	7	5	36	25	96	31.8
26	2	(a) 100	4	45	30	18	60	5.7
28	1	240	3	10	34	17	120	16, 25, 40
28	1	(a) 175	9	30	.....	30	60	8
29	2	(a) 175	9	30	.....	30	60	6
29	3	175	9	30	.....	30	60	4
30	1	(a) 260	3	0	48	15	90	10, 15, 25
32	1	250	7	10	36	17	120	8, 12
33	1	75	.....		36	17	129	7.9, 12.7
34	1	150	9	30	40	16	60	15
35	1	250 to 300	5	20	36	24	48	16
36	1	150	9	30	36	12	48	38.1
36	2	150	5	55	36	20	72	22.2
39	1	250	4	45	30	10	80	38.1, 54
84	1	(b) 175	4	45	36	20	96	25.4
87	Sampler.	125	2	0	36	.....	72	2 mesh.
88	1	75	2	0	32	25	60	3 mesh.

(a) Plus returns from rolls. (b) 200 tons could easily be screened.

The adjustments that affect capacity are discussed in § 292 and § 293, Chapter X. Tests are given in § 293, showing the quality of screening in a few of the mill trommels.

The following figures show approximately the quantities of ore delivered per hour by the No. 3 and following trommels in Mill 26, the ore all having previously passed through 5.7-mm. square holes: Over 3.6 mm., 2,500 pounds; over 2.1 mm., 1,250-1,667 pounds; over 1.5 mm., 1,000-1,250 pounds; over 0.9 mm., 833-1,000 pounds; through 0.9 mm., 2,750-1,917 pounds; total, 8,333 pounds. The two following examples are taken from Linkenbach,[8] the material treated consisting of galena, blende, spathic iron, quartz, graywacke and slate. The trommels are all conical. In the first set, each trommel was 54 inches long, and the small and large diameters respectively 31.5 inches and 38 inches; and each makes 15 revolutions a minute. The ore treated had already passed through 30-mm. holes. The screen plates were of wrought iron.

Diameter of Holes.	Life of Plate.	Oversize per Hour.
Mm.	Days.	Pounds
20	400	2,314
12	450	1,984
8	500	1,488
5	470	1,157
3	370	992
2	350	247
1½	340	165
Through 1½	.....	1,571
Total	.....	9,918

In the second set, each trommel makes 15 revolutions a minute. The size of the feed is not stated.

Small Diameter.	Large Diameter.	Length.	Diameter of Hole.	Material of Plate.	Life of Plate.	Oversize per Hour.
Inches.	Inches.	Inches.	Mm.		Days.	Pounds.
43.0	51	77.0	8	Iron.	350	3,747
31.5	38	53.5	5	Iron.	320	1,499
31.5	38	53.5	3	Iron.	300	1,256
31.5	38	53.5	2	Steel.	280	992
31.5	38	53.5	1	Steel.	250	771
.....	.....	.....	Through 1 mm.	.....	.....	2,196
Total	.....	.....	.....	.....	.....	11,461

In this second set, the finer screens are worked much harder than in the first.

The two following examples are given by Blömeke.[21] The first is a series of cylindrical trommels, the second a series of conical, concentric trommels. The material screened had already been through a grizzly with 60-mm. spaces.

Diameter.	Length.	Slope.	Diameter of Holes.	Oversize per Hour.
Inches.	Inches.	Degrees.	Mm.	Pounds.
21	79	6	30	1,080
21	59	4	20	495
21	59	4	13	435
21	59	4	8	413
21	59	4	5	309
21	59	4	3	187
21	59	2	2	198
21	59	2	1	188
21	59	2	0.5	58
.....	.....	.....	Through 0.5 mm	447
Total	.....	.....	.....	3,745

All of the trommels in this first set were run at 18 revolutions a minute. The total amount of water used for the set was 375 liters a minute.

Diameter.	Length.	Diameter of Holes.	Oversize per Hour.
Inches.	Inches.	Mm.	Pounds.
		30	3,306
		20	1,653
Inner cone.. 20–28	79	13	992
		8	771
Outer cone.. 28–33	43	5	661
		3	330
		2	220
		1	441
.....	.....	Through 1 mm.	441
Total	.....	.....	8,815

The total amount of water used for this second set was 400 liters a minute.

§ 279. Cost of Screening.—The cost of screen plate or cloth per ton of ore milled, in fractions of a cent is given in Table 192. The ore in every case is wet, or at least moist.

TABLE 192.—COST OF TROMMEL SCREENS.

Mill No.	PLATE. Cost of Screen Plates in Fractions of a Cent per Ton of Ore Milled. Individual Trommels.	Whole Mill.	Mill No.	WIRE CLOTH. Cost of Screen Cloth in Fractions of a Cent per Ton of Ore Milled. Individual Trommels.	Whole Mill.
10	0.320 to 0.384	0.320 to 0.384	20	0.182 to 0.304 0.073 to 0.101 ..... 0.085 to 0.176 0.085 to 0.176	
22	0.166 0.279 0.256	0.701	21	0.101 to 0.196 0.449 to 0.561 0.561 to 0.701	1.111 to 1.388 (c)
24	0.092 0.128 0.367 (a) 0.169 0.061		26	(d) 0.131 to 0.157 0.118 to 0.147 0.118 to 0.147 0.118 to 0.147 0.214 to 0.268	0.699 to 0.866 (e)
35	0.088 to 0.043 0.088 to 0.043 0.054 to 0.064 0.071 to 0.086 0.088 to 0.043	0.239 to 0.279			
40	0.203 to 0.231 0.147 to 0.161 0.181 to 0.197 0.163 to 0.189 0.195 to 0.213	0.889 to 0.974 (b)			

(a) Includes the cost of putting on. (b) Copper sulphate water. (c) Probably acid water. (d) First trommel not worn out. (e) Probably high freight charges.

At the Lehigh Zinc & Iron Co.'s mill, for sizing franklinite ore dry, through 10-, 15-, 20-, 30- and 50-mesh cloth screens, the cost of the trommel screens from July, 1895, to January, 1896, was $303.93, screening in that time 6,982 tons of ore, making the expense per ton 4.35 cents.* This high figure is probably due to the fact that very fine screens are used and a number of them.

At Mill 26, No. 2 trommel, 5 feet long, 30 inches in diameter, with $2\frac{7}{16}$ inch shaft and with 3 spiders, treating 100 tons of quartz per day, wears out its shaft and spiders completely in one year. Estimating the cost of a trommel at $85, screening 100 tons a day for 350 days, the cost per ton would be 0.243 cent. If changing screen plates takes 3 men half a day, at $3 per day, it would cost $4.50, and if the screens last 40 days and treat 100 tons per day, the cost for this would be 0.113 cent per ton. The annual labor cost for putting in a new trommel would be about the same, and would take the place of the 40-day change on that occasion. Suppose screen cloth costs $5.50 and lasts 40 days, this would give a cost of 0.131 cent per ton. Attendance might be $\frac{1}{10}$ of a man at $2.50 by day and $2.50 by night, equal to 0.5 cent per ton; lubricating, 0.02 cent per ton; 1 horse power at 13 cents per 24 hour day would be 0.13 cent per ton for power. Summing up, we get some idea of what the cost of screening by a trommel might be:

First cost of trommel	0.243	cent per ton.
The labor of changing	0.113	" "
The screen cloth	0.131	" "
The power	0.130	" "
Lubrication	0.020	" "
Attendance	0.500	" "
Total	1.137	cents "

If a mill has a number of trommels, the computation should be made for each trommel and the sum of their costs will be the total screening cost.

§ 280. CONES, PYRAMIDS, PRISMS.—These forms have met but little favor in this country (see § 271). The advantage claimed for the cones and pyramids is that the horizontal shaft simplifies the mechanism, allowing of direct belt and pulley connection with the shaft of the trommel. The angle of the cone or pyramid becomes the angle of the slope of the screen. On the other hand, both cone and pyramid have the disadvantage that they require special shapes

* Letter from J. Price Wetherill.

of plates, which are more expensive to make and fit than the simple rectangular forms used upon the cylinders. They also have the disadvantage that the greater work of screening is put upon the small end of the trommel where the screen surface is smallest and therefore least able to sustain the wear, and where the curvature is greatest, making the bank deeper and less manageable. They have the further disadvantage that the whole condition of screening is changing from the beginning to end of the trommel: if the revolution be made to suit either the small or large end the other end will be working at a disadvantage, because the centrifugal force increases from the small end to the large end. The spiders, and the methods of attaching the screens to them, are the same as in the cylinders, except that the length of the arms is made to suit the taper of the cone.

The prisms and pyramids are made octagonal, hexagonal or square, the edges being formed by permanent frames and the planes being filled by screen cloth or plate. Mill 89 has one prism and Mill 90 has one pyramid. It would seem that whatever advantage is gained by the shock which the ore bank gives when it strikes a plane, in hastening sifting and in unblinding the screen, is probably more than offset by the extra wear which the first half of the plane is called upon to bear, and by the small amount of screening done by the last half of the plane.

§ 281. Tandem and Concentric Trommels have screens of two or more sizes on the same shaft: in tandem trommels two or more screens form one continuous, cylindrical or conical surface; in concentric trommels two or more screens are placed one outside of the other. In tandem trommels the first or upper screen is always the finest and the others follow in order of size; in concentric trommels the inner screen is always the coarsest and the others follow in order of sizes. The object of both of these devices is to save mill fall or height and to gain compactness of plant, but both of these advantages are obtained at the expense of simplicity. The tandem form can use only two screens, or at most three, because the first screen, which receives the most wear, is the finest, and is therefore least able to stand rough usage. The concentric trommel becomes greatly complicated if a number of screens is used; and the fine screen, which is apt to be high cost cloth, has to be made very large and is therefore very expensive. On this account two screens appear to be the maximum number of concentric screens attempted on one trommel.

The practice in regard to tandem trommels is shown in Tables 186, 187 and 188, that in regard to concentric trommels in Table 193. Of the 162 trommels in Table 188, 22 have tandem screens. Table 193 shows 2 trommels (Mills 11 and 13), with concentric screens, and 3 (Mills 4 and 31), with tandem and concentric combined.

TABLE 193.—CONCENTRIC TROMMELS.

			First Part.				Second Part.						
Mill No.	Trommel No.	Screen.	Length of Cylinder.	Diameter of Cylinder.	Holes.	Life in days of 24 Hours.	Length.	Diameter.	Hole.	Life in days of 24 Hours.	Slope.	Revolutions per Minute.	Screen Material.
			In.	In.			In.	In.					
4	1	Inner	24	30	1-inch mesh	....	30	30	½-in. mesh.	....	.....	18	Cloth.
		Outer	18	36	16-mesh	....	....	....	.....	....			
11	1	Inner	....	....	25.4 mm	....	....	....	.....	....	.....	....	.....
		Outer	....	....	1 mm. punched hole	....	....	....	.....	....	.....	....	.....
13	1	Inner	78	24	12.7 mm. square hole	96	....	....	.....	....	12°10′	30	Steel wire cloth.
		Outer	72	40	6.4 mm. square hole	96	....	....	.....	....			
31	1	Inner	32	32	9 mm	28	32	32	18 mm.	56	3°35′	21	Punched steel plate
		Outer	....	....	.....	....	32	36	15 mm.	42			
	2	Inner	32	32	4 mm	56	32	32	6 mm.	56	3°35′	21	Punched steel plate
		Outer	....	....	.....	....	32	36	4 mm.	56			

The outer screen in Mill 4 is put on only at the upper end of the trommel. Those of Mill 31 are put on only at the lower ends of the trommels. In Mill 13 the lower end of the inner screen extends 6 inches beyond the outer screen.

§ 282. THE SCHMIDT SPIRAL SCREEN consists of a continuous wound-up ribbon of dead plates and of wire cloths, having a definite space between successive turns of the coil (see Fig. 224). The plan is to place the coarsest cloth inside, the finest outside, and the other sizes in series between the two. At the end of each size of cloth is placed a cross dam at a slight angle, which forces the oversize to report at one side of the screen or one end of the drum, where

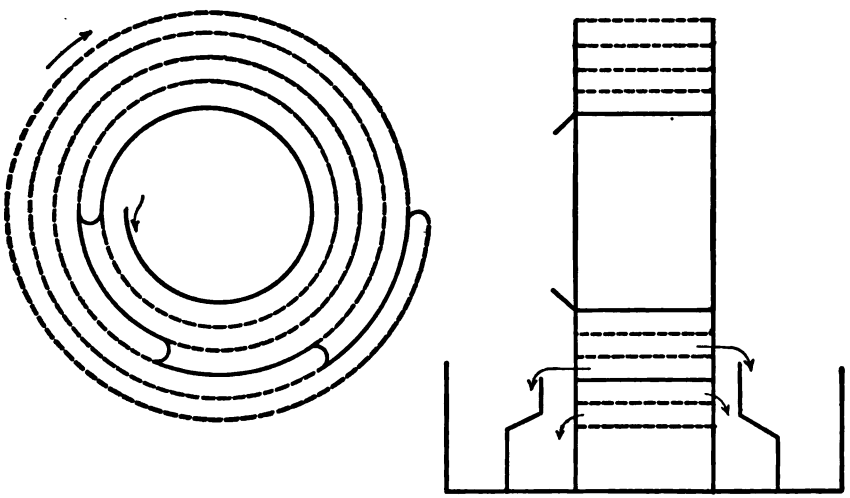

FIG. 224.—SCHMIDT SPIRAL SCREEN.

a spout is placed to discharge it, each discharge being a little more than one revolution in advance of the preceding. At the end of each size of cloth, just beyond the discharge and before the next size begins, is a short dead plate. These little dead plates are put in the series to prevent the undersize from a screen above from mixing with any given oversize just as it is discharging. The advantages claimed for the spiral screen, in addition to its compactness, are that it uses less water and power, and requires less fall than other forms, and has a horizontal shaft. The disdvantage is that it is much more troublesome to repair and more difficult to inspect.

Linkenbach[8] gives the following example of a spiral screen with sieves 600 mm. wide, making 8 revolutions a minute, screening 3,000 kilos (6,612 pounds) of ore per hour, using ½ horse power and 30 liters of water per minute. The feed comes from a wash trommel through a 23-mm. hole:

Size of Holes.	Perforated area, 360° each.	Dead Plates.	Diameter of Screens.
Mm.	Sq. M.	Sq. M.	Mm.
15	2.00	0.00	1,060
10	2.10	0.20	1,220
7	2.34	0.26	1,380
4.5	2.57	0.29	1,520
3	2.81	0.32	1,660
2	3.06	0.36	1,800
1.5	3.65	0.00	1,940

This screen has found some favor on the continent of Europe, but its intro-

duction has not increased as rapidly as the trommel. At Freiberg, in 1883, there were 3 spiral screens and 15 flat, shaking screens; while in 1893 there were 3 spiral screens, 34 trommels, and 3 flat shaking screens.[34]

§ 283. SYSTEMS OF SCREENING BY TROMMELS.—The system which meets by far the most favor in this country consists in the use of cylindrical trommels with only one size of hole to each trommel, the set being arranged in a series beginning with the coarsest and ending with the finest size. This is the best system, because it proportions the wear to the ability of the screens to withstand wear—the coarsest has the hardest usage and the finest the mildest. It also makes a more perfect separation of the coarse from the fine ore, and very much lessens the production of slimes. Abroad, the series has sometimes been divided by the following means: The ore first goes to a screen with medium-sized holes; the oversize of this to a series of coarse screens, the undersize to a series of fine screens. This system saves some fall, but it causes excessive wear on the receiving screen, beside complicating the arrangement. The different systems of arranging trommels may be classified as follows:

(*A*) Trommels without special devices to diminish fall. A single size of hole for each trommel, the coarsest first.

(*a*) The straight line system, in which one trommel follows another, with their axes generally in one vertical plane (see Fig. 218).

(*b*) The side by side system, in which the direction of the ore's movement is reversed for each trommel (see Fig. 225). This system is more compact, but uses a little more height and is not as simple as the preceding.

(*B*) Trommels with special devices for minimum fall.

(*1*) Beginning with finest holes. Two or three different sizes of holes in a single cylinder or cone.

(*2*) Beginning with medium-sized holes. One trommel, with say 9-mm. holes, sends oversize to a second trommel with two or three sizes of coarser holes, and undersize to a third trommel with two or three sizes of finer holes (see Fig. 226).

(*3*) Beginning with coarsest holes.

(*a*) A concentric trommel (either cylinder or cone) with two or three screens.

(*b*) The Neuerburg system uses as many as three successive conical trommels on one horizontal shaft, with little sand wheels to lift undersize of first to second, and of second to third (see Fig. 227).

(*c*) The Heberli system uses as many as four conical trommels on a single inclined shaft, the ore moving from the large to the small end of the cone (see Fig. 228).

(*d*) The Schmidt spiral screen has successive sizes in a continuous spiral on a single shaft.

Comparing trommels in straight line with trommels side by side: the former require somewhat less fall; the latter arrangement is more compact, but it is less accessible for inspection and repairs, and the compactness is often uncalled for. The loss of height from passing through the trommel is much less with the spiral than with the cylinder or ordinary cone, as it omits the conveying launders with their necessary grades. The Neuerburg design of conical trommel overcomes this loss of height by introducing little elevating sand wheels, and also simplifies the driving mechanism for a set of trommels; but to offset these advantages, it seriously complicates inspection and the replacing of worn out screen plates.

§ 284. COMPARISON OF TROMMELS AND RIDDLES.—Owing to the fact that

a riddle uses the whole of the surface at all times, while a trommel uses only a narrow strip, the former will have a much larger capacity than the latter if the slopes are such that the ore banks are kept thin; but as a rule they require greater slope. In regard to quality, the shaking action of the riddle causes it to do a high grade of screening, provided it has sufficient slope to have a thin ore bank; but the long path of the particles in the trommel, if the slope of the latter is not too gentle, brings up its quality to nearly that of the riddle, except on the finer sizes. In regard to power, the authorities agree that the riddles take more than the trommels. The trommels run more quietly than the riddles, as they give no jar or shake. In regard to wear, repairs, and frequency of stops for repairs, the authorities hold that the advantage is largely with the trommels. In regard to slime making, most authorities hold that the wear of the trommel makes less slimes than the shock of the riddle. In regard to sim-

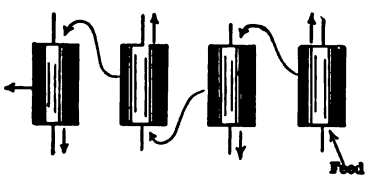

FIG. 225.—PLAN.

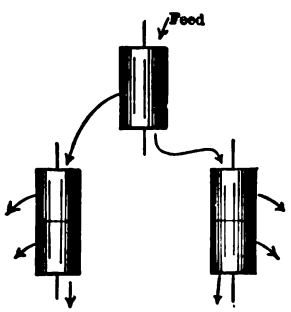

FIG. 226.—PLAN.

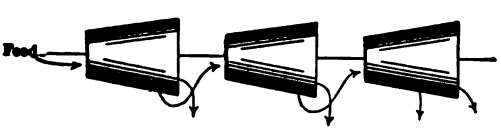

FIG. 227.—SIDE ELEVATION.

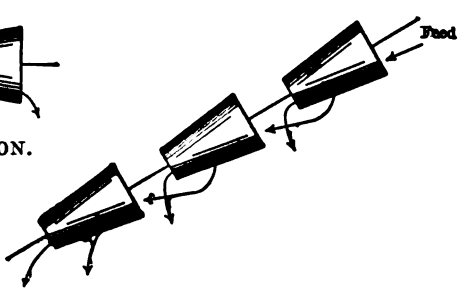

FIG. 228.—SIDE ELEVATION.

plicity, the mounting of the screen is simplest in the riddle, while the power connections are simplest in the trommel.

To sum up the practice by the number of machines used: 167 positions, in the mills visited by the author, use trommels, and 3 use riddles. The opinion of foreign mill men appears to confirm that of American, for we find that in the Freiberg district, from 1883 to 1893, the number of riddles was reduced from fifteen to three, while in the same period the number of trommels was increased from none to thirty-four.[34] For coal screening, however, riddles are considerably used, and do excellent work. They are also considerably used in leaching plants and other places where the entire product is ground very fine.

BIBLIOGRAPHY FOR SIZING SCREENS.

This will be found at the end of Chapter X.

CHAPTER X.

PRINCIPLES OF SCREEN SIZING.

Under this heading will be discussed the various considerations that affect the number of sizes into which an ore should be screened, and that affect the quality of the sized product.

§ 285. SIEVE SCALE.—The list of successive screen sizes used in any mill, taken in order from coarsest to finest, is called the *sieve scale*. Rittinger held that in such a set the diameter of the holes in any screen must bear some constant ratio to that of the one above it, thereby making the sieve scale a geometrical series. He adopted 1.414 ($=\sqrt{2}$) for this ratio; and his sieve scale starts with 1-mm. hole, and ranges up and down from that point. It is given in Table 194. For convenience in designating different classes of machines treating different sizes of ore, he divided the sizes smaller than 64 mm. into five classes: lump ore (*stufen*), 64-16 mm. ($2\frac{1}{2}$-$\frac{5}{8}$ inch); coarse jigging ore (*graupen*), 16-4 mm. ($\frac{5}{8}$-$\frac{5}{32}$ inch); fine jigging ore (*gries*), 4-1 mm. ($\frac{5}{32}$-0.04

TABLE 194.—RITTINGER'S SIEVE SCALE.

Diameters.	Areas, if Holes are Square.	Volumes, if Particles are Cubes.	Diameters.	Areas, if Holes are Square.	Volumes, if Particles are Cubes.
Mm.	Sq. Mm.	Cu. Mm.	Mm.	Sq. Mm.	Cu. Mm.
64.0	4,096	262,144	2.8	8	22.6
45.2	2,048	92,668	2.0	4	8.0
32.0	1,024	32,768	1.4	2	2.8
22.6	512	11,583	1.0	1	1.0
16.0	256	4,096	0.71	0.5	0.35
11.3	128	1,448	0.50	0.25	0.125
8.0	64	512	0.35	0.125	0.044
5.7	32	181	0.25	0.063	0.016
4.0	16	64			

TABLE 195.—SIEVE SCALES IN AMERICAN MILLS.

Mill Number.	Diameters of Holes, in Millimeters.	Mill Number.	Diameters of Holes, in Millimeters.
10	12.7.	35	16.0, 9.0, 5.0, 3.0. 2.5.
11	25.4, 1.0.	36	12.7, 7.9, 5.1, 3.3.
13	12.7, 6.4.	37	25.4, 12.7, 9.0, 6.0, 3.0. 2.5, 1.5.
15	12.4, 4.7, 2.3.	38	38.1, 22.2, 9.5, 5.0, 2.5. 2.5. 22.2, 9.5, 5.0.
16	20.0, 10.0, 5.0, 2.0.	39	54.0, 38.1, 15.0, 8.5, 4.5.
17	15.0, 10.0, 7.0, 5.0, 3.5, 2.0.	40	20.0, 7.0, 4.5, 3.0. 3.0.
18	3.6, 2.1, 1.5, 1.3.	41	15.9, 9.5, 6.4, 3.2. 3.2.
20	6.4, 3.6, 2.7, 1.5.	42	6.4. 12.7, 6.4. 6.4. 2.5.
21	4.6, 3.5, 1.2.	43	11.1. 3.0, 2.0.
22	12.0, 6.0, 3.0.	84	25.4.
23	7.0, 5.0, 3.0.	86	9.0, 6.5, 3.0, 1.25.
24	10.0, 7.0, 5.0, 3.0.	(a) 89	25.4. 2.1.
25	6.0.	(a) 92	6.4, 2.2, 1.5, 0.94, 0.81, 0.58, 0.25.
26	5.7, 3.6, 2.1, 1.5, 0.9.	93	6.0, 3.5, 2.0.
27	38.1, 25.4, 15.9, 12.7, 10.3, 8.3, 4.4, 2.8, 2.0.		
28	40.0, 25.0, 16.0, 12.0, 8.0, 5.0, 3.5, 2.0. 3.5, 2.0.		
29	8.0, 6.0, 4.0, 3.0, 2.5.		
30	25.0, 15.0, 10.0, 7.0, 5.0, 3.0. 5.0, 2.5.		
31	18.0, 15.0, 9.0, 6.0, 4.0. 2.5.		
32	12.0, 8.0, 6.0, 3.0. 5.0, 2.0.		
33	12.7, 7.9, 5.1, 3.3.		
34	15.0, 13.0, 11.0, 9.0, 7.0, 5.0, 3.0. 3.0.		

(a) These are magnetic concentrating mills, and the screening is done on dried ore.

TABLE 196.—SIEVE SCALES IN FOREIGN MILLS.

Mill.	Diameters of Holes, in Millimeters.	Mill.	Diameters of Holes, in Millimeters.
Silberau (*a*)	13.0, 8.0, 5.0, 3.0, 2.0, 1.0, 0.5.	Vaucron (*e*)	25.0, 4.0, 2.8, 2.0, 1.4, 1.0.
Lautenthal (*b*)	22.0, 13.3, 10.0, 7.5, 5.6, 4.2, 2.6, 1.6, 1.0. 6.4, 5.6, 4.2, 2.6, 1.6, 1.0. 2.0, 1.0.	Friedrichssegent (*f*)	5.5, 4.0, 2.8, 2.0, 1.4, 1.0. 50.0, 35.0, 30.0, 20.0, 12.0, 8.0, 5.0, 3.0, 2.0, 1.0.
Clausthal (*b*)	2.0, 1.0, 0.5, 0.25. 60.0, 32.0, 17.7, 13.3, 10.0, 7.5, 5.6, 4.2, 3.5, 2.0, 1.0.	Ems (*f*)	30.0, 18.0, 10.0, 5.00, 3.0, 1.5. 6.0, 4.0, 3.0, 2.0, 1.0. 4.0, 2.5, 1.0.
Schulenberg (*b*)	20.0, 15.0, 10.0, 6.4, 4.2, 2.6, 1.0.	Laurenburg (*f*)	35.0, 15.0, 3.0. 8.0, 5.0, 3.0.
Sampson mine, at St. Andreasburg (*b*)	30.0, 20.0, 12.0, 6.0, 3.0, 1.0. 10.0, 6.0, 3.0, 1.0.	Weiss (*f*)	16.0, 8.0, 5.5, 4.0, 2.75, 2.0, 1.5. 50.0, 30.0, 20, 15.0, 10.0, 6.0, 3.0, 1.5.
Ammeberg (*c*)	20.0, 13.0, 8.0, 5.0, 2.5. 6.0, 2.5, 2.0, 1.5, 1.25, 1.0. 2.5, 2.0, 1.4, 1.0. 2.0, 1.4, 1.2, 1.0.	Mechernich (*f*)	50.0, 20.0, 6.2, 5.0. 14.0, 10.0, 7.5, 3.0, 2.0.
Dornberg & Aurora Works, at Ramsbeck (*d*)	60.0, 20.0, 12.0, 9.0, 7.0, 5.5, 4.0, 3.0, 2.0, 1.0.	Himmelfahrt Mill, Freiberg (*g*)	16.0, 12.0, 9.0, 7.0, 5.5, 4.0, 3.0, 2.0.
		Bleyberg (*a*)	35.0, 28.0, 25.0, 22.0, 20.0, 18.0, 15.0, 12.0, 10.0, 8.0, 7.0, 6.0, 5.0, 4.0, 3.0, 2.0.

(*a*) *Am. Inst. Min. Eng.*, Vol. XXIV., (1894). p. 227. (*b*) *Berg. u. Hüttenwesen des Oberharzes*, (Stuttgart, 1895), p. 222 and following. (*c*) *Am. Inst. Min. Eng.*, Vol. XXIV., (1894), p. 422. (*d*) *Berg. u. Hütt Zeit.*, Vol. LIII., (1894), p. 167. (*e*) *Bull. Soc. Ind. Min.*, Series III., Vol. VIII., (1894), p. 527. (*f*) *Ann. des Mines*, Series VIII., Vol. XX., (1891), p. 101 and following. (*g*) *Berg. u. Hütt. Zeit.*, Vol. L., (1891), p. 229.

inch); coarse table ore (*mehl*), 1-0.25 mm. (0.04-0.01 inch); and fine table ore (*staub*), finer than 0.25 mm.

The sieve scales found by the author in the mills are given in Table 195. There is but one mill (22) that has a constant ratio or geometrical series. There are several others (16, 17, 33 and 36) that approximate to geometrical series. Mills 23 and 34 have arithmetical series. The practice in regard to sieve scales in some of the European mills has been collected from the literature and is given in Table 196, for comparison. Of these mills, Lautenthal has one set of screens with a constant ratio of 2. Vaucron, if we omit the 25-mm. screen, has two sets with the ratio of 1.41. At Clausthal, in a set of eleven screens the ratio of 1.33 occurs five times in succession. In the other mills the ratios are irregular. It will be seen therefore, that neither in America nor in Europe do constant ratios find favor as a rule.

Single or Multiple Ratio?—There are many reasons why a single ratio running through the whole sieve scale may not be advisable. The scale may be divided, having an upper portion with one ratio, a lower with another. Practically, the sieve scale is developed by the exigencies of the mill, the ratio increased or decreased between any two screens where the particular work seems to demand it. This change can be easily made when a screen wears out and is changed. The ratio to be adopted depends mainly upon the specific gravities of the grains—in a general way the greater the difference in specific gravity between the *values* and the *waste* the greater may be the ratio between the diameters of holes in successive screens. This is true because the ease of the subsequent separation increases with the difference in specific gravity. Certain other considerations, however, modify the ratio, as follows:

(*a*) The difficulty of the subsequent separation increases with the difference in the sizes of grains treated together, that is to say, with an increased ratio. (*b*) A product which consists mainly of cubes or compact forms, can have a larger ratio than one which has a large per cent. of flat scales and elongated grains mixed with compact forms. (*c*) If the minerals are near each other in specific gravity or if the ore breaks so as to give a considerable proportion of included grains, with intermediate specific gravity, then close sizing (that is, a small ratio) will generally give cleaner products on the jigs following; but if the minerals are in a coarsely crystallized condition, tending to make but little in the way of included grains, a larger ratio may be used than if the

crystals are fine. (*d*) Where such a large quantity of material comes on to any screen as to require an increase of the number of screens treating that size, and more than one concentrating machine to treat the product, it may be better to diminish the ratio, using two successive screens with different sizes of holes, rather than to use two screens side by side with the same size of hole. The advantage of a closer sizing will thus be obtained. There may also be cases where it will be perfectly safe to increase the ratio in order to get the desired quantity of ore for some following machine. The arithmetical series in Mill 34 was found to send too much material to some of the jigs, and too little to others; the ratio was therefore changed two or three times to correct this difficulty, but the author does not know what scale was finally adopted.* (*e*) The increase in slimes and mineral loss, due to too much screening, may be more harmful than the imperfect work due to too large a ratio. This would point to the use of a large ratio. Mill 27 has been troubled by the sliming due to the large number of screens used, and the superintendent expects to make a large saving by reducing the number of screen-sized products from eight to three or five. (*f*) The portion of the sieve scale devoted to hand picking generally has a large ratio; but it is not well to have this ratio too large, for the eye and mind cannot deal as well with 1-inch pieces and 3-inch pieces together as with either taken separately. (*g*) If the ore is so friable and tender as to require careful, graded crushing, the upper part of the sieve scale will need a smaller ratio than if such graded crushing is not necessary. (*h*) The tailings from the coarse jigs may be so rich that it is necessary to re-crush and re-wash them, in which case the ratio of sizes fed to these coarse jigs may be large, because the quality of the tailings does not require close attention; while, on the other hand, the tailings from the fine jigs, being waste, will require closer attention, and therefore a smaller ratio may be advisable.

To sum up the matter, it seems clear that there are four regions of the sieve scale, each one of which, from considerations of its own, may need a greater or less ratio between its screens. They are: (1) The hand picking region; (2) The graded crushing region; (3) The coarse jigging region; (4) The fine jigging region. The second may cover the same ground as a part or the whole of the first and third regions.

§ 286. THE LIMITS OF THE SIEVE SCALE.—The size of hole used in the coarsest trommel will be determined by considerations of graded crushing and of hand picking. The size of hole in the finest trommel, down to which screening shall take place, and beyond which the preliminary separation shall be made by hydraulic classifier, will be decided by three main considerations: (1) The hydraulic classifier can be run much more cheaply than the last one or two trommels; (2) On the other hand, the tailings of the jigs treating classifier products are much richer than those of jigs treating sized products; (3) The finer the screening is carried (that is, the later the hydraulic classification begins) the denser will be the fine pulp sent to slime tables, because there will be fewer hydraulic classifiers, which are great diluters of the pulp. This is a distinct advantage for slime table work. The first of these considerations is an argument against fine screening, but the other two favor it. Each mill manager must decide whether *fine screening* or *coarse classification* is better for his particular case. In this connection, it is debatable whether the more common European limit of 1- to 1.5-mm. holes for the finest screen is not better than the more common American limit of 2 to 3 mm.

The following figures show the coarsest and finest holes used in the American

* It should be noted that the proportion of ore passing through the holes of a given screen will increase as the holes are enlarged by wear. This is illustrated by some of the tests from Mill 28, given in § 292.

mills: Of 108 punched plate screens, the coarsest has 40-mm. holes, the finest, 1.25 mm.; of 4 cast-iron screens, the coarsest has 54-mm. holes, the finest, 25.4 mm.; of 43 wire cloth screens, the coarsest steel screen has 25.4-mm. holes, the finest, 0.5 mm., and the coarsest brass cloth screen has 6.4-mm holes, the finest, 0.25 mm. In Mill 21 a 24-mesh trommel has been discarded, leaving 1.2 mm. (12-mesh) as the finest screen. In Mill 18, where the finest screen has 1.3-mm. holes, two smaller sizes were tried and discarded. Linkenbach recommends 1.5 mm. as the limit of fine screening, everything finer being sent to hydraulic classifiers. Heberle practically coincides in this judgment, holding 1.4 mm. to be the limit of satisfactory screening.[6]

§ 287. Shape and Arrangement of Holes.—The practice is almost universal in this country to use round holes in punched plate, and approximately square holes in wire cloth screens. The round holes of plate screens have the advantage that they give the most even product; the square holes of cloth and long holes of plate or cloth allow greater variation in the section of the maximum grain. Cloth screens give a greater percentage of opening and, therefore, of capacity than punched plate. Thomas A. Edison points out that the trajectory of a moving particle requires a hole to be lengthened in the direction of the path of the particle in order that the grain of maximum size may pass through the hole. Holes in rows making 60° with each other ("staggered") give greater area of discharge than those with 90° (see Figs. 119 and 120). All of the punched plate screens recorded by the author are laid out on the 60° plan.

§ 288. The Percentage of Opening is the ratio of the net area of the holes to the whole area of the screening surface. It depends upon the arrangement of the holes and the amount of space left between them. It is obvious that the greater the percentage of opening, the more rapid and the more perfect will be the screening. The practical limit is reached when the strength of the screen is too much reduced. The thicker metal used for coarse screens allows a larger percentage of opening to be used than in fine screens (see Tables 197, 198 and 199). The percentage of opening for round holes with different arrangements and spaces is as follows: If the space equals half the diameter of the hole the percentage of opening is 40.3% with the 60° arrangement, and 34.9% with the 90° arrangement; but if the space equals the diameter of the hole the percentages of opening are respectively 22.6% and 19.6%. Harrington & King's standard list of plate screens with round punched holes is given in Table 197, which shows also the space between the holes and the net percentage of opening.

TABLE 197.—SIZES OF ROUND PUNCHED HOLES IN PLATE SCREENS, AS MADE BY HARRINGTON & KING.

Diameter of Holes.	Spaces between Holes. (a)	Percentage of Opening.	Diameter of Holes.	Spaces between Holes. (a)	Percentage of Opening.
Mm.	Mm.	%	Mm.	Mm.	%
1	1.38	11	12.5	6.55	26
1.5	1.68	13	15	7.23	28
2	1.97	15	20	8.58	30
2.5	2.26	17	25	13.10	26
3	3.35	13	30	[illegible]	37
4	2.35	24	40	[illegible]	43
5	2.94	24			
6	3.53	24	Inches.		
7	4.11	24	1.75		
7.5	5.20	22	2.00		
8	4.70	24	2.25		
3	6.29	19	2.50		
9	5.29	24	[illegible]	[illegible]	
10	4.29	30	[illegible]	0.[illegible]	

(a) The holes are arranged in equilater[illegible] all case[illegible]

The following is a partial list of Harrington & King's elongated punched holes:

Dimensions of Holes.	Space between Holes.
Inches.	Inches.
⅛x⅛	⅛
1x½	¼
6x3	1

In this list, the sizes between the first and second, and those between the second and third, are graded from one to the other. These holes are arranged in either of three different ways. The dimensions L., W. and S., indicated in Fig. 229, are the length, width and space in the above list.

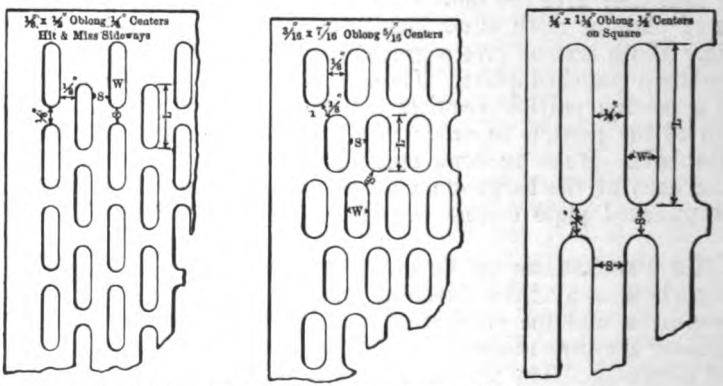

FIG. 229.—ELONGATED PUNCHED SCREEN HOLES.

Table 198 is a partial list of the double crimped wire screens carried in stock by the W. S. Tyler Co. This table illustrates the disadvantage of designating

TABLE 198.—TYLER DOUBLE CRIMPED WIRE SCREENS.*

Meshes per Linear Inch.	Iron or Steel.				Copper or Brass.			
	Ranges in Diameter of Wire.	Ranges in Width of Holes.		Ranges in percentage of Opening.	Ranges in Diameter of Wire.	Ranges in Width of Holes.		Ranges in percentage of Opening.
	Inches.	Inches.	Mm.	%	Inches.	Inches.	Mm.	%
....	1.0–0.375	4	101.6	64–84	.....	.....	.....	.....
....	1.0–0.250	3	76.2	56–85	.....	.....	.....	.....
....	1.0–0.192	2	50.8	44–83	.....	.....	.....	.....
....	0.75–0.162	1	25.4	33–74	.....	.....	.....	.....
....	0.44–0.120	0.5	12.7	28–65	.....	.....	.....	.....
....	0.192–0.092	0.25	6.35	32–53	.....	.....	.....	.....
1	0.244–0.072	0.756–0.928	19.2–23.6	57–86	.....	.....	.....	.....
2	0.192–0.047	0.308–0.453	10.6–14.5	38–82	0.162–0.047	0.338–0.453	8.6–11.5	46–82
3	0.135–0.035	0.198–0.298	5.03–7.57	35–80	0.135–0.035	0.198–0.298	5.03–7.57	35–80
4	0.120–0.028	0.130–0.222	3.30–5.64	27–79	0.120–0.032	0.130–0.218	3.30–5.54	27–76
6	0.080–0.020	0.087–0.147	2.21–3.73	27–78	0.080–0.025	0.087–0.142	2.21–3.61	27–73
8	0.063–0.017	0.062–0.108	1.57–2.74	25–75	0.063–0.020	0.062–0.105	1.57–2.67	25–71
10	0.047–0.015	0.053–0.085	1.35–2.16	28–72	0.054–0.018	0.046–0.082	1.17–2.08	21–67
12	0.041–0.014	0.042–0.069	1.07–1.75	25–69	0.047–0.017	0.036–0.066	0.91–1.68	19–63
16	0.032–0.0095	0.031–0.053	0.77–1.35	25–72	0.035–0.0135	0.0275–0.049	0.70–1.24	19–61
20	0.025–0.009	0.025–0.041	0.64–1.04	25–67	0.025–0.0095	0.025–0.0405	0.64–1.03	25–66
30	0.016–0.009	0.017–0.024	0.44–0.62	26–52	0.017–0.008	0.0163–0.0253	0.41–0.64	24–58
50	0.010–0.008	0.010–0.012	0.25–0.30	25–36	0.011–0.008	0.009–0.012	0.22–0.30	20–36
80	0.00725–0.007	0.0052–0.0055	0.132–0.140	17–19	0.00625	0.00625	0.159	25
100	.....	.....	.....	.....	0.0045	0.0055	0.140	30

* For the 1-mesh screens there are 13 sizes of holes between the limits indicated in the table. This number decreases for the finer screens, until for 80 mesh there are but two sizes of holes for steel and but one for brass.

screens by the number of meshes per linear inch. With the actual commercial sizes, an 8-mesh screen may have holes 24% wider than a 6-mesh, on account of different sizes of wire used, although if the proportional sizes of wire are used the 6-mesh hole is 25% wider than the 8 mesh.

The practice in the mills is given in Table 199, which is summarized from Table 188. The instances of very low percentages of opening may be either bad practice or they may be caused by some local difficulty to be overcome, such as very hard cutting rock or very acid water. In general this table sustains the claim that wire cloth screens have a greater percentage of opening than punched plate.

§ 289. THE THICKNESS OF THE PLATE OR WIRE.—In deciding this there are five main considerations: (1) *The maintenance of the diameter of the hole.* The enlargement of the hole per ton of ore screened will be the same whether the metal is thick or thin, but the thinner metal will be discarded sooner, and hence the change in diameter of hole will be less than with the thicker metal; (2) *The life* will increase with the thickness of the metal up to the limit of enlargement of hole that can be permitted; (3) *The running cost* consists of the first cost and the cost of changing screens, and is modified by the life of the screen. These two costs have opposite effects: the thick screen costs more at start, but is changed less often; the thin costs less, but is changed more often; (4) *The blinding of the hole.* There can be no doubt that blinding of the hole is more apt to take place in a thick than in a thin screen; and further, when

TABLE 199.—VARIATIONS IN THE PERCENTAGE OF OPENING IN THE MILL SCREENS.

Diameters of Holes.	Round Holes in Punched Plate.	Square Holes in Wire Cloth.	Diameters of Holes.	Round Holes in Punched Plate.	Square Holes in Wire Cloth.
Mm.	Percentage of Opening.	Percentage of Opening.	Mm.	Percentage of Opening.	Percentage of Opening.
0.9	.....	25	8.3	39-39	.....
1.2	.....	33	8.5	39	.....
1.3	.....	27	9.0	29	.....
1.5	.....	23-23-22-23	9.5	32-32	.....
2.0	16-16-23-23-23-25	.....	10.0	36-44-44	.....
2.1	.....	25-25	10.3	47	.....
2.5	14-25-25	.....	11.1	44	.....
2.7	.....	28	12.0	36-39	.....
2.8	23	.....	12.7	40	.....
3.0	20-20-20-20-26-31	.....	15.0	32-41-41	.....
3.5	22-22-30-32	47	15.9	36-36	.....
3.6	.....	32-32-32	16.0	36-47-47	.....
4.4	27	.....	19.1	8	.....
4.5	29-29	.....	20.0	30-44	.....
4.6	.....	40	22.2	44-44	.....
4.8	13	.....	25.0	39-44	.....
5.0	18-18-36-36-36-36-36-40	.....	25.4	11-40	.....
5.7	.....	45	31.8	35	.....
6.0	38-39-39	.....	38.1	45-50-50-50	.....
6.4	.....	39-39	40.0	48	.....
7.0	16-19-28-40	.....	54.0	50	.....
8.0	34	.....			

the flare of a punched hole is worn to a rounded shape, this effect will be increased. Cloth screens blind up more easily than plate; (5) *The percentage of opening.* In punched plate screens with large holes the percentage of opening may be made large by using thicker plate and leaving smaller spaces between the holes, which will maintain the necessary strength in the parting bars. In screens with small holes, other conditions exist which have precisely the opposite effect, namely, the plate is apt to be as thick as the hole is wide, and any attempt to thicken the plate further will necessitate placing the holes farther apart to avoid tearing the plate in punching, and this would decrease the per-

centage of opening. With cloth screens increased percentage of opening requires thinner wire, whatever the net size of hole.

Table 200, which is a summary of Table 187, shows the variations in thickness of metal for different sized holes, as found in the mills. Tables 198 and 201 show manufacturers' figures. An inspection of these tables shows that with plate the metal for fine screens is about one-half to three-fourths as thick as the diameter of the holes, and for coarse screens about one-fourth to one-third as thick; with cloth the metal has to be somewhat thicker than with plate, especially for fine screens.

TABLE 200.—RELATION OF THICKNESS OF PLATES AND WIRES TO DIAMETERS OF HOLES AS FOUND IN THE MILLS.

Diameter of Hole.	Thickness of Plate.	Diameter of Wire.	Diameter of Hole.	Thickness of Plate.	Diameter of Wire.
Mm.	Mm.	Mm.	Mm.	Mm.	Mm.
0.9	.....	0.9	7.0	2.1-2.4-4.8-4.8	.....
1.2	.....	0.9	8.0	4.2	.....
1.25	0.9	.....	8.3	3.4-3.4	.....
1.3	.....	1.2	8.5	5.2	.....
1.5	.....	1.7-1.7-1.7-1.7	9.0	4.2-4.8-4.8	.....
2.0	1.2-1.2-1.4-1.7-1.7-1.7	.....	9.5	5.6-5.6	.....
2.1	.....	2.1-2.1	10.0	2.8-2.8-2.8-2.8-6.4	.....
2.3	1.7	.....	10.3	4.2	.....
2.5	1.2-1.7-2.1	.....	11.1	4.8	.....
2.7	.....	2.4	12.0	4.2-4.6	.....
2.8	2.1-2.8-2.8	.....	12.4	4.2	.....
3.0	1.7-2.1-2.1-2.1-2.1-2.8	.....	12.7	4.2-4.2-6.4	.....
3.5	1.7-2.4-2.4	1.6	15.0	3.4-7.5-8.0	.....
3.6	.....	2.8-2.8-2.8	15.9	6.4-6.4	.....
4.4	2.8	.....	16.0	4.6-4.6-6.6	.....
4.5	3.0-3.4	.....	20.0	3.4-12.7	.....
4.6	.....	2.7	22.2	8.0-8.0	.....
4.7	3.4	.....	25.0	5.2-9.5	.....
5.0	1.7-2.1-2.8-2.8-3.4-3.4-3.4-3.4	.....	25.4	6.4-6.4-6.4	.....
5.7	.....	2.8	31.8	12.7	.....
6.0	3.2-3.4-3.4	.....	38.1	6.4	.....
6.4	.....	3.8-3.8	40.0	5.2	.....
6.5	3.8	.....			

TABLE 201.—RELATION OF THICKNESS OF PLATE TO DIAMETER OF HOLES IN PUNCHED SCREENS AS QUOTED.

Diameter of Hole.	Thickness of Plate.		Diameter of Hole.	Thickness of Plate.	
	Rittinger. (a)	Fraser & Chalmers. (b)		Rittinger. (a)	Fraser & Chalmers. (b)
Mm.	Mm.	Mm.	Mm.	Mm.	Mm.
0.25	0.50	.....	5.6	2.00	.....
0.75	.....	0.457	8.0	.....	4.750
1.0	0.75	0.559	15.0	.....	6.350
1.25	.....	0.889	16.0	2.75	6.350
1.4	1.00	.....	22.0	.....	6.350
1.5	.....	1.245	22.6	3.00	.....
2.0	.....	1.651	25.0	.....	6.350
4.0	1.75	2.769	25.4	.....	7.925
5.5	.....	3.404			

(a) "Aufbereitungskunde," page 226. He gives these figures as good practice in 1866. (b) Catalogue No. 7, p. 7. These are the maximum advisable thicknesses in 1900.

§ 290. DIFFICULTIES OF SCREENING.—The ideal condition for screening would be to have the ore spread over the screen so that no two grains ever touched each other, but of course this cannot be attained in practice. The more crowding there is the harder it is for a grain that belongs in the undersize to pass through the holes. Of two similar screens receiving the same quantity of ore, the crowding and the difficulty of screening will be greater in the one where the feed contains the larger percentage of oversize. Another important element lies in the percentage of grains that are of about the diameter of the screen holes. The difficulty of screening increases with this percentage, both because the undersize grains of this class are apt to go into the oversize, and

because grains of this class tend to blind the screen holes and so prevent the finer material passing through.

The reasons that fine screening is more difficult than coarse are that the feed to fine screens contains a much larger *percentage* of oversize and also a much larger percentage of grains that are about the size of the screen holes. Jarring is sometimes used to prevent blinding; for example, the No. 1 trommel in Mill 18 has three strap-iron bands to which cams are attached. The cams on each strap raise a pivoted hammer which falls by gravity and clears the screen. There are four cams in the first set, with lifts of 3½ inches; and five cams in each of the other sets, with lifts of 3 and 2½ inches respectively. Each hammer weighs 7 pounds.

At Mill 40, tailings from jigs whose feed had been through 3-mm. round holes and from jigs whose feed had been through 2.5-mm. round holes (the finest portions having been removed by classifiers before going to the jigs) were sent to a trommel with 1-mm. round holes. The screen soon blinded, and all efforts to keep the holes clear, either by water jets or by automatic jarring, proved impracticable. The cause of the trouble probably was that the feed contained a very large percentage of grains of nearly the same diameter as the holes.

The removal of slimes by classifiers previous to the finest screen sizing is sometimes practiced in order to prevent them from going into the oversize. For example, at Åmmeberg, Sweden, ore that has been through 2.5-mm. screen holes is freed from slimes in a hydraulic classifier before going to a trommel having 1, 1.25, 1.5 and 2 mm. holes.* At Clausthal the ore through 4.2-mm. screen holes goes to a box classifier, the spigot of which is further screened on 3.5, 2 and 1 mm. screens.†

In regard to the blinding of fine screens, it should be said that a flaring hole with the narrow part upward blinds less than a cylindrical hole; that a thin plate screen blinds less than a thick one; a slotted hole blinds less than a round one; and, finally, a screen immersed in two or three inches of water blinds less than one that is simply sprayed with water. Edison has found (see United States Patent 648,934, dated May 8, 1900), that in dry screening the clogging of fine screens can be prevented by passing a large quantity of coarse material over the screen with the fine. On his inclined slotted screens with slots 0.004 inch wide about 90% of the whole load should be coarse, the largest particles being preferably about ⅛-inch diameter. With 0.009-inch slots, 70% should be coarse; and with 0.012-inch slots, 63% should be coarse.

For special difficulties with trommels see § 293.

The Action of Trommels.

In order to fully understand the operation of trommels, we will now consider the relations of their slope, diameter and speed of revolution.

§ 291. Effect of Centrifugal Force.—The increase in centrifugal force as the speed of revolution increases, and the effect of this increase, may be shown as follows:

In Fig. 230 let

w=weight of an ore particle.

c=centrifugal force.

f=natural angle of friction=angle between a horizontal and the tangent to the circle at the point where the ore slides, with gravity acting alone.

i=increase of f due to c.

* *Am. Inst. Min. Eng.*, Vol. XXIV., p. 492.

† *Berg. u. Hüttenwesen des Oberharzes*, (Stuttgart, 1895), p. 222.

v=peripheral velocity of the trommel in feet per second.
r=radius of the trommel in feet.
g=acceleration due to gravity=32.16 feet per second.
s=sliding angle due to g and c combined, which, from the similarity of triangles, is equal to $f+i$.

Now since the sides of a triangle are proportional to the sines of their opposite angles,

$\frac{c}{w}=\frac{\sin i}{\sin f}$ or $\frac{c}{w}\sin f=\sin i$; and substituting, in this formula, the value for centrifugal force, $c=\frac{wv^2}{gr}$, we get $\frac{wv^2}{wgr}\sin f=\sin i$, which by cancellation, gives the required formula, $\frac{v^2}{gr}\sin f=\sin i$, which shows the increase in the angle of friction due to centrifugal force. Table 202 has been calculated by the use of this formula, assuming that $f=35°$. When the sliding angle is 90° greater than the angle of friction due to gravity alone (90°+35°=125°), a particle of ore will be carried completely around the trommel.

TABLE 202.—INCREASE IN THE ANGLE OF FRICTION, DUE TO THE CENTRIFUGAL FORCE OF A TROMMEL, ASSUMING 35° AS THE ANGLE OF FRICTION WHEN THERE IS NO CENTRIFUGAL FORCE.

Revolutions per Minute.	Trommel 30 Inches Diameter.		Trommel 36 Inches Diameter.		Trommel 48 Inches Diameter.		Trommel 72 Inches Diameter.		Trommel 96 Inches Diameter.	
	Centrifugal Force Divided by Force of Gravity.	Sliding Angle.	Centrifugal Force Divided by Force of Gravity.	Sliding Angle.	Centrifugal Force Divided by Force of Gravity.	Sliding Angle.	Centrifugal Force Divided by Force of Gravity.	Sliding Angle.	Centrifugal Force Divided by Force of Gravity.	Sliding Angle.
8	0.03	35°54′	0.03	36° 5′	0.04	36°26′	0.07	37°09′	0.09	37°52′
10	0.04	36°24′	0.05	36°41′	0.07	37°15′	0.10	38°22′	0.14	39°29′
12	0.06	37° 1′	0.07	37°25′	0.10	38°14′	0.15	39°51′	0.20	41°28′
15	0.10	38° 9	0.12	38°47′	0.15	40° 3′	0.23	42°35′	0.31	45°08′
16	0.11	38°35′	0.13	39°18′	0.17	40°45	0.26	43°39′	0.35	46°33′
17	0.12	39° 3′	0.15	39°52′	0.20	41°29′	0.30	44°46′	0.39	48°04′
18	0.14	39°33′	0.17	40°27′	0.23	42°17′	0.33	45°57′	0.44	49°41′
19	0.15	40° 4	0.18	41°05′	0.25	43°07′	0.37	47°14′	0.49	51°24′
20	0.17	40°37′	0.20	41°44′	0.27	44° 0′	0.41	48°34′	0.55	53°14′
25	0.27	43°47′	0.32	45°34′	0.43	49°09′	0.64	56°31′	0.85	64°16′
27.1	.....	.....	.....	.....	.....	.....	.....	.....	1.00	70° 0′
30.0	0.38	47°43′	0.46	50°19′	0.61	55°37′	0.92	66°52′	1.23	79°45′
31.3	.....	.....	.....	.....	.....	.....	1.00	70° 0′	.....	.....
32.4	.....	.....	.....	.....	.....	.....	.....	.....	1.43	90° 0′
35.8	.....	.....	.....	.....	.....	.....	.....	.....	1.74	125° 0′
37.4	.....	.....	.....	.....	.....	.....	1.43	90° 0′	.....	.....
38.3	.....	.....	.....	.....	1.00	70° 0′	.....	.....	.....	.....
40.0	0.68	58° 2′	0.82	62°59′	1.09	73°45′	1.64	104°51′	.....	.....
41.3	.....	.....	.....	.....	.....	.....	1.74	125° 0′	.....	.....
44.2	.....	.....	1.00	70° 0′	.....	.....	.....	.....	.....	.....
45.8	.....	.....	.....	.....	1.43	90° 0′	.....	.....	.....	.....
48.4	1.00	70° 0′	.....	.....	.....	.....	.....	.....	.....	.....
50.6	.....	.....	.....	.....	1.74	125° 0′	.....	.....	.....	.....
52.8	.....	.....	1.43	90° 0′	.....	.....	.....	.....	.....	.....
57.9	1.43	90° 0′	.....	.....	.....	.....	.....	.....	.....	.....
58.4	.....	.....	1.74	125° 0′	.....	.....	.....	.....	.....	.....
64.0	1.74	125° 0′	.....	.....	.....	.....	.....	.....	.....	.....

Fig. 231 shows graphically, for a 36-inch trommel, the rapid increase of centrifugal force due to increase of revolutions; and also the different heights to which the ore will be carried. W, C and R represent the magnitude respectively of the force of gravity (weight), the centrifugal force and the resultant force; and also their respective directions.

§ 292. RATE OF TRAVEL OF THE ORE.—The rate at which ore passes through a trommel depends on the slope of the trommel and the speed of revolution. As the trommel revolves, the ore fragment is carried upward to a point where the

line of steepest declivity makes an angle with a horizontal plane equal to the angle of friction of the ore.

The pitch angle of the helical path that a free particle of ore will follow over the surface of the trommel, may be calculated as follows: In Fig. 232 let the angle s between the plane P, and the horizontal plane be the angle at which

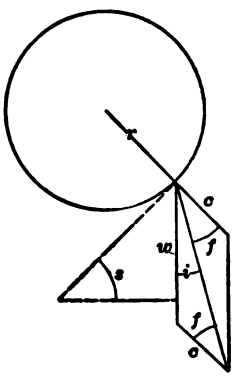

FIG. 230.

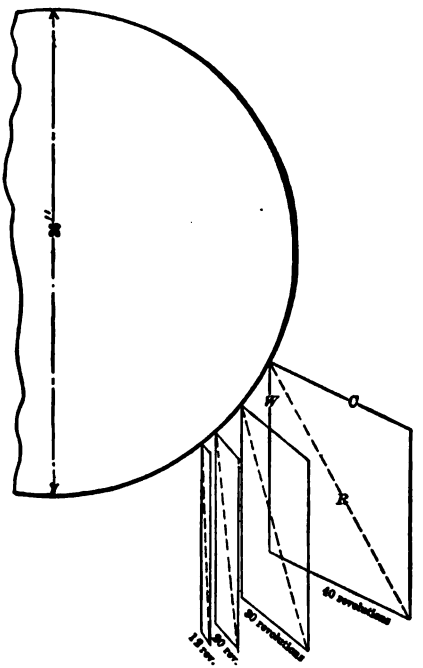

FIG. 231.—CENTRIFUGAL FORCE IN A 36-INCH TROMMEL.
W=weight of ore particles. C=centrifugal force. R=resultant.

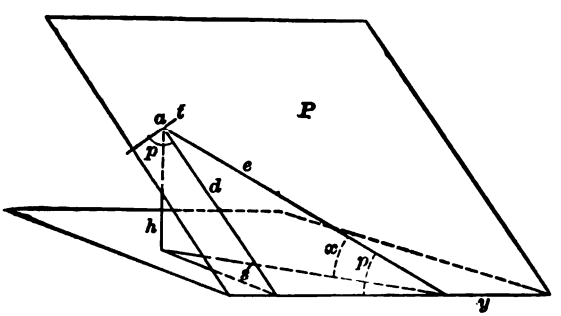

FIG. 232.

the ore slides. Let the line d be a line of steepest declivity in the plane P. Let the line e represent an element of the cylindrical surface of a trommel. Let t be a tangent to the cylinder in a plane of revolution of the trommel, and in the plane P. Let h be the distance from the point a on the trommel to the horizontal plane. The angle x, then, is the slope angle of the trommel, and

the angle p between d and t is the pitch angle, and is the same as the angle between e and y. Then:

$$\frac{h}{d}=\sin s, \text{ hence } d=\frac{h}{\sin s} \qquad \frac{h}{e}=\sin x, \text{ hence } e=\frac{h}{\sin x}.$$

$$\text{Hence, } \sin p=\frac{d}{e}=\frac{\frac{h}{\sin s}}{\frac{h}{\sin x}}=\frac{\sin x}{\sin s}$$

which gives the value of the required pitch angle. If the axis of a cylindrical trommel is horizontal, the pitch angle is 0° and the ore will not move in an axial direction. If the slope of the axis is the same as the angle at which the ore slides, the pitch angle is 90° and the ore will pass out of the trommel along an element of the cylinder when the trommel is still.

Tables 203*a* and 203*b* give the rotations made, and also the helical distances traveled by an ore particle to get through a trommel under varying conditions of diameter, slope, revolution and length, as computed from the formula $\sin p=\frac{\sin x}{\sin s}$ and from simple equations depending on this formula.

TABLE 203*a*.—ROTATIONS OF TROMMELS TO DELIVER A GRAIN OF OVERSIZE, AND THE HELICAL DISTANCE TRAVELED BY THE GRAIN.

Abbreviations.—Deg.=degrees; In.=inches.

Trommel 30 Inches Diameter.

Slope of Trommel.		16 Revolutions a Minute. Sliding Angle, 38° 35′.					18 Revolutions a Minute. Sliding Angle, 39° 33′.					20 Revolutions a Minute. Sliding Angle, 40° 37′.				
		Pitch Angle.	Rotations to Deliver a Grain of Oversize when Length of Trommel is		Helical Distance Traveled by a Grain when Length of Trommel is		Pitch Angle.	Rotations to Deliver a Grain of Oversize when Length of Trommel is		Helical Distance Traveled by a Grain when Length of Trommel is		Pitch Angle.	Rotations to Deliver a Grain of Oversize when Length of Trommel is		Helical Distance Traveled by a Grain when Length of Trommel is	
Deg.	In. per Foot.		60 In.	72 In.	60 In.	72 In.		60 In.	72 In.	60 In.	72 In.		60 In.	72 In.	60 In.	72 In.
					In.	In.				In.	In.				In.	In.
2°	⅜+	3°12′	11.36	13.63	1,072	1,286	3°09′	11.60	13.92	1,095	1,314	3°04′	11.86	14.23	1,119	1,343
2°30′	½+	4°01′	9.08	10.90	858	1,029	3°56′	9.27	11.13	876	1,051	3°51′	9.48	11.38	896	1,074
3°30′	¾−	5°37′	6.47	7.77	613	735	5°30′	6.61	7.93	626	751	5°23′	6.76	8.11	640	768
5°	1 +	8°02′	4.51	5.41	429	515	7°52′	4.61	5.53	438	526	7°42′	4.71	5.66	448	538
7°	1½−	11°16′	3.20	3.83	307	368	11°02′	3.27	3.92	314	376	10°47′	3.34	4.01	321	385
9°30′	2	15°21′	2.32	2.78	227	272	15°01′	2.37	2.85	232	278	14°41′	2.43	2.91	237	284
14°	3	22°49′	1.51	1.82	155	186	22°20′	1.55	1.86	158	189	21°49′	1.59	1.91	161	194

Trommel 36 Inches Diameter.

		16 Revolutions a Minute. Sliding Angle, 39° 18′.					18 Revolutions a Minute. Sliding Angle, 40° 27′.					20 Revolutions a Minute. Sliding Angle, 41° 44′.				
2°	⅜+	3°09′	9.64	11.56	1,089	1,306	3°05′	9.85	11.82	1,116	1,338	3° 0′	10.12	12.15	1,144	1,373
2°30′	½+	3°57′	7.68	9.21	871	1,045	3°51′	7.87	9.45	892	1,071	3°45	8.09	9.70	916	1,099
3°30′	¾−	5°32′	5.48	6.57	623	747	5°24′	5.61	6.74	638	765	5°16′	5.76	6.91	654	785
5°	1 +	7°55′	3.82	4.58	436	523	7°43′	3.91	4.70	447	536	7°31′	4.02	4.82	458	550
7°	1½−	11°06′	2.71	3.25	311	374	10°50′	2.77	3.33	319	383	10°33′	2.85	3.42	328	393
9°30′	2	15°06′	1.97	2.36	230	276	14°44′	2.02	2.42	236	283	14°21′	2.07	2.49	242	290
14°	3	22°27′	1.28	1.54	157	189	21°54′	1.32	1.58	161	193	21°19′	1.36	1.63	165	198

TABLE 203*b*.—ROTATIONS OF TROMMELS TO DELIVER A GRAIN OF OVERSIZE, AND THE HELICAL DISTANCE TRAVELED BY THE GRAIN.

Slope of Trommel.	15 Revolutions a Minute. Sliding Angle, 40° 3′.					17 Revolutions a Minute. Sliding Angle, 41° 29′				
	Pitch Angle.	Rotations to Deliver a Grain of Oversize when Length of Trommel is		Helical Distance Traveled by a Grain when Length is		Pitch Angle.	Rotations to Deliver a Grain of Oversize when Length of Trommel is		Helical Distance Traveled by a Grain when Length is	
Degrees.		60 In.	72 In.	60 In.	72 In.		60 In.	72 In.	60 In.	72 In.
Trommel 48 Inches Diameter.										
2° 0′	3°07′	7.32	8.79	1,106	1,328	3°01′	7.54	9.05	1,139	1,366
2°30′	3°53′	5.86	7.03	885	1,062	3°47′	6.03	7.23	911	1,093
3°30′	5°27′	4.18	5.01	633	758	5°17′	4.30	5.16	651	781
5° 0′	7°47′	2.91	3.49	443	531	7°34′	3.00	3.60	456	547
7° 0′	10°55′	2.06	2.48	317	380	10°36′	2.13	2.55	326	391
9°30′	14°52′	1.50	1.80	234	281	14°26′	1.55	1.86	241	289
14° 0′	22°05′	0.98	1.18	160	192	21°25′	1.01	1.22	164	197
Trommel 72 Inches Diameter.										
	12 Revolutions a Minute. Sliding Angle, 39° 51′.					15 Revolutions a Minute. Sliding Angle, 42° 35′.				
2° 0′	3°07′	4.86	5.84	1,102	1,323	2°57′	5.14	6.16	1,164	1,396
2°30′	3°54′	3.89	4.67	881	1,058	3°42′	4.11	4.93	931	1,117
3°30′	5°28′	2.77	3.33	630	756	5°11′	2.93	3.51	665	798
5° 0′	7°49′	1.93	2.32	441	529	7°24′	2.04	2.45	466	559
7° 0′	10°58′	1.37	1.64	316	379	10°23′	1.45	1.74	333	400
9°30′	14°56′	1.00	1.19	233	280	14°07′	1.05	1.27	246	295
14° 0′	22°11′	0.65	0.78	159	191	20°57′	0.69	0.83	168	201
Trommel 96 Inches Diameter.										
	10 Revolutions a Minute. Sliding Angle, 39° 29′.					12 Revolutions a Minute. Sliding Angle, 41° 28′				
2° 0′	3°09′	3.62	4.34	1,093	1,312	3°01′	3.77	4.52	1,139	1,366
2°30′	3°56′	2.99	3.47	875	1,050	3°47′	3.01	3.62	911	1,093
3°30′	5°31′	2.06	2.48	625	750	5°17′	2.15	2.58	651	781
5° 0′	7°53′	1.44	1.73	438	525	7°34′	1.50	1.80	456	547
7° 0′	11°02′	1.02	1.22	313	376	10°36′	1.06	1.27	326	391
9°30′	15°03′	0.74	0.89	231	277	14°26′	0.77	0.93	241	289
14° 0′	22°22′	0.48	0.58	158	189	21°26′	0.51	0.61	164	197

EFFECT OF SLOPE.—This may be stated in two ways: Other things being equal, with the same depth of bank increase of slope increases enormously the conveying power of the trommel; or we may say that for the same quantity of ore, with the steeper slope, the bank will be much thinner, and hence the screening much better. These facts, for a trommel 36 inches in diameter, 72 inches long, revolving 20 times per minute, are shown in Tables 204 and 205. It should be stated that where such thin banks as ¼ inch thick are given, it simply means that that is the average depth of continuous layers that would equal in weight the sum of the scattered ore fragments. These tables are based on Table 203*a*.

TABLE 204.—CAPACITY IN 24 HOURS OF A TROMMEL 36 INCHES DIAMETER, 72 INCHES LONG, REVOLVING 20 TIMES A MINUTE, FOR GIVEN DEPTHS OF BANK, AND AT DIFFERENT SLOPES; ASSUMING THAT 1 CUBIC FOOT OF BROKEN ORE WEIGHS 94 POUNDS.

Slope of Trommel.		Ore Bank ¼ in. Deep. Trommel Contains 3.91 Pounds of Ore at any time. (*a*)	Ore Bank ½ in. Deep. Trommel Contains 11.03 Pounds of Ore at any time. (*a*)	Ore Bank 1 in. Deep. Trommel Contains 31.06 Pounds of Ore at any time. (*a*)	Ore Bank 2 in. Deep. Trommel Contains 87.14 Pounds of Ore at any time. (*a*)
Degrees.	In. per Foot.				
2°	¾+	4.6 tons.	13.1 tons.	36.8 tons.	103.3 tons.
2°30′	½+	5.8 tons.	16.4 tons.	46.1 tons.	129.4 tons.
3°30′	¾−	8.1 tons.	23.0 tons.	64.7 tons.	181.6 tons.
5°	1 +	11.7 tons.	33.0 tons.	92.8 tons.	260.3 tons.
7°	1½−	16.5 tons.	46.4 tons.	130.8 tons.	366.9 tons.
9°30′	2	22.6 tons.	63.8 tons.	179.6 tons.	503.9 tons.
14°	3	34.5 tons.	97.4 tons.	274.4 tons.	769.8 tons.

(*a*) Including the undersize.

TABLE 205.—THICKNESS OF BANK AND WEIGHT OF ORE IN TROMMELS 30 AND 36 INCHES DIAMETER, 72 INCHES LONG, REVOLVING 20 TIMES A MINUTE, WITH DIFFERENT RATES OF FEED AND AT DIFFERENT SLOPES; ASSUMING THAT 1 CUBIC FOOT OF BROKEN ORE WEIGHS 94 POUNDS.

Abbreviations.—Deg.=degrees; Ft.=foot; In.=inches; p.=per.

Slope of Trommel.		Trommel 30 Inches Diameter, 72 Inches Long.									
		100 Tons Screened in 24 Hours.		125 Tons Screened in 24 Hours.		150 Tons Screened in 24 Hours.		200 Tons Screened in 24 Hours.		300 Tons Screened in 24 Hours.	
		Depth of Ore Bank.	Ore in Trommel at any time. (a)	Depth of Ore Bank.	Ore in Trommel at any time. (a)	Depth of Ore Bank.	Ore in Trommel at any time. (a)	Depth of Ore Bank.	Ore in Trommel at any time. (a)	Depth of Ore Bank.	Ore in Trommel at any time. (a)
Deg.	In. p. Ft.	Inches.	Pounds.	Inches.	Pounds.	Inches.	Pounds.	Inches.	Pounds.	Inches.	Pounds.
2°	¾+	2.31	98.8	2.69	123.5	3.06	148.2	3.78	197.7	4.92	296.5
2°30′	½+	1.99	79.0	2.31	98.8	2.61	118.5	3.20	158.1	4.23	237.1
3°30′	¾−	1.60	56.3	1.85	70.4	2.08	84.5	2.53	112.7	3.35	169.0
5°	1 +	1.25	39.3	1.45	49.1	1.64	58.9	1.99	78.6	2.60	117.9
7°	1½−	0.98	27.8	1.15	34.8	1.30	41.7	1.58	55.7	2.07	83.5
9°30′	2	0.79	20.2	0.93	25.3	1.04	30.3	1.27	40.4	1.67	60.6
14°	3	0.60	13.3	0.69	16.6	0.78	19.9	0.95	26.5	1.26	39.8
		Trommel 36 Inches Diameter, 72 Inches Long.									
2°	¾+	1.96	84.4	2.28	105.5	2.58	126.5	3.12	168.7	4.12	253.1
2°30′	½+	1.69	67.4	1.96	84.2	2.21	101.0	2.69	134.7	3.52	202.1
3°30′	¾−	1.35	48.0	1.57	60.0	1.76	72.0	2.14	96.0	2.81	144.0
5°	1 +	1.05	33.5	1.23	41.8	1.39	50.2	1.68	66.9	2.20	100.4
7°	1½−	0.83	23.7	0.97	29.7	1.10	35.6	1.33	47.5	1.75	71.2
9°30′	2	0.68	17.3	0.78	21.6	0.88	25.9	1.07	34.6	1.42	51.9
14°	3	0.51	11.3	0.58	14.1	0.66	17.0	0.80	22.7	1.06	34.0

(a) Including the undersize.

THE EFFECT OF LENGTH AND SLOPE COMBINED.—Table 206 shows relative weights of ore conveyed by trommels with equal depths of bank in any given time. These quantities are calculated on the basis that 36-inch, 48-inch, 72-inch and 96-inch trommels contain respectively 1.1, 1.27, 1.56 and 1.80 times as much ore at any given moment as a 30-inch trommel of the same length. These figures are practically true for banks varying from ¼ inch to 2 inches in depth. The greatest error in the table is 0.8%. To eliminate this slight error would require a separate table for each depth. Table 207 shows, for the same diameters and slopes as in Table 206, the relative lengths that will give the same length of helical path in all cases; equal lengths of path being necessary to yield the same quality of screening, provided there is the same depth of bank in each case. Both of these tables are based on Tables 203*a* and 203*b*. Two examples of their use follow: If the maximum capacity of a trommel 96 inches in diameter, sloping 14°, revolving 12 times per minute, is called 100 units of

TABLE 206.—RELATIVE WEIGHTS CONVEYED BY TROMMELS WITH ORE BANKS OF ANY DEFINITE DEPTH UP TO 2 INCHES.

Slope of Trommel.		Trommel 30 Inches Diameter.			Trommel 36 Inches Diameter.			Trommel 48 Inches Diameter		Trommel 72 Inches Diameter		Trommel 96 Inches Diameter	
		Revolutions per Minute.			Revolutions per Minute.			Revolutions per Minute.		Revolutions per Minute.		Revolutions per Minute.	
Deg.	Inches per Ft.	16	18	20	16	18	20	15	17	12	15	10	12
2° 0′	¾+	3.3	3.7	4.0	4.3	4.8	5.1	6.1	6.8	9.1	10.7	11.7	13.5
2° 30′	½+	4.2	4.6	5.0	5.4	5.9	6.4	7.7	8.5	11.4	13.4	14.7	16.9
3° 30′	¾−	5.8	6.4	7.0	7.6	8.3	9.0	10.8	11.9	15.9	18.8	20.6	23.7
5° 0′	1 +	8.4	9.2	10.0	10.9	12.0	12.9	15.5	17.0	22.9	27.1	29.5	34.0
7° 0′	1½−	11.8	13.0	14.1	15.4	16.9	18.2	21.8	23.9	32.2	38.1	41.7	48.1
9° 30′	2	16.3	17.9	19.4	21.1	23.2	25.1	30.0	32.9	44.2	52.6	57.4	66.2
14° 0′	3	25.0	27.4	29.7	32.5	35.5	38.2	45.9	50.5	67.9	80.0	88.5	100.0

TABLE 207.—RELATIVE LENGTHS OF TROMMELS NECESSARY FOR THE CAPACITIES GIVEN IN TABLE 206.

Slope of Trommel.		Trommel 30 Inches Diameter.			Trommel 36 Inches Diameter.			Trommel 48 Inches Diameter		Trommel 72 Inches Diameter		Trommel 96 Inches Diameter	
		Revolutions per Minute.			Revolutions per Minute.			Revolutions per Minute.		Revolutions per Minute.		Revolutions per Minute.	
Deg.	Inches per Ft.	16	18	20	16	18	20	15	17	12	15	10	12
		Relative Lengths of Trommels.											
2° 0′	3/8+	14.5	14.2	13.9	14.2	13.9	13.5	14.0	13.6	14.1	13.3	14.2	13.6
2°30′	1/2+	18.1	17.7	17.3	17.8	17.4	16.9	17.5	17.0	17.6	16.6	17.7	17.0
3°30′	3/4−	25.3	24.8	24.2	24.9	24.3	23.7	24.5	23.8	24.6	23.3	24.8	23.8
5° 0′	1 +	36.1	35.4	34.6	35.6	34.7	33.8	35.0	34.0	35.1	33.3	35.4	34.0
7° 0′	1¼−	50.5	49.4	48.3	49.8	48.6	47.3	48.9	47.5	49.1	46.5	49.5	47.5
9°30′	2	68.3	66.8	65.4	67.4	65.7	64.0	66.2	64.3	66.5	63.0	67.1	64.3
14° 0′	3	100.0	98.1	96.3	98.7	96.3	94.0	96.9	94.5	97.5	92.3	98.1	94.5

weight, the same quality of screening will be done by a trommel 36 inches in diameter with the same slope, revolving 20 times per minute, with a capacity of 38.2 units of weight, and the relative lengths would be 94.5 and 94.0, that is to say, practically the same length. If, on the other hand, the 36-inch trommel had sloped 5° instead of 14°, the capacity would be only 12.9 units of weight, but the necessary length would be reduced to 33.8. The capacity is reduced more than the length. In like manner a great variety of conditions may be compared. Capacity cannot be much increased, however, by increasing length without increasing slope also. For example, if a trommel 5 feet long is screening well to its full capacity, and it is attempted to double the capacity by doubling the length, the first 5 feet will be overcrowded and screening poorly, and the second 5 feet will also be overcrowded and screening poorly; but by doubling the length and at the same time increasing the slope, the capacity can be doubled (see Tables 206 and 207). If, however, there is not enough fall to permit an increase of either length or slope, the 2 five-foot lengths may be placed side by side and the ore divided between them.

Practically, the mill man aims, as a rule, not at great quantity but at good quality; and when he seeks this by the 14° slope, he does not try for the enormous capacity that the trommel will give if its helical path is lengthened as above, but rather for the very much thinner bank that the 14° slope will give on the same quantity, in order to give the greatly improved quality of screening that will result. The thin bank does away with the necessity of increasing the length.

Effect of Speed.—Table 206 shows that the capacity is noticeably increased with the speed of revolution. For example: A 36-inch trommel, sloping 5°, making 16 revolutions a minute, screens 10.9 units of weight, while if its revolutions be put up to 20, it will screen 12.9 units. The increasing speed, to be sure, increases the centrifugal force, which tends to blind the screen, but the effect of this probably is not serious for a 36-inch trommel until we go beyond 20 revolutions a minute. See Fig. 231 and § 272 (paragraph on Revolutions).

The Effect of Varying the Diameter.—Tables 206 and 207 show that, with the same number of revolutions and the same slope, the capacity of a 36-inch trommel is practically 1.3 times that of a 30-inch trommel of the same length. The centrifugal force, however, is greater in the former, and to make a perfectly fair comparison, the revolutions must be so regulated as to make the centrifugal force the same in the two machines. The depth of bank and the quality of screening will then be the same in both trommels, and the 36-inch trommel will have practically 1.2 times the capacity of the 30-inch trommel; that is to say, the capacities of the two are in proportion to their diameters.

In fact, when the lengths and slopes are the same, and the speeds are such as to make the centrifugal force the same, the capacities of any two trommels are practically proportional to their diameters, for the depths of bank under consideration (2 inches or less). The helical distance traveled will be exactly the same for all diameters if the lengths and slopes are alike, so that the wear on screens, per ton of ore, will be the same. The frequency of changing screens will be the same, but the labor of changing, per ton of ore, will be inversely as the diameters. It is clear then that the running expense of a large diameter trommel is no greater and may be even less than that of a small one, per ton of ore treated. On this account, diameters which are much greater than those commonly used have been computed and placed in the tables for convenience of mill men who may desire to experiment in this direction. Diameters equal to the largest shown in the tables are sometimes used for coal. It should be stated that the first cost of trommels will increase somewhat more rapidly than the diameters.

§ 293. Depth of Bank and Quality of Work depend mainly upon the slope of the trommel, the rate of feeding, and the speed of revolution. If the bank is too deep good screening cannot be done, no matter how long the trommel is. If the bank is too thin, time is wasted.

At Laurenburg a conical trommel having 8-mm. round holes with 28 inches large diameter, 49 inches perforated length and 2° 50′ slope, has been replaced by one with 64 inches large diameter, 26 inches perforated length and 5° 45′ slope run at 6 revolutions per minute.[18] The steeper slope and greater diameter have both helped to diminish the depth of bank and to improve screening to an extent which warranted shortening the screen. The net result was less wear of screen and less slimes from abrasion of the ore.

The importance of steeper slope and shorter length for a given capacity does not appear to be perfectly understood. The following figures have been taken from Table 186 to illustrate this point:

Slope of Trommel.	Number of Trommels 36 Inches to 50 Inches Long.	Number of Trommels 60 Inches Long.	Number of Trommels 72 Inches Long.	Number of Trommels 90 Inches to 168 Inches Long.
1° 5′ to 3°55′	7	10	2	25
4° 5′ to 4°45′	2	5	5	5
5° to 5°55′	2	.....	17	.....
7° 5′ to 7°10′	.....	.....	3	4
8°30′	.....	.....	1	.....
9°30′	.....	7	4	.....
14°	1	.....	.....	.....

There are three large entries in this list which appear to indicate that this problem is being worked out by natural selection: 25 very long trommels have from 1° 5′ to 3° 55′ slope; 17 six-foot trommels have from 5° to 5° 55′ slope; 7 five-foot trommels have 9° 30′ slope. Here, throwing out certain odd figures, which may be considered exceptional, we have evidence that mill men recognize that if a gentle slope is to be used the trommel must be long, while if a steep slope is used it may be short. If it can be short, it should be, in order to prevent wear of screen and breakage of ore.

Table 186 shows that it is not an uncommon practice to diminish the slope and increase the length as the size of the ore diminishes. This is done on the basis that the fine sizes are harder to screen and should therefore be kept longer in the screen. There seems no reason, however, why a fine size should screen more advantageously at a gentle angle than a coarse size. If, then, steep slopes thin the banks and improve screening for coarse screens, they will also do it for fine. It is probable that short screens, 5 feet long, with somewhere from

9° to 14° slope, will be found so much more efficient for screening, and so much less expensive, that they will be adopted for all sizes, coarse and fine.

TESTS OF MILL WORK.—The author obtained samples of trommel products from Mills 22, 28, 30 and 38 in order, by carefully sizing them on hand screens, to determine the quality of the work done in the mills; and then, if possible, to explain any differences in the quality of the work by studying the various

TABLE 208.—SIZING TESTS OF TROMMEL PRODUCTS FROM MILL 22.*

	Mill Sizes.					
	Through 12 on 6 mm.		Through 6 on 3 mm.		Through 3 mm.	
Number on Fig. 535.	1		2		4	
	Percent.	Cumulative Percent.	Percent.	Cumulative Percent.	Percent.	Cumulative Percent.
Through 16.0 on 11.2 mm.	4.0	4.0	.....	.....	.....	.....
" 11.2 " 8.02 "	34.8	38.8	.....	.....	.....	.....
" 8.02 " 5.61 "	45.3	84.1	2.4	2.4	.....	.....
" 5.61 " 3.94 "	13.5	97.6	45.3	47.7	0.2	0.2
" 3.94 " 2.69 "	1.7	99.3	48.5	96.2	20.8	21.0
" 2.69 " 1.89 "	0.3	99.6	2.5	98.7	26.8	47.8
" 1.89 " 1.49 "	0.1	99.7	0.5	99.2	13.5	61.3
" 1.49 " 0.945 "	.....	.....	0.3	99.5	14.6	75.9
" 0.945 " 0.667 "	.....	.....	0.2	99.7	7.8	83.7
" 0.667 " 0.493 "	.....	.....	0.1	99.8	5.1	88.8
" 0.493 " 0.371 "	.....	.....	.....	.....	1.4	90.2
" 0.371 " 0.270 "	.....	.....	.....	.....	2.7	92.9
" 0.270 " 0.158 "	.....	.....	.....	.....	3.2	96.1
" 0.158 " 0.119 "	.....	.....	.....	.....	0.9	97.0
" 0.119 " 0.073 "	.....	.....	.....	.....	1.2	98.2
" 0.073 " 0.069 "	.....	.....	.....	.....	0.2	98.4
Fines	0.4	.....	0.3	.....	1.3	.....
Total	100.1	.....	100.1	.....	99.7	.....

* The significance of the columns headed "Cumulative percent." is explained in § 863–§ 866.

TABLE 209.—SIZING TESTS OF TROMMEL PRODUCTS FROM MILL 28.*

	Mill Sizes.																			
	Feed.		Through 40 on 25 mm.		Through 25 on 16 mm.		Through 16 on 12 mm.		Through 12 on 8 mm.		Through 8 on 5 mm.		Through 5 on 3.5 mm.		Thr'ugh 3.5 on 2 mm.		Thr'ugh 2 mm.	
Number on Fig. 537.	1		2		3		4		5		6		7		8		9	
Through	Percent.	Cumulative Percent.	Percent.	Cumulative Percent.	Percent.	Cumulative Percent.	Percent.	Cumulative Percent.	Percent.	Cumulative Percent.	Percent.	Cumulative Percent.	Percent.	Cumulative Percent.	Percent.	Cumulative Percent.	Percent.	Cumulative Percent.
44.3 on 31.9 mm.	5.9	5.9	....	....	....	....	....	....	....	....	....	....	....	....	....	....	....	....
31.9 " 22.3 "	16.6	22.5	100.0	100	17.9	17.9	....	....	....	....	....	....	....	....	....	....	....	....
22.3 " 16.0 "	13.3	35.8	....	....	82.1	100	4.5	4.5	....	....	....	....	....	....	....	....	....	....
16.0 " 11.2 "	16.4	52.2	....	....	....	....	94.9	99.4	62.4	62.4	....	....	....	....	....	....	....	....
11.2 " 8.02 "	9.8	62.0	....	....	....	....	0.6	100	36.0	98.4	....	....	....	....	....	....	....	....
8.02 " 5.61 "	8.8	70.8	....	....	....	....	....	....	1.6	100	58.9	58.9	0.3	0.3	....	....	....	....
5.61 " 3.94 "	6.2	77.0	....	....	....	....	....	....	....	....	40.4	99.3	72.0	72.3	....	....	....	....
3.94 " 2.69 "	4.7	81.7	....	....	....	....	....	....	....	....	0.5	99.8	27.7	100	51.0	51.0	....	....
2.69 " 1.89 "	2.9	84.6	....	....	....	....	....	....	....	....	....	....	....	....	44.2	95.2	....	....
1.89 " 1.49 "	1.7	86.3	....	....	....	....	....	....	....	....	....	....	....	....	4.3	99.5	5.6	5.6
1.49 " 0.945 "	2.2	88.5	....	....	....	....	....	....	....	....	....	....	....	....	....	....	21.2	26.8
0.945 " 0.667 "	1.6	90.1	....	....	....	....	....	....	....	....	....	....	....	....	....	....	16.3	43.1
0.667 " 0.493 "	1.3	91.4	....	....	....	....	....	....	....	....	....	....	....	....	....	....	13.7	56.8
0.493 " 0.371 "	0.4	91.8	....	....	....	....	....	....	....	....	....	....	....	....	....	....	5.6	62.4
0.371 " 0.270 "	1.0	92.8	....	....	....	....	....	....	....	....	....	....	....	....	....	....	8.9	71.3
0.270 " 0.158 "	1.5	94.3	....	....	....	....	....	....	....	....	....	....	....	....	....	....	13.8	85.1
0.158 " 0.119 "	0.8	95.1	....	....	....	....	....	....	....	....	....	....	....	....	....	....	3.8	88.9
0.119 " 0.073 "	1.2	96.3	....	....	....	....	....	....	....	....	....	....	....	....	....	....	5.6	94.5
0.073 " 0.069 "	0.3	96.6	....	....	....	....	....	....	....	....	....	....	....	....	....	....	0.9	95.4
Fines	3.1	....	....	....	....	....	....	....	....	....	....	....	....	....	....	....	4.4	....
Total	99.7	....	100.0	....	100.0	....	100.0	....	100.0	....	99.8	....	100.0	....	99.5	....	99.8	....

* The significance of the columns headed "Cumulative percent." is explained in § 863–§ 866.

adjustments of the mill screens. The results are shown in Tables 208, 209, 210 and 211. Before examining them it will be well to point out the causes of unsatisfactory work. If the screen holes are smaller than they are rated, the oversize product will contain an excessive amount of fines; while if the holes are larger the oversize will appear to be more free from fines than it should, and the next smaller oversize will contain larger grains than it should. If the

TABLE 210.—SIZING TESTS OF TROMMEL PRODUCTS FROM MILL 30.*

	Mill Sizes.											
	Through 25 on 15 mm.		Through 15 on 10 mm.		Through 10 on 7 mm.		Through 7 on 5 mm.		Through 5 on 3 mm.		Through 3 mm.	
Number on Fig. 539.	1		2		3		4		5		6	
	Percent.	Cumulative Percent.	Percent.	Cumulative Percent.	Percent.	Cumulative Percent.	Percent.	Cumulative Percent.	Percent.	Cumulative Percent.	Percent.	Cumulative Percent.
Through 31.9 on 22.3 mm.	2.3	2.3	.....	.....	.....	.....	.....	.....	.....	.....	.....	.....
" 22.3 " 16.0 "	23.0	25.3	.....	.....	.....	.....	.....	.....	.....	.....	.....	.....
" 16.0 " 11.2 "	53.1	78.4	18.2	18.2	.....	.....	.....	.....	.....	.....	.....	.....
" 11.2 " 8.02 "	17.0	95.4	51.6	69.8	7.4	7.4	.....	.....	.....	.....	.....	.....
" 8.02 " 5.61 "	2.9	98.3	23.3	93.1	47.7	55.1	4.0	4.0	.....	.....	.....	.....
" 5.61 " 3.94 "	0.5	98.8	3.7	96.8	32.4	87.5	36.5	40.5	2.6	2.6	.....	.....
" 3.94 " 2.69 "	0.2	99.0	1.2	98.0	9.0	96.5	40.2	80.7	23.0	25.6	0.5	0.5
" 2.69 " 1.89 "	0.1	99.1	0.7	98.7	2.0	98.5	13.5	94.2	28.0	53.6	6.4	6.9
" 1.89 " 1.49 "	0.1	99.2	0.2	98.9	0.5	99.0	2.9	97.1	16.1	69.7	9.4	16.3
" 1.49 " 0.945 "	.....	.....	0.2	99.1	0.3	99.3	1.7	98.8	19.1	88.8	20.5	36.8
" 0.945 " 0.667 "	.....	.....	.....	.....	0.1	99.4	0.4	99.2	7.0	95.8	14.2	51.0
" 0.667 " 0.493 "	.....	.....	.....	.....	.....	.....	0.1	99.3	2.3	98.1	11.3	62.3
" 0.493 " 0.371 "	.....	.....	.....	.....	.....	.....	.....	.....	0.4	98.5	2.6	64.9
" 0.371 " 0.270 "	.....	.....	.....	.....	.....	.....	.....	.....	0.5	99.0	6.0	70.9
" 0.270 " 0.158 "	.....	.....	.....	.....	.....	.....	.....	.....	0.4	99.4	9.7	80.6
" 0.158 " 0.119 "	.....	.....	.....	.....	.....	.....	.....	.....	0.1	99.5	3.3	83.9
" 0.119 " 0.073 "	.....	.....	.....	.....	.....	.....	.....	.....	0.2	99.7	4.3	88.2
" 0.073 " 0.069 "	.....	.....	.....	.....	.....	.....	.....	.....	.....	.....	0.9	89.1
Fines	0.9	.....	0.9	.....	0.5	.....	0.5	.....	0.3	.....	9.5	.....
Total	100.1	.....	100.0	.....	99.9	.....	99.8	.....	100.0	.....	98.6	.....

* The significance of the columns headed "Cumulative percent." is explained in § 863–§ 866.

TABLE 211.—SIZING TESTS OF TROMMEL PRODUCTS FROM MILL 38.*

	Mill Sizes.							
	Through 38.1 on 22.2 mm.		Through 22.2 on 9.5 mm.		Through 9.5 on 5 mm.		Through 5 on 2.5 mm.	
Number on Fig 541	1		2		3		4	
	Percent.	Cumulative Percent.	Percent.	Cumulative Percent.	Percent.	Cumulative Percent.	Percent.	Cumulative Percent.
Through 44.3 on 31.9 mm.	24.3	24.3	.....	.....	.....	.....	.....	.....
" 31.9 " 22.3 "	41.2	65.5	0.4	0.4	.....	.....	.....	.....
" 22.3 " 16.0 "	29.4	94.9	17.6	18.0	.....	.....	.....	.....
" 16.0 " 11.2 "	4.2	99.1	38.2	56.2	.....	.....	.....	.....
" 11.2 " 8.02 "	0.2	99.3	26.0	82.2	0.8	0.8	.....	.....
" 8.02 " 5.61 "	.....	.....	15.4	97.6	42.0	42.8	2.2	2.2
" 5.61 " 3.94 "	.....	.....	1.6	99.2	38.0	80.8	21.4	23.6
" 3.94 " 2.69 "	.....	.....	0.3	99.5	10.1	90.9	42.3	65.9
" 2.69 " 1.89 "	.....	.....	0.1	99.6	2.8	93.7	21.7	87.6
" 1.89 " 1.49 "	.....	.....	.....	.....	1.1	94.8	6.9	94.5
" 1.49 " 0.945 "	.....	.....	.....	.....	1.2	96.0	3.8	98.3
" 0.945 " 0.667 "	.....	.....	.....	.....	0.8	96.8	0.8	99.1
" 0.667 " 0.493 "	.....	.....	.....	.....	0.7	97.5	0.3	99.4
" 0.493 " 0.371 "	.....	.....	.....	.....	0.2	97.7	.....	.....
" 0.371 " 0.270 "	.....	.....	.....	.....	0.5	98.2	.....	.....
" 0.270 " 0.158 "	.....	.....	.....	.....	0.7	98.9	.....	.....
Fines	0.7	.....	0.4	.....	0.8	.....	0.6	.....
Total	100.0	.....	100.0	.....	99.7	.....	100.0	.....

* The significance of the columns headed "Cumulative percent." is explained in § 863–§ 866.

holes are of the exact size they are rated, some of the following difficulties may occur: the screen is crowded by too rapid feeding; it has too little slope for its length or too little length for its slope; it has too small a percentage of opening; too little water is used to remove the adhering fines; or the holes are partially blinded by the presence of a large percentage of grains about the size of the holes. In any of these cases the percentage of fines in the oversize running down to small sizes will be too large. It should be noticed that a certain amount of fines are produced by abrasion after the screening is finished.

Examination of the results plotted in Fig. 535, Chapter XXI., shows that in Mill 22 the oversize of the 6-mm. screen contains 24% finer than 6 mm.; and the oversize of the 3-mm. screen contains 7% finer than 3 mm.; but the holes in the 3-mm. screen were worn so that the undersize contained 14% coarser than 3 mm. These screens are very long (124 inches) and have very gentle slope (3°). The first screen receives 175 tons of ore in 24 hours.

The samples from Mill 28 were too small in quantity to give a fair representation of the work, especially the first five (namely the feed, and the oversizes of the 25, 16, 12 and 8-mm. screens). For part of the curves on Fig. 537 there were so few points to be plotted that there is some doubt as to the direction of the curves. This is especially true when there is no plotted point near the zero per cent. line. However the curves are sufficient to show that the holes in some of the mill screens were considerably worn; for example, the size "through 12 on 8 mm." contains about 35% coarser than 12 mm.; "through 5 on 3.5 mm." contains about 25% coarser than 5 mm.

Fig. 539 shows that in Mill 30 the 15-mm. oversize contains 67% finer than 15 mm.; the 10-mm. oversize contains 67% finer than 10 mm.; the 7-mm. oversize contains 77% finer than 7 mm.; the 5-mm. oversize contains 85% finer than 5 mm.; and the 3-mm. oversize contains 82% finer than 3 mm. There is no evidence that the holes were enlarged by wear. The screens are arranged tandem, are short (30 and 40 inches) and have gentle slopes (from 3° to 4° 15′). The first screen receives 260 tons in 24 hours.

Fig. 541 shows that in Mill 38 the 22.2-mm. oversize contains 34% finer than 22.2 mm.; the 9.5-mm. oversize contains 30% finer than 9.5 mm.; the 5-mm. oversize contains 40% finer than 5 mm.; and the 2.5-mm. oversize contains 28% finer than 2.5 mm. These screens are of medium length (72 inches), and of moderate slope (4° 45′ to 5° 55′), steeper than in the other mills. The first screen receives 150 tons in 24 hours.

Omitting Mill 28 on account of the smallness of the samples, we see that the best work is done by Mill 22, and the poorest by Mill 30, the work of Mill 38 lying between the two. Looking for the causes, we find that Mill 30 is treating much more ore than the others; it is using tandem trommels (which Mills 20 and 38 do not), a system which overcrowds the earlier screen; and it uses gentle slopes combined with short lengths. Better work probably could have been done in all of the mills if steeper slopes, say 9°, had been used, and with this the long trommels of Mill 22 could have been shortened.

It will be noticed that the percentage of fines in the oversize of fine screens is generally greater than in coarse, the reasons for which are explained in § 290. In Mill 38 one is surprised to see finer stuff in the oversize of the 5-mm. than of the 2.5-mm. screen. This appears to be accounted for by the fact that the former has more grains of about the size of the hole than the latter (25% as against 16% within the size limits 10% above and 10% below the diameters of the holes).

Table 212 shows the results of tests made by Prof. H. A. Wheeler, of St. Louis, on the oversize products of trommels at Iron Mountain, Mo. The tests were made by treating samples of about 8 or 10 pounds on the very screens

from which they were taken, at a time when the mill was idle and therefore the screening could be done accurately.

TABLE 212.—TESTS OF OVERSIZE PRODUCTS OF TROMMELS AT IRON MOUNTAIN, MO.

Oversize of	Larger than the Screen Holes.	Oblong Grains. (a)	Smaller than the Screen Holes.	Slope of Trommel.	Diameter of Trommel. Inches.	Effective Length of Trommel. Inches.	Revolutions per Minute.
¾-inch holes, Number of grains.	33%	36%	31%	1°45′	42	27	25
" " " "	27	30	43	"	42	27	25
" " " "	18	38	44	"	42	27	25
" " " "	37	38	35	"	42	27	25
" " " "	24	37	39	1°35′	36	44	22.5
" " " "	21	37	42	"	36	44	22.5
" " " "	37	28	35	"	36	44	22.5
" " " "	22	33	35	"	36	44	22.5
" " b Weight	56	44		"	36	44	22.5
" " b Number of grains	43	20	38	"	36	44	22.5
" " b Weight	57	43		"	36	44	22.5
" " b Number of grains	41	22	37	"	36	44	22.5
" " b Weight	53	47		"	36	44	22.5
" " b Number of grains	40	20	40	"	36	44	22.5
½-inch " b Weight	43	57		"	36	44	22.5
½-inch " b Number of grains	18	22	60	"	36	44	22.5
" " Weight	25	75		"	36	44	22.5
" " "	35	65		"	36	44	22.5
" " b Weight	28	62		"	36	44	22.5
" " b Number of grains	11	15	74	"	36	44	22.5
" " Number of grains	32	21	47	1°45′	42	33	25
" " " "	38	41	21	"	42	33	25
¼-inch " Weight	32	68		2°50′	30	51.5	20.5
" " b Weight	51	49		"	30	51.5	20.5
" " b Number of grains	29	71		"	30	51.5	20.5
" " Number of grains	27	16	57	"	30	51.5	20.5
⅛-inch " Weight	39	61		2° 5′	36	47	20.5
1/16-inch " Weight	22	78		2° 0′	30	47	19
" " "	19	81		"	30	47	19
" " "	20.6	79.4		"	30	47	19

(a) These are the long, flat grains that could pass through the holes endwise, but not if their major axes were parallel to the screen. (b) The weight and count were made on the same sample.

Bibliography for Sizing Screens and Principles of Screen Sizing.

1. Bilharz, O., (1896), "Mech. Aufbereitung," Vol. I., pp. 41, 56, 70 and 84. A short discussion of grizzlies, riddles and trommels. Illustrated.
2. Davies, E. H., (1894), "Mach. Metal. Mines," p. 267. Short description of grizzlies and trommels, and discussion of the latter. Illustrated.
3. Callon, J., (1886), "Mining," Vol. III., p. 53. Discussion of sieve scale, the arrangement of trommels, and screen material.
4. Gaetzschmann, M. F., (1864), "Aufbereitung," Vol. I., p. 645. Details of the construction, arrangement and adjustments of various forms of riddles and trommels, with discussions of their uses and advantages; and discussion of screen material. Numerous examples from practice, giving dimensions, capacity, water consumption, etc. Illustrated.
5. Goupillière, Haton de la, (1885), "Exploitation des Mines," Vol. II., p. 716. General description of grizzlies and trommels, and arrangement of the latter. Illustrated description of Briart bar screen.
6. Kunhardt, W. B., (1893), "Ore Dressing," p. 8. Discussion of sizing, and of the different forms and arrangements of trommels and riddles.
7. Lamprecht, R., (1888), "Kohlenaufbereitung," p. 17. Fixed and movable grizzly bars, shaking and gyrating riddles, and trommels for coal. Illustrated.
8. Linkenbach, C., (1887), "Aufbereitung der Erze," pp. 7 and 51. Material and construction of grizzlies. Sieve scale. Screen material. Dimensions, arrangement, capacity, power and water for trommels and spiral screens. Illustrated.
9. Louis, H., (1894), "Gold Milling," p. 102. Details and discussion of grizzlies.
10. Rittinger, P. R. von, (1867), "Aufbereitungskunde," p. 222. Discussion of sieve scale and of material for screen surfaces. Page 243. Descriptions and comparisons of

the various fixed screens, riddles and trommels, with their dimensions, mechanisms, adjustments and capacities. Illustrated.
11. Rose, T. K., (1894), "Gold," p. 209. Riddles versus trommels. Punched plate versus wire cloth.

---

12. *Am. Inst. Min. Eng.*, Vol. VI., (1879), p. 476. John C. F. Randolph. Dimensions, speed and capacity of trommels, with the sieve scale, at Clausthal.
13. *Ibid.*, Vol. IX., (1880), p. 447. Ellis Clark, Jr. Sieve scale, dimensions and power for trommels at Przibram, Bohemia.
14. *Ibid.*, Vol. X., (1881), p. 98. A. J. Bowie, Jr. Grizzlies in the Father de Smet mill.
15. *Ibid.*, Vol. XI., (1882), p. 91. W. L. Austin. Grizzlies in the Harshaw mill.
16. *Ibid.*, Vol. XVII., (1889), p. 509. H. O. Hofman. Grizzlies in the Black Hills.
17. *Ibid.*, Vol. XIX., (1890), p. 401. Eckley B. Coxe. Full details of Coxe's finger bar grizzly, oscillating grizzly bars and gyrating screen. Illustrated.
18. *Ann. des Mines*, Series VIII., Vol. XX., (1891), p. 24. Maurice Bellom. Relation of capacity of trommels to diameter and to speed of revolution. Description and discussion of Schmidt spiral sieve.
19. *Berg. u. Hütt. Jahrb.*, Vol. XXIX., (1881), p. 331. Johann Habermann. Various constructions for trommels, materials for screens, and effect of diameter and speed of revolution. Systems of arranging trommels.
20. *Ibid.*, Vol. XXXIV., (1886), p. 139. Johann Habermann. Modification of the Neuerberg trommel, used for fine screening (to 0.75 mm.). Illustrated.
21. *Berg. u. Hütt. Zeit.*, Vol. XXXI., (1872), pp. 101, 117 and 137. Conrad Blömeke. Sieve scale, dimensions, arrangement, adjustment and capacity of trommels at Bad-Ems.
22. *Ibid.*, Vol. XL., (1881), p. 105. C. Blömeke. Capacity and power for riddles, trommels and spiral sieves for coal.
23. *Ibid.*, Vol. XLV., (1886), p. 81. C. Blömeke. Methods of keeping the screen clear on a Schmidt spiral sieve.
24. *Ibid.*, Vol. XLVI., (1887), pp. 97 and 107. Adolph Schmidt-Manderbach. Discussion of the principles and advantages of spiral sieves. Page 351. Certain points in operating spiral sieves; with details of two installations.
25. *Bull. Soc. Ind. Min.*, Series II., Vol XV., (1886), p. 33. Lucien Parent. Discussion of the principles of Karlik oscillating grizzly bars, and of trommels.
26. *Coll. Eng.*, Vol. XII., (1892), p. 124. Greenwell's conveying grate and picking table combined.
27. *Coll. Guard.*, Vol. LX., (1890), p. 177. C. M. Percy. Details of mutually balanced shaking riddles. Illustrated.
28. *Dingler's Polyt. Jour.*, Vol. CCIX., (1873), p. 22. Description of Briart's bar screen. Illustrated.
29. *Engineering*, Vol. LVIII., (1894), p. 263. An end shake riddle in which the shock is taken up by an ingenious arrangement of springs.
30. *Eng. & Min. Jour.*, Vol. XLVIII., (1889), p. 249. Coxe's gyrating screen. Illustrated.
31. *Ibid.*, Vol. LV., (1893), p. 77. William M. Brewer. A perforated spray pipe for the shaft of a trommel.
32. *Ibid.*, Vol. LVIII., (1894), p. 270. Same as *Engineering*, Vol. LVIII., p. 263.
33. *Ibid.*, Vol. LXI., (1896), p. 278. Description of the "vibromotor" screen. Illustrated.
34. *Freiberg's Berg. u. Hüttenwesen:* Freiberg, 1883, p. 168; 1893, p. 193. The number of trommels, riddles and spiral sieves in the Freiberg district in 1883 and 1893.
35. *Inst. Civ. Eng.*, CXVI., (1894), p. 7. Robert E. Commans describes and discusses various forms of fixed and moving grizzly bars, riddles and trommels. Illustrated.
36. *Iron & Steel Inst.* 1892, No. 1, p. 387. Briart's bar screen.
37. *Min. Ind.*, Vol. V., (1896), p. 157. Richard Cremer. Coal screening devices described and compared. Illustrated.
38. *Ibid.*, Vol. VI., (1897), p. 370. Philip Argall says that, after drying, ore screens more rapidly when hot than when cold.
39. *Min. Jour.*, Vol. XLI., (1871), p. 366. E. G. Spilsbury. Purpose of screening. Riddles and trommels compared. Screen material. Trommel speed. Submerged trommels.
40. *Ibid.*, Vol. XLI., (1871), p. 485. John Darlington. Dimensions, speed and sieve scale for trommels at several plants.
41. *North Eng. Inst. Min. & Mech. Eng.*, Vol. XXI., (1871-72), p. 295. Robert Miller describes the Hick revolving grizzly bars for screening coal. Illustrated.
42. *Oest. Zeit.*, Vol. XXXV., (1887), p. 1. E. Ferraris. A riddle bumping against rubber buffers, and with power transmitted through a rubber spring, to overcome jarring. Illustrated.

43. *Ibid.*, Vol. XXXVI., (1888), pp. 508 and 515. Carl von Reytt. Description and capacity of Karlik gyrating screen and comparison with an ordinary riddle.
44. *Ibid.*, Vol. XXXIX., (1891), p. 567. A. Kás. The Karlik and the Klein moving grizzly bars. Illustrated.
45. *Ibid.*, Vol. XLI., (1893), p. 73. A. Kás. The Distl-Susky screw grate. Illustrated.
46. *Ibid.*, Vol. XLIII., (1895), p. 628. V. Waltl. Description of the Oberegger gyrating screens. Illustrated.
47. *Ibid.*, Vol. XLVIII., (1900), p. 229. E. Ferraris. Description of the Ferraris shaking screen. Illustrated.
48. *Sch. Mines Quart.*, Vol. XIV., (1893), p. 234. Translated from *Ann. des Mines*, Series VIII., Vol. XX., (1891), p. 24.
49. *Thon-Ind. Zeit.*, Vol. XVI., (1892), p. 409. Two special forms of riddles. Illustrated.
50. *Zeit. Berg. Hütt. u. Salinenwesen*, Vol. XXXV., (1887), p. 263. The Borgmann and Emde revolving grizzly bars. Illustrated.
51. *Ibid.*, Vol. XLIII., (1895), p. 216. The Karop, the Borgmann & Emde and the improved Briart movable grizzly bars. Illustrated.

CHAPTER XI.

CLASSIFIERS.

§ 294. Definition and Classification.—Classifiers are devices for subjecting sands or slimes to the action of water under free settling conditions, either to obtain a series of products diminishing in size, preparatory to subsequent treatment, or to settle the whole material as completely as possible from the water.

They all have a carrying current, by which is meant a current of water which carries forward whatever grains may remain suspended in it. Some of them have also rising hydraulic, or clear water currents added from below. According to the purpose to be served, the design of the apparatus and the mode of employing the above currents, these appliances may be classed in nine groups, as follows:

(*a*) USING HYDRAULIC WATER.

I. Trough or shallow pocket hydraulic classifiers.
II. Deep pocket hydraulic classifiers.
III. Tubular hydraulic classifiers.

(*b*) NOT USING HYDRAULIC WATER.

IV. Surface current box classifiers.
V. Whole current box classifiers.
VI. Distributing boxes.
VII. Unwatering boxes.
VIII. Settling tanks.
IX. Clarifying reservoirs.

Groups I., II., and III.

§ 295. Principles of Action.—These subject the sands, while being moved forward by the carrying current, to a series of upward hydraulic currents, each of which acts in its own pocket. The effect produced is that grains of sand which are heavy enough to settle against the hydraulic current, may do so and can pass out at an orifice or spigot designed for that purpose, while the lighter ones are lifted and carried forward to the next hydraulic current. A series of these pockets, with their quantities of hydraulic water graduated so as to have less and less upward current, will yield products ranging from the coarse size of the first to the fine size of the last, and the finest grains will be in the overflow from the last pocket.

The tube or orifice up through which the hydraulic water passes will be called the sorting column and its size and shape are of great importance as affecting the quality of the products, as in it the true work of separation takes place.

The use of dial cocks for regulating the quantity of hydraulic water is to be recommended for restoring the conditions after flushing out the spigots, as well as for inspection to see that the mill boys are not deranging the machines. Constant hydraulic water is essential to good work. This may be obtained from a tank or reservoir with constant level. Constant feed water for the carrying

current is likewise essential for good work. A strainer to remove fibre, chips and large, abnormal particles from the feed where fine pulp is treated is an important adjunct. This strainer may often be required for the hydraulic water. This fibre screen should be large enough to run some time without being cleaned, should be arrranged for easy cleaning and should be cleaned at regular intervals.

§ 296. SPIGOTS.—The size of the opening will depend upon the head of water, the quantity of material to be discharged, and the size of the grain. It must be large enough for free flow. The spigot may be a short length of iron pipe, fitted into a perforated wooden plug, and it, in turn, fitted to a nipple screwed into the plank wall of the classifier. This pipe and plug spigot is the simplest of all forms; it retains its size fairly well; it is cheap and instantly replaced by a new one, kept in stock, and the spigot is flushed free from obstructions more easily and completely than with any other form.

Dial cocks are sometimes used for spigots, but they are open to three serious objections: they are costly; they wear out quickly, so that the reading loses its significance; and finally, the spigot is not, in the opinion of the author, the place for an easily and often used adjustment. The spigot should be set once for all, and the adjusting should be done by the hydraulic water.

A nipple, a bit of hose and a pinch cock form a convenient spigot, but the orifice is not circular, so that this form does not run so smoothly as the pipe and plug. It offers the temptation of adjusting the outgoing stream, which is of doubtful benefit, and it is more expensive than the pipe and plug. It has the advantage that it can easily be elevated to discharge at a higher level if desired.

A molasses spigot which has a swing gate, cutting off part of an orifice at the flanged end of a pipe has the disadvantages that it wears rapidly, does not form a round opening, and it introduces the adjustment of the spigot discharge.

A triangle and gate is practically the same as the molasses spigot, except that it uses the sliding gate; and the orifice, whatever may be its size, is always an equilateral triangle.

The rising discharge, or goose neck (see Fig. 254*c*), is a scheme for using a larger pipe for the spigot, since small spigots under high head are liable to choke with fibre unless the water has been through a fine screen. The goose neck discharges the spigot product at a higher level than that at which it leaves the classifier, thereby diminishing the speed of flow and allowing a larger pipe to be used. Owing to the fact that a spigot stream, overcharged with sand, will certainly choke this kind of a spigot, it cannot be used except with very fine sand, and then only by one who thoroughly understands its use. An X below and a T above, both with plugs in them (see Fig. 277*b*), will allow it to be flushed out thoroughly in all parts. It can probably be run with less water than the short pipe and plug spigot, and it saves mill height. It may be made with adjustable column, either as a hose or as an iron pipe turning upon an elbow thread at the bottom.

Linkenbach[15] describes a spigot discharge consisting of a disc with holes of varying diameters arranged concentrically around its center. The disc revolves in front of and close to the end of the discharging pipe. Thus a larger or smaller hole may be rotated into line and the amount of discharge varied accordingly.

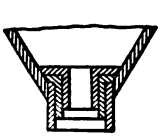

FIG. 233.

In Mill 28 a nest of two removable flanged thimbles, set into the top of the spigot pipe, as shown in Fig. 233, is used in the unwatering boxes. If the smaller does not discharge a sufficient amount, it is removed and the larger then constitutes the spigot. If a still larger opening is desired, the larger thimble may also be removed and the pipe itself forms the spigot.

§ 297. Purpose and Essential Qualities.—Hydraulic classifiers of a great variety of forms are used for handling the products which are, in the judgment of the mill men, too fine to size economically with screens, and the products they yield form a decreasing series differing from those of the screens in that they are not truly sized but sorted products, obeying approximately the various laws of free settling in water given in Chapter XII. The spigot products are in almost every instance treated on jigs. The fine overflow of the last hydraulic treatment is usually sent to the box classifier; then to vanners or tables, or occasionally to jigs; it is often sent directly to these machines.

TABLE 213.—SIZES OF FEED TO HYDRAULIC CLASSIFIERS.

Size of Maximum Grain in Feed.		Number of Mills that have this Size of Feed.	Size of Maximum Grain in Feed.		Number of Mills that have this Size of Feed.
Mm.	Inches.		Mm.	Inches.	
5.0	0.20	1	1.25	0.05	1
4.76	3/16	6	1.22	0.048	1
4.5	0.18	1	0.88	0.035	1
3.3	0.13	2	0.635	0.025	2
3.2	1/8	2	6 mesh.	.....	1
3.0	0.12	10	10 mesh.	.....	3
2.5	0.10	8	12 mesh.	.....	2
2.3	0.09	1	14 mesh.	.....	1
2.0	0.08	4	24 or 30 mesh.	.....	1
1.5	0.06	2	30 mesh.	.....	1

The sizes fed to hydraulic classifiers in the mills are given in Table 213. As shown in Table 213, the size of the maximum grain in the feed material ranges from 5 mm. down to 0.635 mm. That in the final overflow ranges perhaps from 0.50 mm. down to 0.25 mm. (see § 352). Linkenbach recommends 1.5 mm. as the best maximum grain to feed to hydraulic classifiers and 0.25 mm. as the best maximum size of grain in the overflow. For a discussion of the coarser limit of classifier work, the reader is referred to § 286.

The following are the essential qualities of a good hydraulic classifier, which should be borne in mind in designing or studying this form of apparatus: (1) It should, in mill phrase, "be able to stand up" and do good work with little care. (2) The rising current in the sorting column should rise with uniform velocity over all parts of any given horizontal section. (3) It should require little mill height. (4) It should be capable of easy and positive adjustment. (5) It should not require an excess of water which may dilute the pulp too much. (6) It should be capable of being fed and discharged continuously.

I. The Trough or Shallow Pocket Hydraulic Classifiers.

§ 298.—These have a nearly horizontal carrying current which is retarded momentarily over any given sorting column just long enough to allow the proper sands to drop out, and then is passed on to the next. In order to get this moment of retardation, shallow pockets built in the bottom of the trough, may be used, or small dams or riffles may be placed just beyond the sorting columns, or a combination of deflectors over, and dams beyond the sorting columns, or finally, the classifier may be set so nearly horizontal that a layer of sand collects upon the bottom in which shallow pockets form over the sorting columns.

These are adapted for the classification of coarser sizes of sands. They all have more or less the quality of allowing any one spigot to be plugged a few minutes, for example while a jig is being skimmed. In this case the product which should issue from the plugged spigot is carried on to the next without causing the mill work to suffer serious derangement. The various forms will be taken up and described in detail.

§ 299. THE LAKE SUPERIOR HOG TROUGH CLASSIFIER—OLD FORM.—(For new form see Figs. 236*a*-236*c*.)—This is a trough hydraulic classifier consisting of two V troughs, a smaller within a larger, with surfaces parallel and tops on the same level. The carrying current runs the whole length of the inner V trough which has a slight slope for that purpose. The space between the two troughs is used as a pressure box and is usually divided by cross partitions, so that the hydraulic water and therefore the pressure in the pressure box for each of the spigots is kept independent from that of all the others. The upper end of both troughs is headed up water tight, as is also the lower end of the pressure box. The hydraulic water flows from a pipe with a regulating valve into the open top of the pressure box. The several sorting columns consist of longitudinal slots cut in the bottom of the inner trough. These are usually ½ inch wide and increase in length toward the tail end of the classifier. The spigot pipes and plugs are placed adjacent to the slots at one side of the apex of the outer V and discharge their products directly upon the feeding aprons of the jigs. This classifier often has a receiving box at the upper end to take the wear of the feed sand and deliver the stream quietly to its first pocket.

This classifier has been used for treating sand from steam stamps which has been through round holes $\frac{3}{16}$ inch in diameter. This classifier has a serious defect in that it is not a positive apparatus. The increase of hydraulic water does not increase proportionally, and instantly, the pressure in the pressure box, but does so gradually. After adjusting the water one must wait to ascertain the effect of it. Also, if much water is used on the first hydraulic, the sand is liable to bank over the first sorting column until the head has increased in the pressure box enough to burst through and send material to the second slot, where it does not belong, thereby deranging the work. This inability to control hydraulic water tends to send down fine stuff into the earlier spigots and may even send coarse to the overflow. This classifier uses more water than the positive forms. The details of it in the mills, as obtained by the author, are given in Table 214.

TABLE 214.—DETAILS OF LAKE SUPERIOR CLASSIFIER.

Abbreviations—Deg.=degrees; Ft.=feet; Gal.=gallons; In.=inches; Min.=minute; No.=number.

Mill No.	Classifier No.	Number Used.	Number of Spigots in Each.	Length.	Inside Width of Inner Trough.	Depth of Inner Trough.	Angle of the V.	Thickness of Sides of Inner Trough.	Thickness of Sides of Outer Trough.	Length of Each Compartment.	Width of Space between Troughs.	Diameter of Hydraulic Pipe.	Width of Slots.	Length of Slots.	Diameter of Spigots.	Feed.	Products.	Capacity per 24 Hours.	Hydraulic Water Used per Classifier. Gal. per Min.	Hydraulic Water Used per Classifier. Tons per 24 Hours.
				Ft. In.	In.	In.	Deg.	In.	In.	Inches.	In.	In.	In.	In.	In.			Tons.		
45	1	6	3	.....	.....	....	.....	....	....	.....	.....	.....	....	....	....	(*a*)	(*b*)	75	.....	.....
46	1	3	4	15 3	16	12	67	1¼	1½	.....	4¾	....	¼ ⅝ ⅞ 1½ ⅝	9 10 12 14	1¼ 1¼ 1¼ 1¼ 1	(*a*)	(*b*)	58	.....	.....
c	..	..	....	15 0	about 19	24	about 60		....	22, 50 48, 32	about 3	*d*1½	....	....	....	(*a*)	(*e*)	45	60	360

(*a*) Steam stamp stuff 4.76 mm. to 0. (*b*) Spigots to jigs; overflow to slime tables by unwaterer. (*c*) Lake Superior practice from Rolker[24]. (*d*) There are two hydraulic pipes, one for No. 1 spigot, and one for Nos. 2, 3 and 4 spigots. (*e*) Spigots to jigs; overflow to slime table.

The sand treated and the water used in Mills 45 and 46, as given by H. S. Munroe,[26] are shown in Tables 215 and 216 respectively. The ratio of the volume of water to the volume of sand has been calculated by assuming the specific gravity of the ore to be 3.

TABLE 215.—PRODUCTS OF LAKE SUPERIOR CLASSIFIER IN MILL 45.

	Solid Material Delivered per 24 Hours.	Per Cent. Each is of Total.	Water Delivered with Sand per 24 Hours.	Ratio of Volume of Water to Volume of Sand.
	Pounds.		Cubic Feet.	
First spigot	34,560	35.1	2,128.8	11.5
Second spigot	11,304	11.5	2,290.0	36.8
Third spigot	6,984	7.1	1,312.8	35.2
Overflow	45,696	46.3	.....	.....
Total	(a) 98,544	100.0	.....	

(a) This was the capacity of the classifier in 1880. It has since been greatly increased.

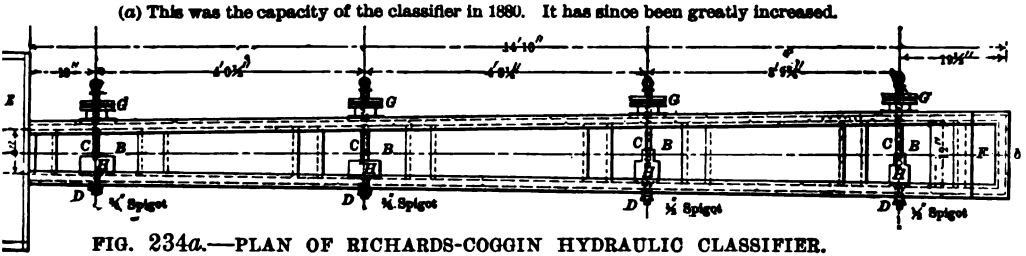

FIG. 234*a*.—PLAN OF RICHARDS-COGGIN HYDRAULIC CLASSIFIER.

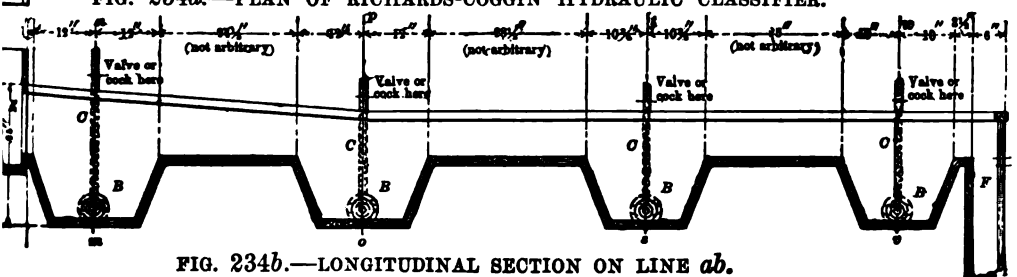

FIG. 234*b*.—LONGITUDINAL SECTION ON LINE *ab*.

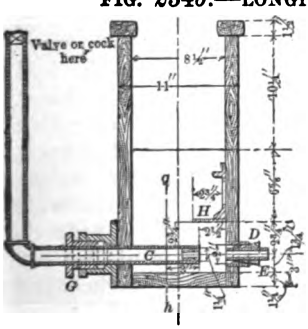

FIG. 234*c*.—SECTION ON LINE *mn*.

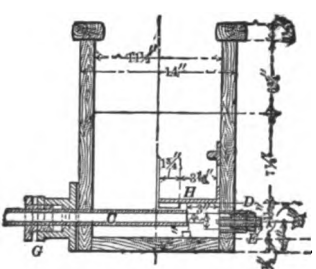

FIG. 234*d*.—SECTION ON LINE *vw*.

TABLE 216.—PRODUCTS OF LAKE SUPERIOR CLASSIFIER IN MILL 46.

	Solid Material Delivered per 24 Hours.	Per Cent. Each is of Total.	Water Delivered with Sand per 24 Hours.	Ratio of Volume of Water to Volume of Sand.
	Pounds.		Cubic Feet.	
First spigot	31,200	23.4	2,028.0	12.2
Second spigot	23,280	17.4	1,240.8	10.0
Third spigot	15,768	11.8	1,329.0	15.8
Fourth spigot	2,712	2.0	864.0	59.7
Overflow	60,552	45.4	18,624.0	57.7
Total	133,512	100.0	.....	.....

§ 300. RICHARDS-COGGIN, OR CALUMET CLASSIFIER.—(See Figs. 234*a*-234*d*.) —This is a sloping trough, gradually widening in its length, in the bottom of

which at intervals, are placed pockets *B*, generally four in number, near the bottom of which the ore is subjected to the action of the hydraulic water. For each pocket the hydraulic pipe *C* and spigot pipe *D* are both horizontal and their axes are in the same line. By decreasing or increasing the hydraulic water, respectively, as much or as little of the sand as is desired will be discharged. In fact the spigot cuts a core from the center of the hydraulic stream, leaving the remainder to form an upward current in the pocket. The greater the amount of the hydraulic water, the less will be the quantity and the heavier the quality of the sand which is able to penetrate the walls of this current and go out of the spigot.

As used at Mill 44, the classifier is made of 1¼-inch planks and is 14 feet, 10 inches long, 8 inches wide at the feed end, widening to 12 inches at the tail end. Its sides are 11¾ inches high at the feed end diminishing to 8¼ inches at the middle of the second pocket and continuing 8¼ inches to the tail. It has four pockets. The length of these are respectively 24, 24, 21½ and 20 inches; the depths are all 11⅛ inches; the length of the bottoms are 15, 15, 13 and 12 inches. The sides of the pockets and of the trough are all vertical. The distances between the pockets are 24½, 28½ and 25 inches. These distances are, however, simply a matter of convenience to suit the position of the jigs. The receiving space *E* is about 3 feet 3 inches long to give time for the particles to arrange themselves. The total length is 18 feet, including 9½ inches for the overflow spout *F* at the end. The hydraulic pipes are 1¼, 1¼, 1, and 1 inch in diameter and formerly entered through a stuffing box *G* on one side, allowing adjustment toward and away from the spigot. The best position having been found by experiment, elbows are now used instead of stuffing boxes. It was found that the hydraulic *C* used too much water in the first two pockets. To correct this, the size of the opening is reduced to ½ inch by a perforated wooden plug which works well. Spigots of the ordinary pipe and plug form are used. At one time ¾, ¾, ½ and ½ inch diameter for the four, were used. Later, ½, ½, ⅜ and ⅜ inch diameter of spigot pipes for the four were found satisfactory. The plugs are in all cases 2 inches in diameter. The spaces between the hydraulic and the spigot pipes are respectively 2½, 2½, 3 and 3 inches for the four. The effect of increasing the distance is to let more sand discharge, of diminishing it is to make the sorting more perfect even to the point where it ceases to be economical. The centers of the hydraulic and spigot pipes are 1¾ inches above the bottom. Adjustable shields *H* of cast iron are attached to the walls just over the spigots to break the upward current and to distribute it near the bottom of the pocket so as to loosen up the sand. The shields of the first and second pockets are flat and are 6 inches wide and extend 2¾ inches from the wall. Those of the third and fourth are arched with 3½ inches span, and 3¼ inches height extending 3½ inches from the wall. The crown of the arch is extended 1¾ inches further and is 1⅞ inches wide.

Sometimes deflectors extending across the width of the trough, are used to force the carrying current down into the pockets and help to keep the sand loose. In Mill 26 this deflector extends to within 6 inches of the bottom of the pocket and is 3 inches beyond the edge of the pocket.

This classifier is used for treating steam stamp stuff crushed through a screen punched with $\frac{3}{16}$-inch (4.76-mm.) round holes, or for the undersize of the last trommel (see Table 217). For the former it treats 60 to 65 tons in 24 hours, using 700 to 800 gallons of hydraulic water per ton of ore, and yielding approximately: No. 1 spigot (¾-inch diameter), 20 tons, coarse-heavy; No. 2 spigot (¾-inch diameter), 12 tons, coarse-light; No. 3 spigot (½-inch diameter), 8 tons, medium; No. 4 spigot (½-inch diameter), 5 tons, fine; overflow, 15 tons, slimes. Its dimensions, as found in the mills, are shown in Table 217.

This is a positive classifier which responds instantly to the hydraulic water. It was designed to take the place of the old Lake Superior hog trough classifier and was the first positive trough classifier used in this country. It also has the advantage that the water from the spigot is discharged under little head, and the classifier uses very little mill height.

TABLE 217.—RICHARDS-COGGIN HYDRAULIC CLASSIFIER.

Abbreviations.—dist. tank.=distributing tank; Ft.=feet; Heb. pr.=Heberli mill product; In.=inches; mm.=millimeters; No.=number; Ov.=overflow; sl. t.=slime table; Sp.=spigots; Stm. stp.=steam stamp; tr.=trommel; Un.=undersize of; van.=vanners; w. crnt.=whole current box.

Mill No.	Classifier No.	Number Used.	Number of Spigots in Each.	Length.	Average Width	Depth of Pocket.	Height of Sides.	Length of Pocket. At Top.	Length of Pocket. At Bottom.	Space between Hydraulic and Spigot.	Diameter of Hydraulic Pipe.	Diameter of Spigot.	Shield over the Spigot.	Slope of Trough. In. per Ft.	Feed.	Products.	Capacity per 24 Hours.
				Ft.	In.	In.	In.	In.	In.	In.	In.	In.					Tons
26	1	1	2	...	...	.....	....	15	8	1	¾	(*a*)	(*b*)	.....	Un. No. 6 tr., 0.9 mm. to 0.	Sp. to jigs. Ov. to van.	.....
32	1	1	5	...	10	(*c*) 10	(*d*)6	14, 14, 18, 18, 18	10, 10, 10, 10, 10	4	.....	1, 1, ¾, ½, ½, ¼	(*e*)	1½	Un. No. 2 tr., 3 mm. to 0.	Sp. to jigs Ov. to No. 1 w. crnt. classifier.	.....
32	2	1	5	...	10	(*c*) 10	6	(*f*)	(*f*)	4	.....	¾, ¾, ½, ½, ½, ¼	(*e*)	1½	Un. No. 4 tr., 2 mm. to 0.	"	.....
35	1	2	4	12	10	24	.....	.....	.....	5	1¼	¾, ⅝, ½, ⅝,	...	.....	Un. No. 4 tr., 3 mm. to 0.	"	.....
35	2	1	3	9	10	24	.....	.....	.....	5	1¼	.....	....	.....	Un. No. 5 tr., 2½ mm. to 0.	"	.....
44	1	44	4	18	10	11⅛	11¾ to 8¼	20 to 24	12 to 15	2½, 2½, 3, 3	1¼, 1¼, 1, 1	½, ½, ⅝, ⅝	....	.....	Stm. stp. stuff, 4.76 mm. to 0.	Sp. to jigs Ov. to sl. t. by No. 1 dist. tank.	60 to 75
44	2	4	3	10	10	11⅛	8¼	.....	.....	.....	.....	½, ½, ¾	....	.....	Heb. pr., 2.5 mm. to 0.	Sp. to jigs Ov. to sl. t.	33

(*a*) Cock on 1¼-inch pipe. (*b*) Six inches long, 5 inches wide, 3 inches above bottom. (*c*) To spigot. (*d*) Depth of layer of water and sand is 4½ inches. (*e*) One and one quarter inches wide. (*f*) Same as preceding.

§ 301. THE EVANS CLASSIFIER.—This is a trough classifier. At Mill 38 (see Figs. 235*a*-235*c*) it is 15 feet 11 inches long with flaring sides. At the head end it is 13 inches wide at the top, 9 inches at the bottom and 16 inches deep; at the tail end, 16¼ inches wide at the top, 13 inches at the bottom and 13 inches deep. The slope is 1° 20′, or about ¼ inch (0.278 exactly) per foot. For the sorting columns it has four round holes *A* 4 inches in diameter, and standing vertically in these holes are the hydraulic pipes *B* bringing the water from above. Upon these pipes are sleeves *C* held at the desired height by thumb screws *D*, and at the bottom of the sleeves are circular horizontal discs *E* 4¼ inches in diameter. By elevating or depressing these discs the area of the annular opening which forms the sorting column can be varied at will. The quantity of hydraulic water also can be varied by a valve *F*. Beneath each hole is a pressure box *G* of cylindrical shape, 4 inches in diameter and 9½ inches deep. In the side of each pressure box, 3¾ inches above the bottom, is a round hole *H* 1½ inches in diameter for the spigot plug. At distances of 6, 7, 8 and 16 inches respectively, beyond the center of each sorting column are cross dams *K* 4, 5, 6 and 10 inches high respectively. There is also a cross dam *L* 3 inches high, 8½ inches before the first sorting column, which makes a dead box to deliver the feed quietly. The sand running through this trough fills all the spaces up to the level of the tops of the dams with permanent solid banks leav-

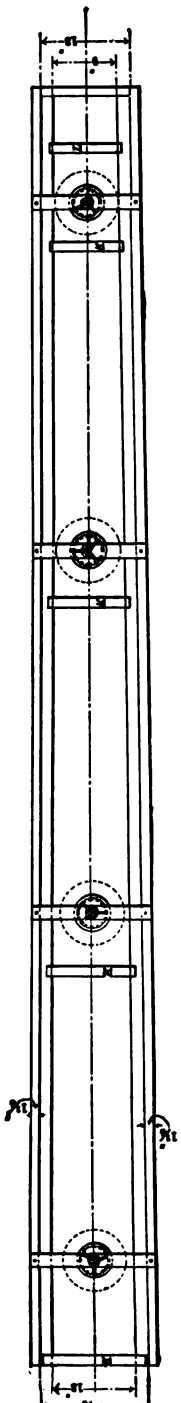

FIG. 235a.—PLAN OF EVANS HYDRAULIC CLASSIFIER.

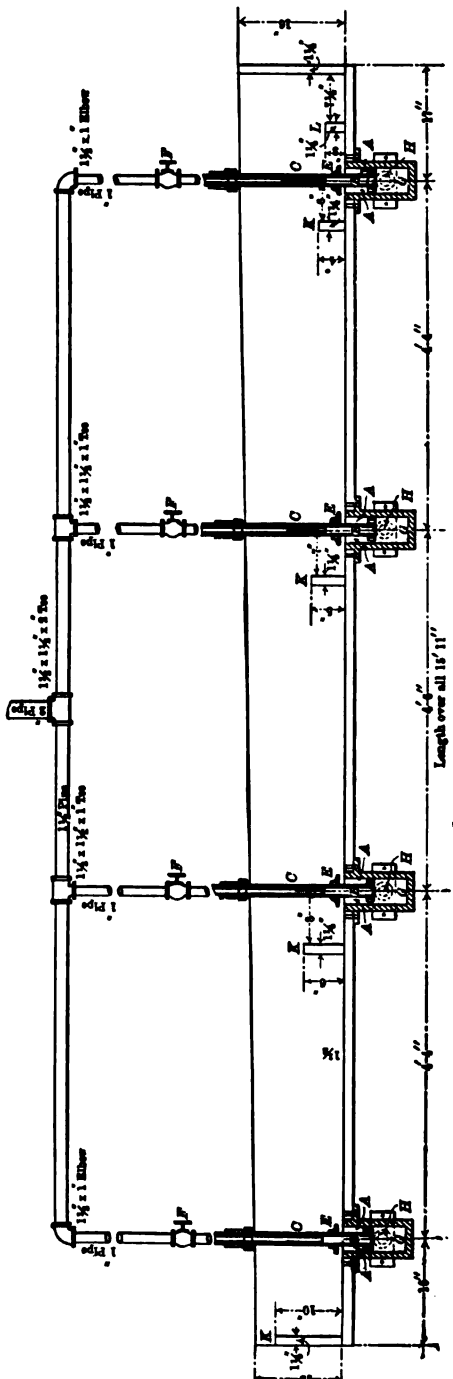

FIG. 235b.—LONGITUDINAL SECTION.

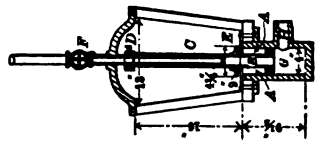

FIG. 235c.—CROSS SECTION.

ing basin-shaped pockets around each hole in which the separation takes place. The slope may be varied either by tilting the whole classifier or by altering the height of the dams so as to increase or decrease the slope as desired. For uses and dimensions as found in the mills, see Table 218.

The capacity at the Atlantic mill of a classifier of presumably about the same size as those in the table, was 66 tons per 24 hours, treating steam stamp stuff passing through 4.76-mm. round hole. The quality of its work was found at Mill 40 to be practically the same as that shown by the sizing test of the Carkeek classifier (see § 315). Sizing tests of the products of the No. 1 hydraulic classifier of Mill 38 are given in Table 256.

TABLE 218.—EVANS HYDRAULIC CLASSIFIER.

Mill No.	Classifier No.	Number Used.	Number of Spigots in Each.	Length.	Width at Head End.	Width at Tail End.	Total Depth.	Depth of Pocket.	Diameter of Pocket.	Diameter of Disc.	Diameter of Hydraulic Pipes.	Diameter of Spigots.	Slope.	Feed.	Products.
				Ft. In.	Inches	Inches	Inches	In.	In.	In.	In.	Inches.			
38	1	2	4	15 11	(a) 13 (b) 9	(a) 16¼ (b) 13	(c) 16 (d) 13	9½	4	4¼	1	½, ⅜, ⅜, ¼	1° 20′	Unwatered undersize of No. 5 trommel, 2½ mm. to 0.	(e)
38	2	2	4	15 11	(a) 13 (b) 9	(a) 16¼ (b) 13	(c) 16 (d) 13	9½	4	4¼	1	½, ⅜, ⅜, ¼	1° 20′	Undersize No. 6 trommel, 2½ mm. to 0.	(e)
38	3	3	.....	.....	.....	.....	.....	.....	.....	.....	.....	.....	.....	Huntington mill stuff, 1½ mm. to 0.	(f)
38	4	3	.....	.....	.....	.....	.....	.....	.....	.....	.....	.....	.....	Undersize No. 8 trommel, 5 mm. to 0.	(f)
40	1	1	4	12 0	12	15	12	.....	.....	4	1	¾, ½, ⅜, ¼	.....	Undersize No. 4 trommel, 3 mm. to 0.	(e)

(a) At top. (b) At bottom. (c) At head end. (d) At tail end. (e) Spigots to jigs; overflow to No. 1 whole current box classifier. (f) Spigots to jigs; overflow to No. 2 whole current box classifier.

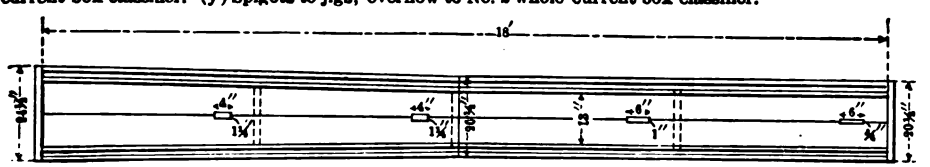

FIG. 236*a*.—PLAN OF ANACONDA HYDRAULIC CLASSIFIER.

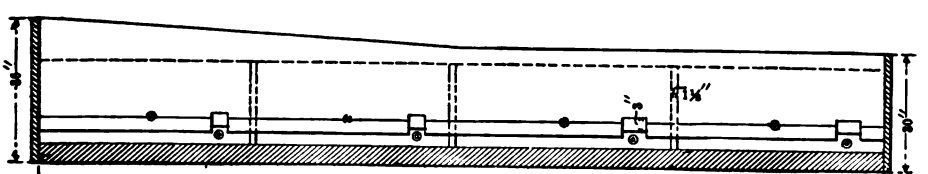

FIG. 236*b*.—LONGITUDINAL SECTION.

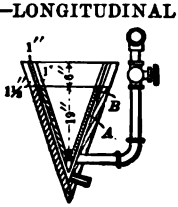

FIG. 236*c*.—CROSS SECTION.

§ 302. THE ANACONDA CLASSIFIER (see Figs. 236*a*-236*c*), is a later improved

form of the Lake Superior classifier (see § 299). The construction is in all respects the same as the latter except that the space *A* between the outer and inner *V* troughs is blocked up air tight at the top, by a strip of plank *B* held by horizontal bolts. The effect of this change is to use the confined air as a cushion and to make the classifier much more nearly a positive classifier than is the old Lake Superior form.

Table 219 gives the practice in the mills. There are a few variations which should be noted: In Mills 33, 36, 42, 43 and 46 the slots are all longitudinal, and the trough has no obstructions in it. In Mills 39 and 41 the bottom of the trough is flat and somewhat wide, the slots run across the bottom, and beyond the slot is a dam or riffle. In Mill 39 the bottom of the trough is 3 inches thick; the dam between the two slots is 10 inches high and that at the lower end is 9 inches high. The dams of Mill 41 are much lower. In Mill 39 the planks of the outer *V* are held together by wooden buckstaves 1½ inches thick and about 7 inches wide. Used as No. 1 classifier in Mill 46 the capacity is 58 tons in 24 hours.

TABLE 219.—ANACONDA HYDRAULIC CLASSIFIER.

Abbreviations.—Ft.=feet; hyd.=hydraulic; In.=inches; J. H.=jig hutches; No.=number; Ov.=overflow of; tr.=trommel; Un.=undersize of.

Mill No.	Classifier No.	Number Used.	Number of Spigots in Each.	Length.	Inside Width of Inner Trough at Top.	Depth of Inner Trough.	Angle of the V.	Slope.	Length of Each Compartment.	Space between Outer and Inner Trough.	Diameter of Hydraulic Pipe.	Length of Slots.	Width of Slots.	Thickness of Inner Trough.	Thickness of Outer Trough.	Diameter of Spigots.	Feed.	Products.
				Ft. In.	In.	In.			Ft. In.	In.	In.	In.	In.	In.	In.	In.		
33	1	2	3	10 6	12	18	36°	1° 30′	.....	1¼	1½ 1¼ 1	..	....	⅞	2	(g)	Un. No. 2 tr., 3.3 mm. to 0. Un. No. 4 tr., 3.3 mm. to 0.	(h) (i)
36	1	2																
39	1	4	2	10 8	c 13½	18	32°	.....	4–10	1	1½	4	½	1½	1½	¾	Un. No. 4 tr., 4½ mm. to 0. Ov. No. 1 hyd. classifier.	(j) (k)
39	2	4																
41	a 1	1	(b)	37 0	d 20 d 17 d 17	12 9½ 9½	(f)	1° 50′	7–6 14–9 14–9	4 3 3	2	6 6 6 6 6 6 6	1¼ 1½ 1¼ 1 ¾ ¾ ¾	..	....	¾	Undersize of No. 4 trommel, 3.2 mm. to 0.	(j)
42	1	44	4	18 0	13	(e)	37°	.....	.....	1	....	4 4 6 6	1¼ 1¼ 1 ¾	1	1½	¾ ¾ ¾ ½	Un. Nos. 1, 3 & 4 tr. and steam stamp stuff, 6.35 mm. to 0.	(k)
42 42 42 42 42	2 3 4 5 6	.... 14	2	.....	13	19	37°	.....	.....	1	....	....	....	1	1½	.....	J. H., 12 mesh to 0 J. H., 14 mesh to 0 J. H., 14 mesh to 0 Un. No. 5 tr., 10 mesh to 0. J. H., 12 mesh to 0	(k)
43	1	4	4	17 0	14	12	60°	1° 35′	.....	.....	....	4 4 3 3 9 10 12 14	1 ¾ ½ ½ ½ ⅝ ⅝ ⅝	..	....	¾ ¾ ½ ½ ½ 1¼ 1¼ 1¼ 1	Steam stamp stuff, 11.1 mm. to 0.	(l)
46	1	2	4	15 3	16	12	67°	.....	.....	4¾	....			1½	1½		Steam stamp stuff, 4.76 mm. to 0.	(m)

(*a*) Nos. 3 and 4 classifiers of this mill do practically the same work as No. 1, and are similar to it except that they have but four spigots each. (*b*) This classifier is made in three divisions and has altogether six slots and eleven spigots. (*c*) 4 inches at bottom. (*d*) 6 inches at bottom. (*e*) 25 inches at head, 19 at tail. (*f*) About 60°. (*g*) Triangle and gate. (*h*) Spigots to jigs; overflow to No. 1 surface current box classifier. (*i*) Nos. 1 and 2 spigots to jigs; No. 3 spigot and overflow to No. 1 surface current box classifier. (*j*) Spigots to jigs; overflow to No. 2 hydraulic classifier. (*k*) Spigots to jigs; overflow to No. 1 whole current box classifier. (*l*) Spigots to jigs; overflow to No. 1 whole current box classifier by No. 1 unwaterer. (*m*) Spigots to jigs; overflow to slime tables by No. 1 distributing tank.

C. W. Goodale,[37] in discussing the losses in jig tailings, has given some sizing tests showing the imperfections of the classifier work (see § 462).

§ 303. THE TAMARACK CLASSIFIER.—This is a hydraulic classifier with vertical or flaring sides, with flat bottom, with pressure boxes below and with slots running across the bottom which are of special construction, so that they can be varied in width.

Table 220 gives the practice in the mills. Special notice should be taken of the slots and the hydraulic pipes. In Mills 46 and 48 (see Figs. 237*a* and 237*b*), there is a rectangular hole *A* several inches wide, running across the

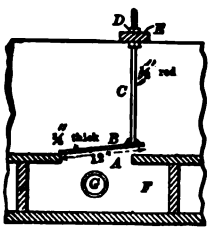

FIG. 237*a*.—PART OF LONGITUDINAL SECTION OF TAMARACK CLASSIFIER.

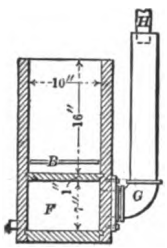

FIG. 237*b*.—CROSS SECTION.

whole width of the classifier. Covering this hole is a plate *B* 12 inches long, 10 inches wide and ¼ inch thick. It is so hinged at the down hill side of the hole that when it is slightly raised, it presents an adjustable slot facing the coming stream and extending the whole width of the classifier. It is adjusted by a vertical rod *C* with a nut *D* which suspends it from a cross bar *E*. In Mill 47 the hole is 7×4 inches and the hinged plate is replaced by two plates, permanently fastened to the bottom, leaving a fixed slot between them.

TABLE 220.—DETAILS OF TAMARACK HYDRAULIC CLASSIFIER.

Abbreviations.—Ft.=feet; In.=inches; mm.=millimeters; Stm. stmp.=Steam stamp.

Mill No.	Classifier No.	Number Used.	No. of Spigots in Each.	Length.	Inside Width at Top.	Inside Width at Bottom.	Depth to Slot.	Depth of Pressure Box.	Length of Slot.	Width of Slot.	Diameter of Spigots.	Thickness of Plank Bottom	Longitudinal Slope.	Slope of Sides from Horizontal.	Feed.	Products.	Capacity per 24 hours.
				Ft. In.	In.	In.	In.	In.	In.	In.	In.	In.		Degrees			Tons.
46	1	7	4	15 3	10	10	16	7	....	....	(*a*) ½	1	.....	Vertical	Stm. stmp. stuff, 4.76 mm. to 0.	(*b*)	68
46	1	6	6	23 0	10	10	16	7	....	....	(*a*) ½	1	.....	Vertical	Stm. stmp. stuff, 4.76 mm. to 0.	(*b*)	85 to 100
47	1	20	4	4 0	14	7	8	5½	7 7 7 7	1 ¾ ⅝ ½	....	2	Level	66	Stm. stmp. stuff, 4.76 mm. to 0, and hutch of cōver jig, 10 mesh to 0.	(*b*)	About 75
48	1	20	4	15 2	10	10	16	7	10 10 10 10	1½ 1¼ ⅞ ½	⅝ ⅝ ½ ½	1	.....	Vertical	Stm. stmp. stuff, 4.76 mm. to 0.	(*b*)	About 75

(*a*) In a 1½-inch plug. (*b*) Spigots to jigs; overflow to slime tables by No. 1 distributing tank.

In Mills 46 and 48, in order to slacken the current and distribute the pressure equally in the pressure box *F*, the hydraulic water is brought in through stand pipes *G* 3 inches in diameter with easy elbows and open tops, which extend above the top of the classifier. The hydraulic water is fed into the top of these stand pipes by hydraulic pipes *H* and is regulated by valves. The heights of the stand pipes above the spigots and the size of the hydraulic pipes are given in Table 221.

TABLE 221.—HEIGHT OF STAND PIPES AND DIAMETER OF HYDRAULIC PIPES OF TAMARACK CLASSIFIER IN MILLS 46 AND 48.

No. of Spigot in a Four-spigot Classifier.	No. of Spigot in a Six-spigot Classifier.	Height of Stand Pipe above Spigot. Feet.	Inches.	Diameter of Hydraulic Pipe. Inches.
1 and 2	1 and 2	2	4	1¼
.....	3 and 4	2	0	1¼
3 and 4	5 and 6	2	0	1

The amount of hydraulic water and sand for the classifier in Mill 48 when treating 72 tons of ore with 93,600 gallons feed water in 24 hours, is shown in Table 222.

TABLE 222.—TAMARACK CLASSIFIER IN MILL 48.

	Hydraulic Water Used per 24 Hours.	Amount of Dry Product Discharged per 24 Hours.
	Gallons.	Tons.
First spigot.....	10,963½	20
Second spigot.....	10,359½	16
Third spigot.....	7,999	10
Fourth spigot.....	5,416	6
Overflow.....	.....	20

§ 304. THE DALTON CLASSIFIER.—(See Figs. 238*a*-238*c*.)—This is a trough classifier and is used in Mill 37 as Nos. 1 and 2 hydraulic classifiers. It has

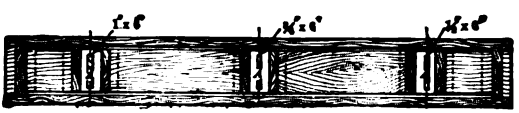

FIG. 238*a*.—PLAN OF THE DALTON CLASSIFIER.

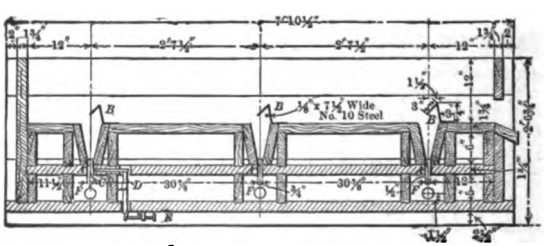

FIG. 238*b*.—LONGITUDINAL SECTION.

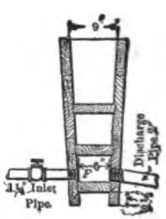

FIG. 238*c*.—CROSS SECTION.

slots *A* for its three sorting columns, which run across the trough and are respectively 6×1 inch, 6×¾ inch and 6×½ inch in section. The figure shows only three sorting columns, but as now used in the mill there are four. The height of column of uniform sectional area is 1¾ inches only, but these columns are extended upward in a wedge form, widening at an angle of 25° to a height of 7¾ inches. To prevent a troublesome bank forming in this pocket the opening at the top is narrowed to 2 inches wide by a piece of plate iron *B* which also furnishes a little dam for holding back the sand from passing too rapidly over any given pocket. The width of each of the slots is adjustable by using a cast-iron block *C* for one side of the opening. The figure shows this block only on the first slot. This block can be moved toward or away from the other side by lever *D* and screw *E*, giving the slot the width desired. Below the slots are the pressure boxes *F*, in the sides of which are the hydraulic and spigot pipes.

In Mill 37 the No. 1 classifier treats the unwatered undersize of No. 6 trommel with 4-mm. round hole, and No. 2 classifier treats the undersize of No. 7 trommel 3-mm. round hole. Both deliver their four spigot products to jigs and their overflows to box classifiers.

§ 305. THE YEATMAN CLASSIFIER.—(See Figs. 239*a*-239*c*.)—This is a trough

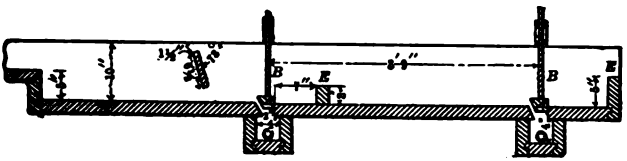

FIG. 239*a*.—LONGITUDINAL SECTION OF THE YEATMAN CLASSIFIER.

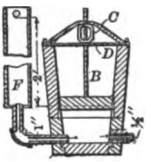

FIG. 239*c*.—CROSS SECTION.

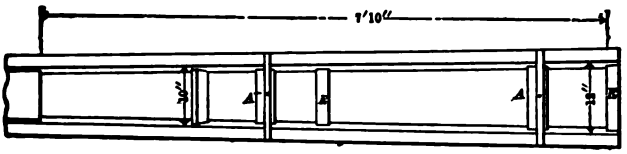

FIG. 239*b*.—PLAN.

classifier with adjustable slots running across the bottom. The width of the slots is varied by a bevelled gate *A* which is elevated and depressed by rod *B*, thumb screw *C* and cross-bar *D*. The sizes of the slots are about 8×¾ inch and 9×½ inch and the height of the sorting column is about 2 inches. The gates being somewhat elevated, serve as dams to prevent grains passing by the pockets too rapidly. Additional dams *E* are put in between the pockets to still

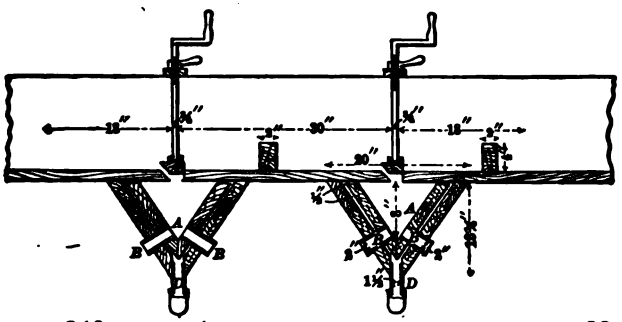

FIG. 240*a*.—NO. 1 HYDRAULIC CLASSIFIER AT MILL 22.

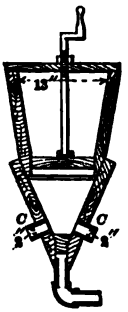

FIG. 240*c*.—CROSS SECTION.

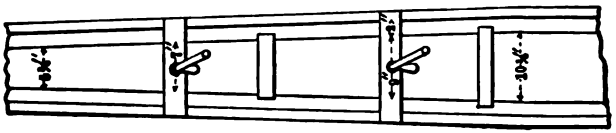

FIG. 240*b*.—PLAN.

further accomplish this result. The hydraulic water comes in through the stand pipe *F* under about 2-feet head.

In Mill 15, No. 1 hydraulic classifier of this pattern treats the undersize of No. 3 trommel, 2.3-mm. round hole, and sends spigot products to jigs and overflow to No. 1 surface current box classifier.

Mill 22 No. 1 hydraulic classifier (see Figs. 240*a*-240*c*), is a modification of the Yeatman classifier in which the pressure box is hopper shaped and the two

end walls of it are double walls with a space between, in which the hydraulic water rises. The heavy sand falls into the inner hopper *A* and passes out through two end spigots *BB*, two side spigots *CC*, or out of all four. These spigots have plugs and nipples in them. This device prevents sand from falling into the hydraulic pipe *D*. The classifier treats the undersize of No. 3 trommel with 3-mm. round holes, and delivers products of the spigots to jigs and overflow to No. 1 surface current box classifier. Sizing tests of the products of this classifier are given in Table 253.

§ 306. Other Hopper-Shaped Shallow Pocket Classifiers.—In Mill 17, hopper-shaped shallow pocket classifiers are used. No. 1 classifier has one hopper-shaped pocket (see Figs. 241*a*, 241*b*). This is fed with the undersize of No. 4 trommel 2 mm. in diameter. The spigot product goes to a jig, the overflow to No. 2 hydraulic classifier. No. 2 hydraulic classifier has two hoppers.

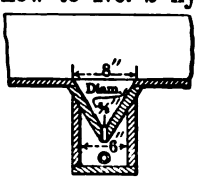

FIG. 241*a*.

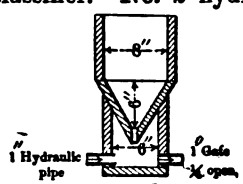

FIG. 241*b*.

FIG. 241*a*.—LONGITUDINAL SECTION OF NO. 1 HYDRAULIC CLASSIFIER IN MILL 17. FIG. 241*b*.—PLAN.

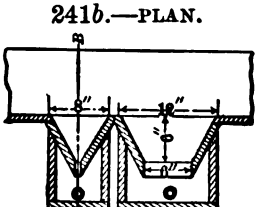

FIG. 242*a*.

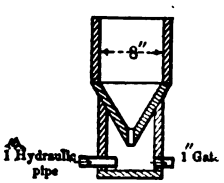

FIG. 242*c*.

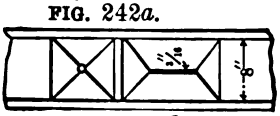

FIG. 242*b*.

FIG. 242*a*.—LONGITUDINAL SECTION OF NO. 2 HYDRAULIC CLASSIFIER IN MILL 17. FIG. 242*b*.—PLAN. FIG. 242*c*.—SECTION *AB*.

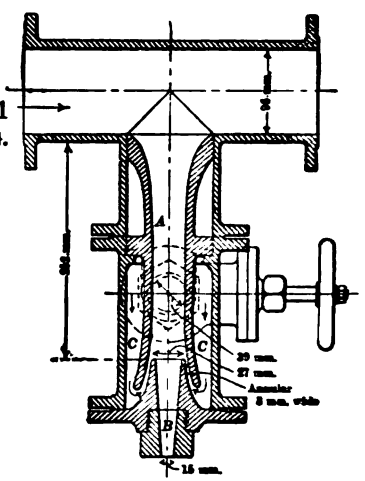

FIG. 243.—SECTION OF THE FERRARIS CLASSIFIER.

One is square, the other oblong, the latter having a slot for its sorting column (see Figs. 242*a*-242*c*). It is fed by overflow of No. 1 hydraulic classifier. The spigots and overflow all go to jigs.

The No. 2 hydraulic classifiers of Mill 48 are shallow pockets with sides drawing together and a T and plug discharge below, placed in the aprons feeding the No. 1 jigs. The material which this treats is the first spigot product of No. 1 hydraulic classifier (4.76 mm. maximum size), and the hydraulic is so regulated as to draw from the spigot a highly concentrated copper product and thereby lighten the work of the No. 1 jigs.

§ 307. The Ferraris Classifier is used at Monteponi, Sardinia. It consists of a pipe 96 mm. inside diameter, 22 meters long. The first 3 meters of length bends by a gentle curve from vertical to horizontal with a fall of about 1.5 m. The remainder is horizontal and straight. Lateral bends would make eddies which would interfere with the working. At intervals, suitable for the jigs and tables, the sorting columns (see Fig. 243), are placed, taking care not

to put any two too close to each other, 1.2 m. center to center being the least distance shown. The sorting column consists of a vertical cylinder *A* flaring at top and bottom, a removable spigot *B* having its hole tapering toward the bottom, with hydraulic water fed into the annular space *C* around the sorting column and brought into contact with the pulp by an annular opening below. It is fed with the undersize of a 5-mm. screen and delivers eight spigot products to six jigs and two bump tables, the overflow going to a settling tank outside the mill. It receives 240 liters of pulp per minute, containing not over 17.5% of solid material which is the maximum per cent. the tube will carry without choking. The first pocket uses 60 liters hydraulic water per minute, of which 40 go down and out, while 20 rise, lifting grains of 2 mm. diameter. The last pocket uses 15 liters hydraulic water, of which 12 go down and 3 go up, lifting grains of 0.1 mm. diameter. The others are graded between the two. The spigots range from 16 mm. diameter for the first products to 8 mm. diameter for the last. The total hydraulic water is 300 liters per minute. The advantages claimed are compactness and the ease and small cost of replacing the wearing parts.

§ 308. THE RICHARDS SHALLOW POCKET HYDRAULIC CLASSIFIER, designed by the author, consists of a rectangular trough *e* (see Figs. 244*a*-244*c*), with pockets *b* in the bottom and adjustable gates *c* dipping into them to check the heavier grains over each sorting column *d* in series. The sorting columns consist of vertical iron pipes *d* of a height sufficient for clean work—about three times their diameter. Screwed to these pipes are vortex fittings *f*, giving a whirling motion to the hydraulic water admitted at *h*, and pipe and plug spigots *g*, to discharge the products. These hydraulic appliances, shown in section in Figs. 244*d* and 244*e*, require fins *w* and *x* to arrest the whirling motion below the vortex *f* and at the top of the pipes *d*, respectively. The top fins *x* are needed only when sorting fine grains.

The sorting columns *d*, are furnished with rotation to give helical paths to the ascending water currents, which abolish any tendency toward downward currents at one side, carrying light grains into the spigot product or strong upward currents on the other side, lifting over grains which should be allowed to settle. If any difficulty is found from too light grains descending in the idle center of *d*, the difficulty is overcome by suspending a core in this space. Otherwise the core is not used. The diameter of the sorting column must be large enough to let the grains, destined for the spigot, pass down without having too large a percentage of sand over water in the column at any given time.

Since data upon the complete study of the action of classifiers used in the mills are not at hand at this writing, the author will enter at some length upon computations in regard to this classifier. The laws and proportions deduced will be, in the main, true of all classifiers. The quantities and sizes are true to the best of the author's belief, although they have not been proved by experiment in all cases.

The basis on which the computations are made is: (1) That an ore of 3.00 specific gravity with a gangue of quartz, specific gravity 2.64, is being treated; for example, an ore carrying 74.5% of quartz and 25.5% of pyrite, specific gravity 5.0, would have a specific gravity of 3.00; (2) that one volume of sand will everywhere need at least ten volumes of water to carry it in the trough, in the sorting columns and in the spigots, this figure being based on the ratio shown by Munroe in Tables 215 and 216 of Lake Superior hog trough classifier; (3) that sufficiently universal for adoption are McDermott's figures on the capacity and yield in tons, of a Calumet classifier, treating material that has passed through a $\frac{3}{16}$-inch (4.765-mm.) diameter round hole, at the rate of 60 tons in 24 hours, and having an overflow with 0.01 inch (0.254 mm.) maximum diame-

ter of grain, and spigot products ranging in geometrical progression as to diameters between these values, and yielding 20 tons, 12 tons, 8 tons and 5 tons respectively, for the four spigot products and 15 tons for the overflow; (4) that an

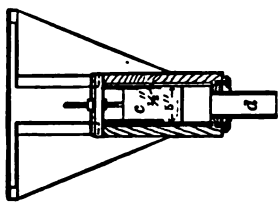

FIG. 244c.—CROSS SECTION ON *AB*.

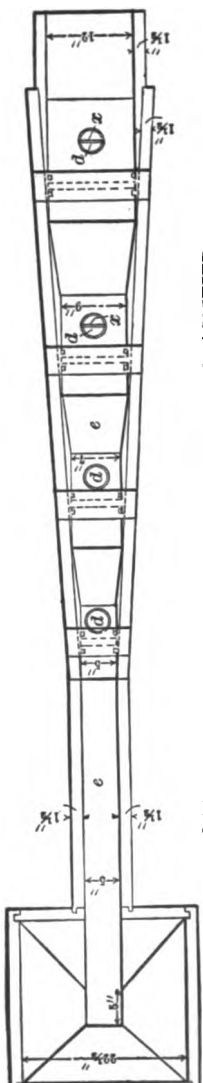

FIG. 244a.—PLAN OF RICHARDS HYDRAULIC CLASSIFIER.

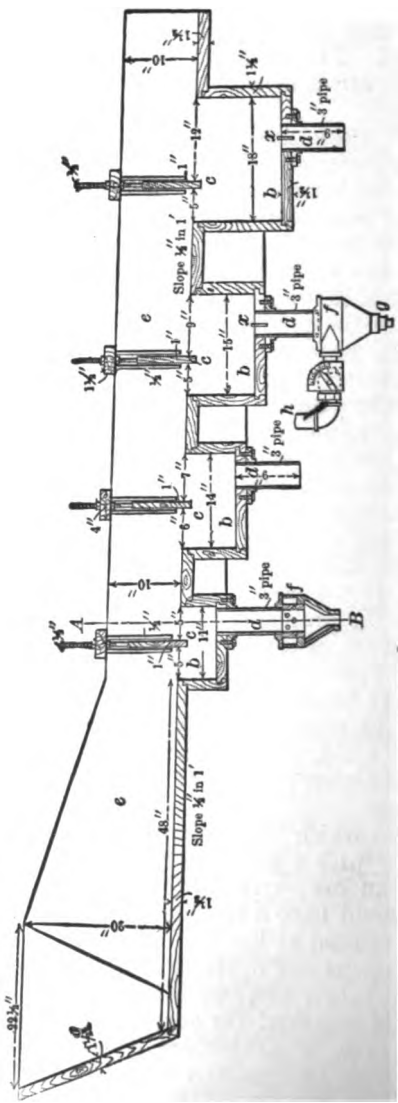

FIG. 244b.—LONGITUDINAL SECTION.

area of 4.783 square inches or 3,087 sq. mm. (inside section of a 2½-inch pipe), is sufficient for all the four sorting columns of the average vertical current classifier used in the mills to treat the above amount. This last figure is based upon: Mill 39, No. 1 sorting column, 4×½ inch or 2 square inches; Mill 40, No. 1 sorting column, 4×¾ inch or 3 square inches; Mill 42, No. 1 sorting column, 4×1¼ inches or 5 square inches; Mill 43, No. 1 sorting column, 4×1 inch or 4 square inches; Mill 46, No. 1 sorting column, 9×½ inch or 4.5 square inches; Mill 47, No. 1 sorting column, 7×1 inch or 7 square inches. In regard to the sizes of the second, third and fourth sorting columns of the above six mills, three have the areas in a decreasing series, one has the same size for all columns, the other two are slightly irregular, but average up about the same throughout. For reasons which will be given later, the author has adopted the same area throughout for all his sorting columns. Owing to the fact that the helical path is longer than the direct path and the sorting column itself is longer than

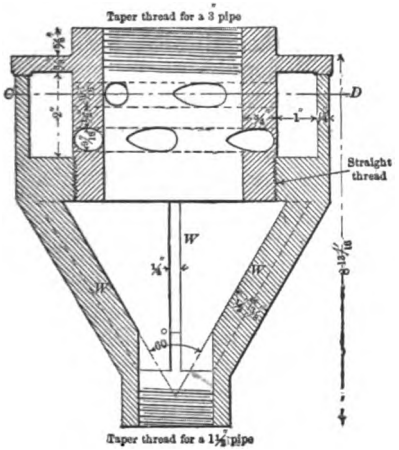

FIG. 244*d*.—VERTICAL SECTION OF VORTEX.

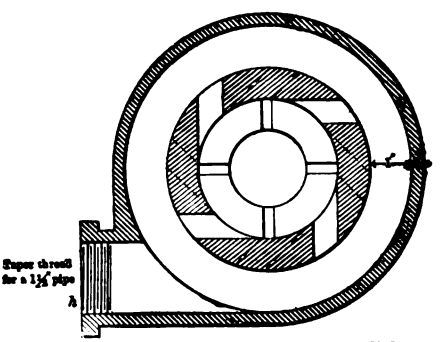

FIG. 244*e*.—CROSS SECTION ON *CD*.

those of the above vertical current classifiers, a 3-inch pipe (sectional area 7.388 square inches or 4,766.5 sq. mm.), and vortex is assumed to be needed in this classifier instead of a 2½-inch pipe. An ore with lighter specific gravity than 3.00 (that of the assumed ore), will have more volume and will require an increase in sectional area of the sorting columns in inverse ratio to the specific gravity or else the capacity of the classifier in tons will have to be reduced directly as the specific gravity.

Using the above facts and the average velocities of settling of quartz computed from Table 262, Table 223 has been calculated. Two columns for the amount

TABLE 223.—MEASURES OF A FOUR SPIGOT HYDRAULIC CLASSIFIER WITH SORTING COLUMNS OF 3-INCH PIPE.

Product.	Range of the Diameters of the Quartz Grains in the Product.	Direction of Movement of Grains.	Amount of Product per 24 Hours.	Rising Velocity of Water in Sorting Column per Second.	Velocity of Settling of Largest Grain of Quartz per Second in the Sorting Column.	Amount of Rising Water per Minute. Neglecting the Sand in Sorting Column.	Amount of Rising Water per Minute. Allowing for Sand in Sorting Column.	Amount of Product per Minute.	Amount of Water from Spigots per Minute.
	Mm.		Tons.	Mm.	Mm.	Kilos.	Kilos.	Kilos.	Kilos.
First spigot...	4.765 to 2.289	Fall.	20	218	236	62.35	54.57	12.63	42.10
Second spigot.	2.289 to 1.100	Fall.	12	104	114	29.74	25.13	7.58	25.27
Third spigot...	1.100 to 0.529	Fall.	8	57	47	16.30	12.22	5.05	16.83
Fourth spigot.	0.529 to 0.254	Fall.	5	26	31	7.43	5.67	3.16	10.53
Overflow	0.254 to 0.000	Rise.	15	.....	.....	.....	.....	9.47	.....

of rising water are given. The first makes no allowance for the volume of sand in the water of the sorting columns. In the second the volume occupied by the sand has been computed assuming that the mean velocity of the falling grains in the sorting column is half that of the fastest grain.

With the adjustments indicated in the table, and taking into account the volume of the sand in the sorting columns, the quantities will be as follows: Ore treated per minute, 37.88 kilos (60 tons in 24 hours); feed water per minute, 126.27 kilos; rising water per minute, 97.59 kilos; spigot water per minute, 94.73 kilos; total water per minute, 318.59 kilos; amount of water per kilo of ore, 8.410 kilos; carrying current of water reaching first sorting column per minute, 126.27 kilos; carrying current of water reaching second sorting column per minute, 180.84 kilos; carrying current of water reaching third sorting column per minute, 205.97 kilos; carrying current of water reaching fourth sorting column per minute, 218.19 kilos; carrying current of water reaching overflow per minute, 223.86 kilos.

§ 309. In regard to the sizes of the spigot pipes, theoretically, the diameter of the spigots to discharge any given amount will depend upon the head of water. The column of water pressing at the aperture of this classifier, will be about 20 inches high and will, theoretically, deliver water at a velocity of 10.3 feet per second. Using a coefficient of efflux of 0.75* we have a velocity of 7.725 feet (2,354 mm.) per second. Computing the areas of spigots which will discharge the volumes, including weight of water, plus weight of ore in Table 223, we find that the diameters of pipe must be: 20.4 mm. for first spigot (about $\frac{13}{16}$ inch); 15.8 mm. for second spigot (about $\frac{5}{8}$ inch); 12.9 mm. for third spigot (about $\frac{1}{2}$ inch); 10.2 mm. for fourth spigot (about $\frac{13}{32}$ inch). Since the assumption of ten volumes of water to one volume of ore is a liberal allowance, it follows that a temporary increase in sand can be carried for two reasons: First, because the spigot can discharge more sand in proportion to the water, and second, the water so crowded out of the spigot, rises in the sorting column and causes the sorting to be more cleanly done. In case of an extraordinary flooding of the classifier with sand, the plug can be momentarily withdrawn, as is done with all classifiers having pipe and plug spigots of this class.

The above spigot pipes conform nearly to those that are used in practice, as shown in Table 224, only they are graded exactly, according to demand, and to save water instead of being made according to pipe sizes. In every case the diameter of the spigot in order that the grains shall not stick should be at least three times the diameter of the maximum grain that it has to discharge. In most instances the diameters will have to be larger than that, to be able to discharge the required quantity.

TABLE 224.—DIAMETERS OF SPIGOTS IN SOME OF THE MILLS.

Mill No.	Diameter of First Spigot.	Diameter of Second Spigot.	Diameter of Third Spigot.	Diameter of Fourth Spigot.
	Inches.	Inches.	Inches.	Inches.
39	$\frac{3}{4}$	$\frac{3}{4}$	$\frac{3}{4}$	$\frac{3}{4}$
40	$\frac{3}{4}$	$\frac{5}{8}$	$\frac{5}{8}$	$\frac{5}{8}$
42	$\frac{3}{4}$	$\frac{5}{8}$	$\frac{5}{8}$	$\frac{5}{8}$
43	$\frac{3}{4}$	$\frac{5}{8}$	$\frac{1}{2}$	$\frac{1}{2}$
44	$\frac{1}{2}$	$\frac{1}{2}$	$\frac{1}{2}$	$\frac{1}{2}$
	$\frac{3}{4}$	$\frac{1}{2}$	$\frac{1}{2}$	$\frac{1}{2}$
	$\frac{3}{4}$	$\frac{1}{2}$	$\frac{1}{2}$	$\frac{1}{2}$
48	$\frac{3}{4}$	$\frac{1}{2}$	$\frac{1}{2}$	$\frac{1}{2}$

Referring to Table 223, it will be seen that while the last spigot only discharges $\frac{1}{4}$ as much sand as the first, the rate of settling of this last product is about $\frac{1}{8}$ that of the first product. It follows that with sorting columns of the same area, the pulp in the last column will have to be about twice as thick as

* Trautwine, "Civ. Eng. Pocketbook."

that in the first column. It does not, therefore, seem wise to diminish the areas of the later sorting columns and thus require the pulp to be thicker still.

For comparison with the 3-inch pipe for sorting column which is adopted in the above discussion, Table 225 has been computed to show what the yield would be if smaller or larger pipes were used for the sorting columns. The mill work on other classifiers together with laboratory tests on small sizes of this classifier indicate that these figures can be reached. The classifier, however, to

TABLE 225.—ESTIMATED CAPACITIES OF THE RICHARDS CLASSIFIER WITH DIFFERENT SIZES OF SORTING COLUMNS.

Designation of Product.	Diameter of Maximum Grain of Quartz in Product. Mm.	Diameter of Sorting Columns, in Inches.							
		1	1¼	1½	2	2½	3	3½	4
		Products Yielded per 24 Hours, in Tons.							
First spigot	4.765	2.33	4.05	5.52	9.09	13.0	20	26.8	34.5
Second spigot	2.299	1.40	2.43	3.31	5.45	7.77	12	16.1	20.7
Third spigot	1.100	0.93	1.62	2.21	3.63	5.18	8	10.7	13.8
Fourth spigot	0.529	0.58	1.01	1.38	2.27	3.24	5	6.70	8.62
Overflow	0.254	1.75	3.04	4.14	6.81	9.72	15	20.1	25.9
Total	.....	6.99	12.15	16.56	27.25	38.91	60	80.4	103.52

do these amounts has to sacrifice the quality of the work. For example tests have been made on some limonite tailings from Mill 5. These were almost all below 1.5 mm. in size and almost all of the fines had been removed so that the feed contained less than 10% below 0.159 mm. Estimating from Table 225 it seems that a 1½-inch sorting column ought to treat this stuff at the rate of perhaps 5 tons in 24 hours. Table 226 gives the quality of the work for different rates of feed and shows how the quality improves with the slower rates of feed. The one current tubular classifier in this table is taken as standard of very nearly perfect work. In no case was there anything in the spigot product below 0.159 mm.

TABLE 226.—RESULTS OF CLASSIFYING LIMONITE ORE.

	Richards' Classifier with 1½-inch Sorting Column.				A One-Current Tubular Classifier.
Rate of feed in tons per 24 hours	1.06	2.11	3.17	6.34	.....
Analysis of feed in per cent. iron	40.28	40.28	40.28	40.28	40.28
Amount of spigot product in per cent	26	35	32	37.5	39
Analysis of spigot in per cent. iron	48.48	47.63	48.26	46.95	48.21
Per cent. of spigot through 0.371 on 0.270 mm.	0.9	0.9	0.6	4.1	0.5
Per cent. of spigot through 0.270 on 0.159 mm.	0	0	0	1.2	0

For use in this work, Table 227 has been computed to show the dimensions in millimeters of various sizes of iron pipe.

TABLE 227.—IRON PIPE.

Trade Size of Pipe.	Inside Diameter.		Inside Area.	Outside Diameter.		Outside Area.	Velocity per Second due to 1 Kilo of Water per Minute.
Inches.	Inches.	Mm.	Sq. Mm.	Inches.	Mm.	Sq. Mm.	Mm.
⅛	0.270	6.858	36.95	0.405	10.29	83.16	451.0
¼	0.364	9.146	65.69	0.540	13.72	147.8	253.7
⅜	0.494	12.55	123.72	0.675	17.15	231.0	134.7
½	0.623	16.055	194.65	0.840	21.34	357.7	85.6
¾	0.824	20.935	344.25	1.050	26.67	558.6	48.4
1	1.048	26.63	556.62	1.315	33.405	876.4	29.9
1¼	1.380	35.055	965.4	1.660	42.17	1,396.7	17.3
1½	1.610	40.92	1,315.4	1.900	48.265	1,829.6	12.7
2	2.067	52.505	2,165.5	2.375	60.33	2,858.6	7.7
2½	2.468	62.69	3,087.2	2.875	73.04	4,190.0	5.4
3	3.067	77.90	4,766.5	3.500	88.90	6,207.2	3.5
3½	3.548	90.12	6,380.5	4.000	101.60	8,113.5	2.6
4	4.026	102.27	8,215.5	4.500	114.33	10,264.6	2.0

In regard to the proportions of the pockets in the trough, the depth, the width and the space between the gate and dam should all be not less than twice the diameter of the sorting column. The gate should dip at least one inch below the level of the top of the dam to prevent coarse stuff from passing over. The area between the gate and the dam is preferably square and its size is calculated so that the carrying current plus the hydraulic water will have a velocity about equal to the rising velocity of the water in the sorting column. For example the second pocket has a carrying current coming to it of 180.84 kilos per minute and a hydraulic current of 25.13 kilos, total 205.97 kilos. To give this a velocity of 104 mm. per second (the velocity in the second sorting column) it must have an area of cross section of $\frac{205.97 \times 1{,}000{,}000}{104 \times 60}$ or 33,008 square mm., which corresponds to a square of 182 mm. or about 7 inches. This rule would give the third and fourth pockets such great size and lose so much head that less dimensions are used. Precedent for this is found in the classifiers in use in the mills. The area between the gate and the entering side of the pocket should increase from the first to the last pocket somewhat faster than the volume of the carrying current increases. The slope of the troughs between pockets should be ½ inch per foot. This will also be sufficient for the feed-sole except where the ore is heavy or coarse in which case a greater slope, even up to 3 inches, may have to be used, or else the quantity of carrying current will have to be increased beyond the ratio of 10:1. The capacity of the classifier decreases in proportion to the size of the feed. Thus if the stuff was 2.289 mm. maximum size, then the capacity of a classifier with 3-inch sorting columns would be reduced by 20 tons (the amount of the first spigot product in Table 225), leaving a capacity of only 40 tons.

Table 228 shows a sizing test of Newfoundland chromite ore with serpentine gangue, crushed by rolls through 20 mesh and sorted in small Richards hydraulic classifier with three spigots. This classifier probably did as good work as can

TABLE 228.—SIZING TEST ON PRODUCTS OF RICHARDS HYDRAULIC CLASSIFIER.

	Feed.	First Spigot.	Second Spigot.	Third Spigot.	Overflow.
	%	%	%	%	%
On 20 mesh (*a*)	0.41	0.0	0.0	0.0	0.0
Through 20 on 30 mesh	20.55	13.55	7.21	0.07	0.02
Through 30 on 40 mesh	14.84	6.42	8.02	0.26	0.05
Through 40 on 50 mesh	12.39	3.73	9.51	0.64	0.07
Through 50 on 60 mesh	9.87	1.36	7.33	1.19	0.19
Through 60 on 80 mesh	9.05	0.68	3.87	2.09	0.07
Through 80 on 100 mesh	10.03	0.26	3.30	5.10	0.59
Through 100 on 120 mesh	8.59		0.32	1.42	0.10
Through 120 on 140 mesh	4.08	0.10	0.73	6.52	0.05
Through 140 mesh	15.25				15.01
Total	100.06	26.10	40.29	17.29	16.09
		99.77			

(*a*) For actual sizes of holes in these sieves see Table 258.

be expected of a commercial classifier. The average grain of the first spigot is 30 mesh, that of the second is between 40 and 50 mesh, that of the third is between 80 and 100, and that of the overflow finer than 140 mesh.

Figs. 244*f* to 244*h* show an annular form of the Richards classifier which is used to treat all the limonite tailings in Mill 5. During a particular run of seven days it treated 51.5 tons per 24 hours of stuff which had not over 5% larger than 1.5 mm. and less than 10% smaller than 0.159 mm. The feed contained 42.08% iron, the spigot product or concentrates which amounted to 26.19 tons per 24 hours contained 45.56% iron and the tailings contained 38.47% iron (see also Table 226, giving results of laboratory tests on another batch of

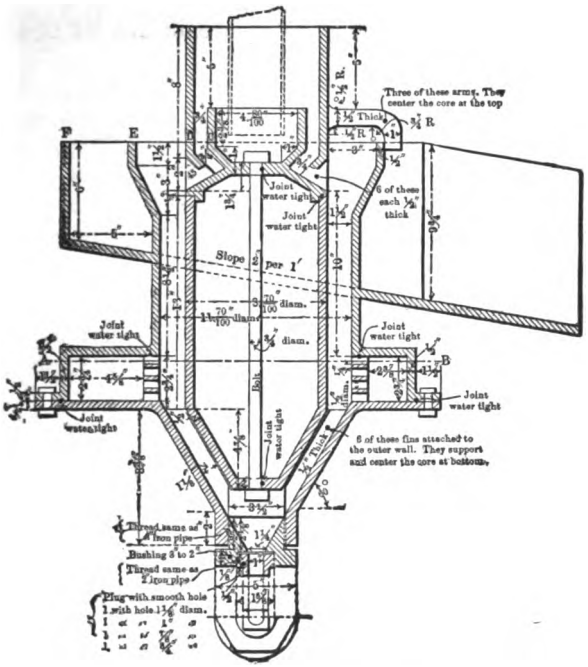

FIG. 244*f*.—VERTICAL SECTION OF RICHARDS ANNULAR CLASSIFIER USED IN MILL 5.

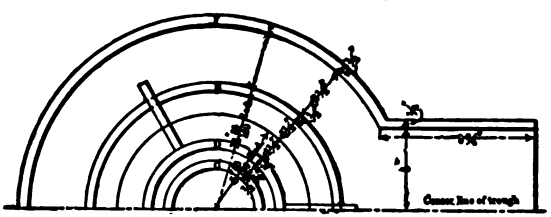

FIG. 244*g*.—HALF PLAN SHOWING TOP OF CORE AND CIRCULAR OVERFLOW TROUGH.

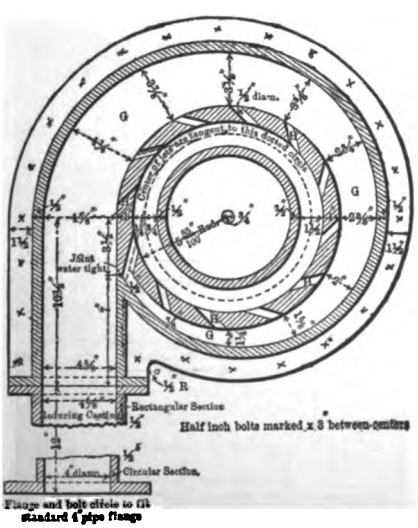

FIG. 244*h*.—SECTION *AB*.

the same stuff). The special advantage of this form is its compactness, the area of its annular sorting column being 48 square inches, or equivalent to seven

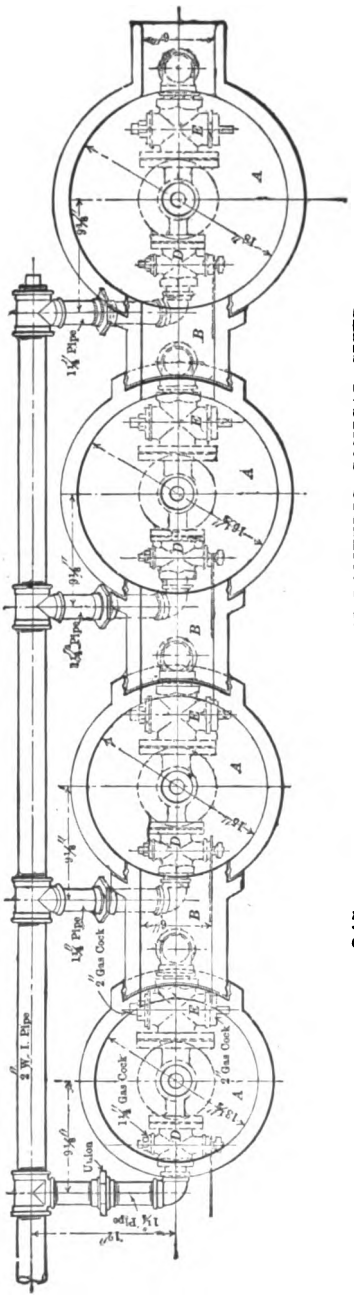

FIG. 245*a*.—PLAN OF BROWNE HYDROMETRIC CONICAL SIZER.

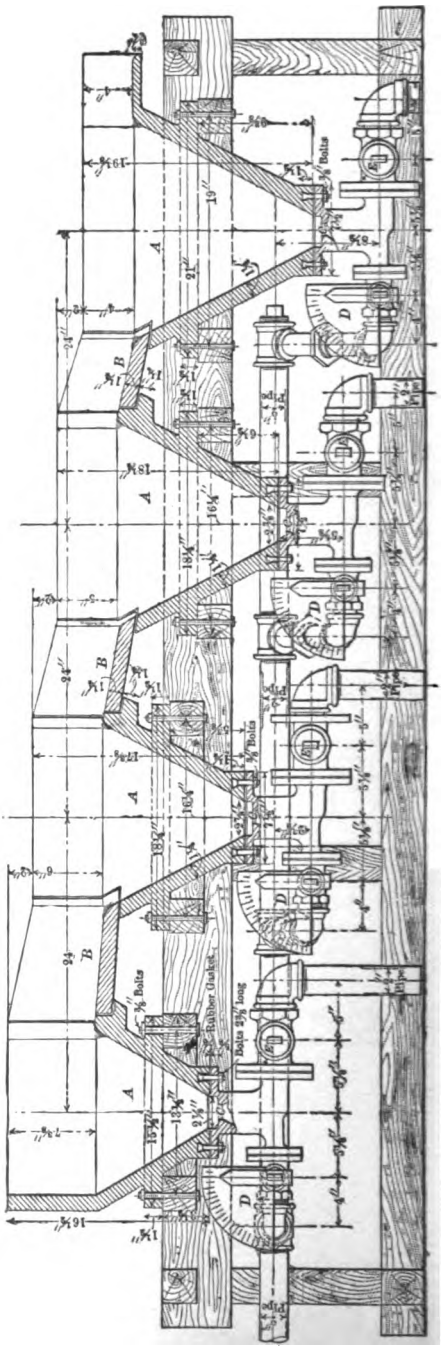

FIG. 245*b*.—VERTICAL SECTION.

3-inch pipes. Another notable feature is the spiral-shaped vortex *G* which gives the same velocity in all the jets *H*.

II. The Deep Pocket Hydraulic Classifiers.

§ 310. General.—These are used in many instances to do the same work as the shallow pocket classifiers, but as a rule, the stuff fed to them is finer, and the pockets are of considerably larger size and connected by troughs or launders. The pockets are graded in series, the earlier being smaller, the later larger. In them the volume of the pocket is so large in comparison with the section of the carrying current in the connecting launder, that the opportunity for retardation is enormously increased, probably far beyond the necessities of the case. They are made in a variety of forms. They may be cones of plate iron, cast iron, or vitrified clay, V boxes, rectangular boxes, or hopper-shaped boxes (pointed boxes), all of wood. In them, moderately fine material is subjected to the action of a hydraulic current, the province of which is to prevent the fine slime from entering the earlier spigots. These appliances are none of them really satisfactory in their action. There is a fundamental difficulty in their way which prevents good work, which depends upon the fact that the hydraulic current, after rising through the sorting column, enlarges rapidly in area and hence decreases in velocity. If they are run on Rittinger's *spitzkasten* principle, that is, fed with a horizontal current on the basis that the heavier grains will settle out and the lighter grains overflow, a body of material will report at the sorting column below, made up of two classes of grains, those that are heavy enough to face the hydraulic current, and those that are not. The former will descend and go out at the spigot as they should; the latter will fail to go out, but since these are heavy enough to settle in the box, but not heavy enough to go out, they will collect until a considerable bank forms which will either have a convulsion and go down in a mass into the spigot, where it does not belong, or it will stay and paralyze the work of the apparatus. Either is bad.

The usual way of overcoming this unfortunate condition of things is to give up the Rittinger horizontal current and use instead a plunging current, which continually descends to the bottom, breaks up the bank and keeps the whole pulp continually stirred up. The grains which would naturally form the bank are forced to rise and go over into the next compartment. But this advantage is gained at the expense of poorly cleaned spigot products, some fines being carried down by the plunging current.

§ 311. Browne Hydrometric Conical Sizer.—(See Figs. 245*a* and 245*b*.)—This is a classifier in which the carrying current is allowed to fall nearly vertically into the first of a series of four cones *A* connected by short launders or troughs *B*. It then passes in succession over the second, the third and the fourth cone. The sorting columns *C* are at the apices of the cones and are short, vertical pipes up through which the hydraulic water passes. For each cone one dial cock *D* furnishes a graduated quantity of hydraulic water, and a second cock *E* regulates the quantity of water to be let out with the sand through the

TABLE 229.—DIMENSIONS OF BROWNE SIZER.

Number of Cone.	Diameter at Top.	Diameter at Bottom	Height.	Diameter of Hydraulic Pipe.	Diameter of Spigot Pipe.	Diameter of Sorting Column.	Height of Sorting Column.	Height of Vertical Sides on Cone.	Length of Launder to Next Cone.	Drop to Next Cone
	In.	In.	In.	In.	In.	In.	In.	Inches	Inches	In.
First	13½	2⅞	9½	1¼	2	1⅛	½	7⅜	9¾	⅝
Second	15	2⅞	11⅝	1¼	2	1⅛	½	6	8¼	1⅛
Third	16½	2⅞	13⅛	1¼	2	1⅛	½	5	6¾	1⅛
Fourth	18	2⅞	15	1¼	2	1⅛	½	4	.....	....

spigot. These three parts are connected by tee fittings. The dimensions of the apparatus are given in Table 229.

The cones and connecting launders are made of vitrified clay 1¼ inches thick. The sorting columns, tees, spigots, and hydraulic pipes are all of iron. No deflectors are used. The overflows of the last three cones are on the same levels as their feeds. The whole fall from the top margin of the first cone to the outlet of the fourth spigot is 2 feet 9½ inches.

This classifier is designed for pulp passing through a 30-mesh screen, and it should not be required to deliver its finest spigot with maximum grain finer than 100 mesh. It is claimed that it does its best work in preparing pulp for Frue vanners. On the other hand, mill men do not favor using classifiers before vanners, on account of the dilution of the pulp, and of the fact that they introduce a serious element of uncertainty into the rate of feeding.

The manufacturers recommend one set of cones for 10 stamps, to treat 15 to 35 tons per 24 hours. One set of four cones at the Columbia mill, Marshall Basin, Colorado, treats 30 to 35 tons of stuff crushed through 20 mesh per 24 hours. Bernard McDonald reports a set of four cones treating 30 tons of stuff through 30 mesh per 24 hours. He uses a dead box to feed the ore quietly to the first cone. For the spigots he uses a piece of hose 2 inches in diameter, with a clamp attached, to replace the dial cocks which soon become leaky from wear. He gives sizing tests of the spigots, as shown in Table 230. This cannot be said to

TABLE 230.—SIZING OF PRODUCTS OF BROWNE SIZER.

	First Spigot.	Second Spigot.	Third Spigot.	Fourth Spigot.	Overflow.
	Weights of the Products in Pounds per Twenty-four Hours.				
	16,560	14,400	14,986	6,120	7,373
	Sizing Test of Products.				
Through 30 on 40 mesh	5.97%	3.73%	.....	.....	.....
Through 40 on 60 mesh	8.44	21.44	8.58%	2.89%	.....
Through 60 on 80 mesh	5.38	4.89	5.85	2.97	0.22%
Through 80 on 100 mesh	7.07	13.64	13.38	8.91	6.87
Through 100 on 120 mesh	11.04	10.92	19.44	24.20	16.25
Through 120 on 150 mesh	9.46	10.89	20.32	21.24	16.71
Through 150 mesh.....	52.65	34.50	32.42	39.77	59.95
	100.01	100.01	99.99	99.98	100.01

be good classification, for the average diameter of grain in the first spigot product is smaller than that in the second, and further, the first spigot contains too much fines and the later spigots too much coarse material. This is probably a fair illustration of the imperfection of the deep pocket classifiers.

Mill 86 uses a Browne Hydrometric Conical Sizer which has but three cones with inner diameters 13½, 14½ and 16 inches respectively. It is fed with the undersize of No. 5 trommel with square holes, 0.0345 inches (0.88 mm.), or practically, $\frac{1}{30}$ inch. The three spigots go to Nos. 1, 2 and 3 Gilpin County bumping tables respectively. The overflow goes to a canvas table 6×10 feet, but it is too variable for good work on account of imperfections in the mounting.

§ 312. In Mill 18, No. 1 Hydraulic Classifier has two cones *A* and *B* with 60° angle (see Fig. 246). The first is 2 feet 6 inches, the second 4 feet 6 inches in diameter. The third cone *C*, which follows, having no hydraulic, is described in another place (see § 334). The application of the hydraulic in these two cones is by placing a small cone *D* near the bottom, rising vertically toward the apex of which is fed the hydraulic water *E*. The effect of this arrangement is to make a pressure box of the space beneath the little cone and a sorting column of the annular opening ½ inch to 1 inch wide between its base

and the wall of the large cone. The heavier grains which pass down are discharged at the spigot *F* below. The cones are fed through steeply sloping feed soles, the ends of which are elevated 5 inches above the level of the overflows. The little inverted cone was mounted on a vertical shaft with a pulley *G* for applying a rotary motion to it, but the rotation was given up. This classifier is fed with the undersize of No. 4 trommel with 10-mesh cloth screen and holes

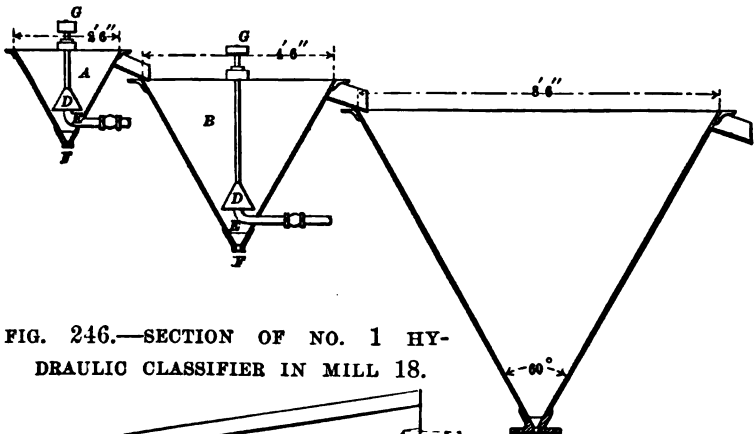

FIG. 246.—SECTION OF NO. 1 HYDRAULIC CLASSIFIER IN MILL 18.

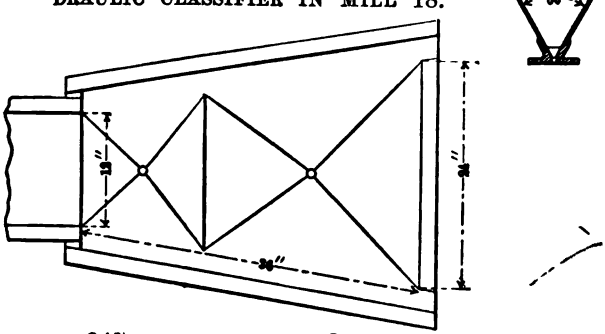

FIG. 247*a*.—PLAN OF NO. 2 HYDRAULIC CLASSIFIER IN MILL 85.

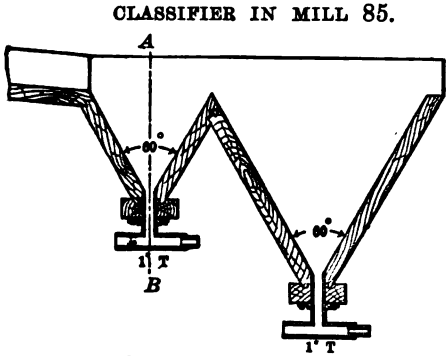

FIG. 247*b*.—LONGITUDINAL SECTION.

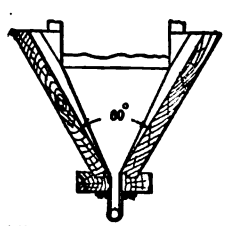

FIG. 247*c*.—CROSS SECTION *AB*.

0.051 inch (1.30 mm.), in size. It delivers spigots to jigs and overflow to No. 1 whole current box classifier.

§ 313. RITTINGER'S POINTED BOXES WITH ASCENDING CURRENT[95] consist of a series of pointed boxes in each of which there is a vertical descending hydraulic water pipe widening into a mushroom shape at its lower end, forming a pent-up space or pressure box beneath it and an annular sorting column around it.

In Mill 85, No. 2 Hydraulic Classifier (see Figs. 247*a*-247*c*), has two deep hopper-shaped pockets which are built in a V-shaped trough with sides widening from the feed end toward the tail end. Each pocket has a 1-inch T and plug discharge below. It is fed with battery pulp after it has passed over amalgamated plates. The spigot products go to bumping tables and the overflow to waste.

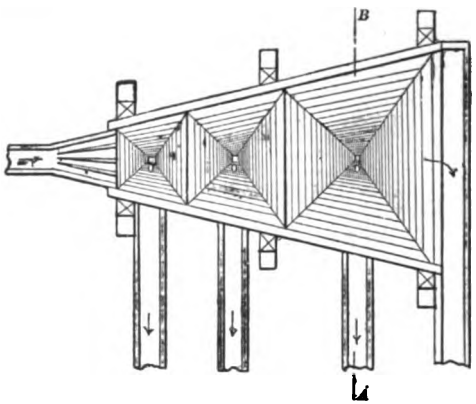

FIG. 248*a*.—PLAN OF A HYDRAULIC CLASSIFIER FROM LINKENBACH.

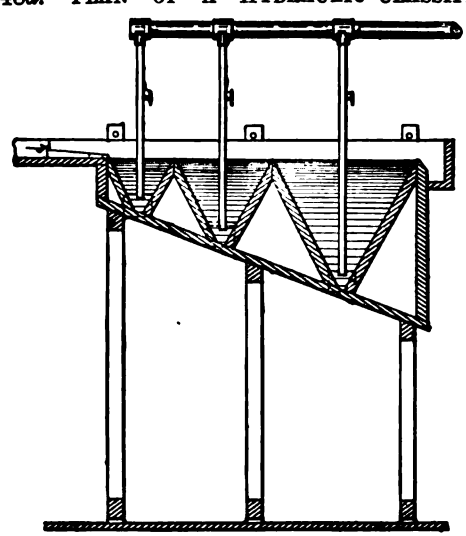

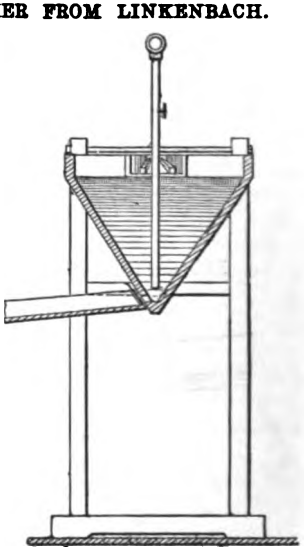

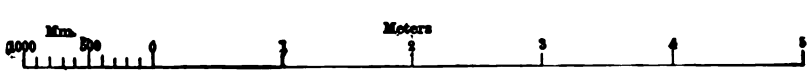

FIG. 248*b*.—LONGITUDINAL SECTION. FIG. 248*c*.—CROSS SECTION ON *AB*.

Linkenbach describes a classifier for treating $1\frac{1}{2}$-0 mm. stuff at the rate of 800 liters pulp per minute (see Figs. 248*a*-248*c*).

Linkenbach also gives a device for saving height by using two series of six hoppers each, side by side, instead of one series of three. The total width and capacity are the same as in the last, but the height is only half as great. The Nos. 1 and 2 spigots of both sets go together, the Nos. 3 and 4 also, and the Nos. 5 and 6, making therefore three products as in the preceding case.

WENGLER AND LOWE'S CLASSIFIER consists of five pointed boxes differing from the last in having long vertical, tubular sorting columns and T and plug or goose neck spigots. It treats 1½-mm. pulp from gravity stamps at the rate of 1,080 liters per minute, containing 18.2 kilos of solid material, and yields: First spigot, 76.5 liters per minute, containing 4.9 kilos solid material; second spigot, 72.0 liters per minute, containing 3.1 kilos solid material; third spigot, 65.2 liters per minute, containing 2.1 kilos solid material; fourth spigot, 45.0 liters per minute, containing 1.55 kilos solid material; fifth spigot, 39.3 liters per minute, containing 1.35 kilos solid material; overflow, 782 liters per minute, containing 5.20 kilos solid material; total, 1,080.0 liters per minute, containing

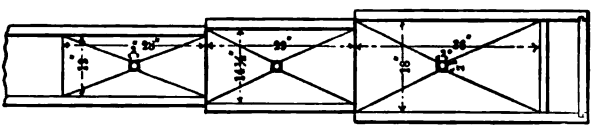

FIG. 249*a*.—PLAN OF NO. 1 HYDRAULIC CLASSIFIER IN MILL 21.

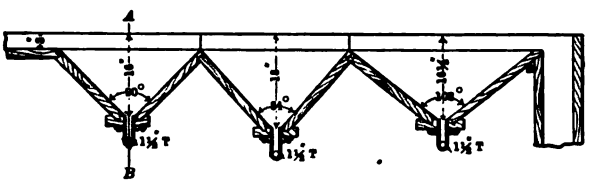

FIG. 249*b*.—LONGITUDINAL SECTION.

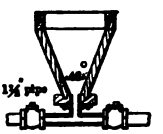

FIG. 249*c*.—SECTION *AB*.

18.20 kilos solid material. The ore was from the Himmelfahrt-fund mine at Freiberg, and contained argentiferous galena, blende, iron pyrites, copper pyrites, arsenical pyrites and quartz.

IN MILL 21, No. 1 HYDRAULIC CLASSIFIER consists of three rectangular hoppers, each one larger than its predecessor (see Fig. 249*a*-249*c*). It is fed by the undersize of No. 3 trommel, 12 mesh with 0.048-inch (1.22-mm.) hole and treats from 18 to 28 tons in 24 hours. The first two spigot products go to jigs, the third to a slime table and the overflow to waste. The overflow is 5% of the total tailings of the mill.

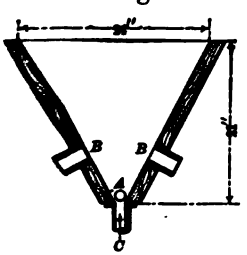

FIG. 250.—SECTION OF NO. 1 HYDRAULIC CLASSIFIER IN MILL 87.

The No. 2 hydraulic classifier of Mill 21 consists of one hopper, 3 feet square and 32 inches deep. The sides are vertical for 3 inches from the top and then slope 58°. It receives from a Huntington mill pulp which has passed through a slot $\frac{1}{40}$ inch (0.635 mm.) wide, at the rate of 15 tons per 24 hours. Its spigot is divided between No. 5 and No. 6 jigs and its overflow goes to slime tables.

IN MILL 87, No. 1 CLASSIFIER (see Fig. 250), is a hopper 30 inches long, 24 inches wide and about 21 inches deep, coming to a short edge below, with a vertical rising hydraulic pipe *C* 1 inch in diameter, and three side nipples for the spigots. One *A* is of 1-inch pipe close to the hydraulic, the other two *B* are of 2-inch pipe 6 inches above the hydraulic. The apex angle of the hopper is about 60 degrees. It is fed with the undersize of No. 4 trommel, 12 mesh. The spigots go to jigs and the overflow to vanners.

§ 314. In Mill 24, No. 1 Classifier (see Figs. 251*a*-251*c*), consists of a rectangular part, 29 inches long, 14 inches wide and 14 inches deep, with two hoppers in the bottom, each 14½ inches long, 14 inches wide and 10 inches deep. The sides of the hoppers slope 55° and the ends 53°. The feed launder *A* is 7 inches wide and 10 inches deep, entering, therefore, 4 inches above the top of the hoppers. The overflow spout *B* is 7 inches wide and 12 inches deep, or 2 inches above the top of the hoppers. At 10 inches above the apex of the first hopper, or at the level with the top of the hopper, is a rose *C* (see also Fig. 251*c*), consisting of a T end to a vertical 1-inch hydraulic pipe, and running across the current, having seven jets discharging vertically downward toward the apex of the hopper, in which is a cast-iron block *D* 1¾ inches thick, to take the wear. A vertical baffle plate, *E* running across the separator 6 inches from the feed end, extends down to the top of the first hopper. The second hopper has neither hydraulic nor baffle plate. The first hopper has two discharge spigots *F* ¾ inch in diameter with centers 3¼ inches above the top of the iron block. The second has one spigot *G* 1¼ inches in diameter, near the apex. The classifier is fed with

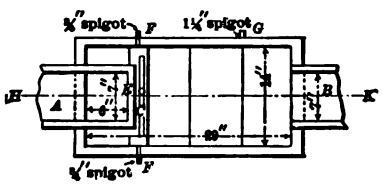

FIG. 251*a*.—PLAN OF NO. 1 HYDRAULIC CLASSIFIER IN MILL 24.

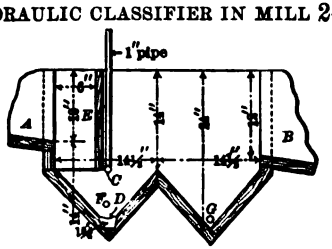

FIG. 251*b*.—SECTION ON *HK*.

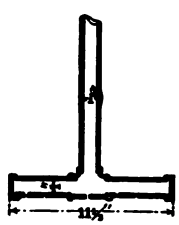

FIG. 251*c*.—ROSE.

the undersize of No. 3 trommel, 3 mm.-0, and sends its three spigots and one overflow to jigs.

In Mill 88, No. 1 Classifier (see Figs. 252*a*-252*c*), is a hopper-shaped box with a flat bottom. The pressure box *A* is partitioned off below by four shields *B* mitered together at the corners, sloping at a less angle than the sides of the hopper. Between these four shields is left the slot *C* for the sorting column. The hydraulic is of ¾-inch pipe, and two spigots are used, ½ inch and ⅜ inch in diameter respectively. The overflow current is confined between the wall of the hopper and a shield *D* placed parallel to it and extending to a distance of 12 inches below the surface of the water. This aids in the prevention of the formation of a bank by lifting out heavier particles than would otherwise rise. The feed is the undersize of No. 3 trommel, 10-mesh wire cloth. The spigots go to jigs, the overflow to No. 2 hydraulic clasifier, which is like this, except that it has only one spigot of ½-inch pipe, which delivers its product to a jig. The overflow is used as feed water for stamps.

The No. 3 Classifier of Mill 88 differs from the preceding in that it is fed at both ends and overflows at the middle of one side (see Figs. 253*a*-253*c*).

The slot is $6 \times \frac{1}{4}$ inch. It is fed with pulp from stamps through $\frac{1}{40}$-inch (0.635-mm.) screen and it delivers its spigot to a jig and overflow to a vanner.

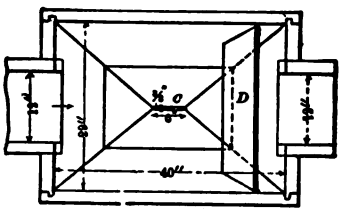

FIG. 252*a*.—PLAN OF NO. 1 HYDRAULIC CLASSIFIER IN MILL 88.

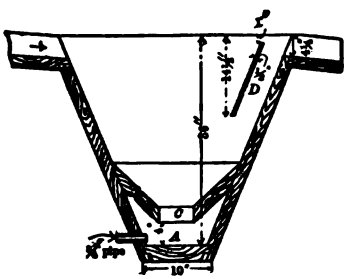

FIG. 252*b*.—LONGITUDINAL SECTION.

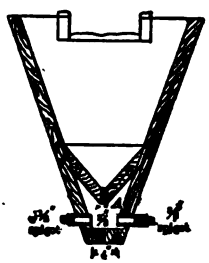

FIG. 252*c*.—CROSS SECTION.

IN MILL 39, NO. 3 HYDRAULIC CLASSIFIER is a hopper 23 inches square at the top, 4 inches square at the bottom, and 21 inches deep. The overflow spout

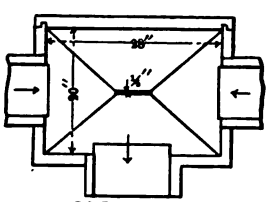

FIG. 253*a*.—PLAN OF NO. 3 HYDRAULIC CLASSIFIER IN MILL 88.

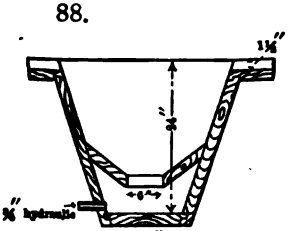

FIG. 253*b*.—LONGITUDINAL SECTION.

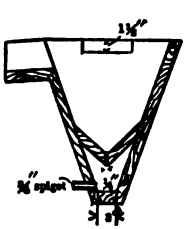

FIG. 253*c*.—CROSS SECTION.

is $8\frac{1}{2}$ inches deep, 14 inches wide, and the overflow stream is 3 inches deep. The pressure box is partitioned off by two shields sloping downward toward each

other, leaving a slot $1\frac{1}{2}\times4$ inches for a sorting column, 4 inches above the bottom. These two shields extend about half way up on the two ends. The length of the slot is across the classifier. A hydraulic pipe $1\frac{1}{2}$ inches in diameter, two $1\frac{1}{2}$-inch nipples and plugs with $\frac{1}{2}$-inch spigots, complete the apparatus. The slope of all four sides is 65°. There are two of them and they are fed with Huntington mill pulp, $2\frac{1}{2}$ mm.-0. The spigots go to jigs and the overflow tc No. 4 hydraulic classifier.

In Mill 39, No. 4 Hydraulic Classifier is similar to No. 3 hydraulic classifier, except that it is 31 inches long at the top, 29 inches wide, and about 28 inches deep. The overflow is 7 inches deep and 18 inches wide. It has but one spigot. The spigot product goes to a jig and the overflow to No. 2 whole current box classifier.

The Dodge Sizing Box, made by the Parke & Lacy Co., is in principle the same as the above. The chief difference lies in the fact that it has a pyramidal stopper in the slot by raising or lowering which, the cross section of the sorting column can be decreased or increased.

Linkenbach gives a classifier consisting of widening hoppers *a* (see Figs. 254*a*-254*c*), three in number, with pressure box *b* and slot *d* for the hydraulic columns. The slots run lengthwise and are $8\frac{1}{2}\times1\frac{1}{4}$ inches for the first two, and $9\times1\frac{1}{2}$ inches for the last. The width at the receiving end is $14\frac{1}{4}$ inches and at the overflow is 47 inches. The total length of the apparatus is 93 inches and it treats 600 liters of pulp per minute.

§ 315. James Carkeek Classifier.—In this classifier the whole length is occupied by pockets. The carrying current in every case plunges into the next pocket. The pockets are deep with practically hopper bottoms terminating in slots for sorting columns. As used in Mill 40, No. 1 hydraulic classifier, the slots are $4\times\frac{3}{4}$ inch, $4\times\frac{5}{8}$ inch, $4\times\frac{1}{2}$ inch and $4\times\frac{3}{8}$ inch respectively, and all are 2 inches high. The spigots are $\frac{3}{4}$, $\frac{1}{2}$, $\frac{3}{8}$ and $\frac{1}{4}$ inch in diameter respectively, and all the hydraulic pipes are 1 inch in diameter. Its construction is well shown in Figs. 255*a*-255*b*. It treats the undersize of No. 4 trommel with 3-mm. round holes. The spigots go to jigs and the overflow to No. 1 whole current box classifier. The No. 2 hydraulic classifier in Mill 40 is similar to the No. 1, but has only two pockets. It treats the undersize of No. 5 trommel 3 mm.-0 and sends spigots to jigs and overflow to No. 1 whole current box classifier. Some idea of the work done by this classifier may be gained by reference to a sizing test of jig tailings (see § 462).

Fraser & Chalmers Hydraulic Classifier is a hopper with a pocket, 21 inches long, 12 inches wide at the top and $2\frac{1}{4}$ inches square at the bottom, and 13 inches deep, with ends sloping 55° and sides sloping 45°, having an adjustable baffle plate across the stream, $3\frac{3}{4}$ inches from the receiving end, and an overflow spout 2 inches deep and 12 inches wide. A T and plug spigot is used with a sorting column of $1\frac{1}{2}$-inch pipe, or larger, hydraulic pipe $1\frac{1}{2}$ inches in diameter, and spigot nipple $\frac{1}{2}$ inch, or larger. They recommend a low head for the hydraulic. This sorting column, to be on a par with mill practice, treating perhaps 60 tons per 24 hours, would probably have to be as large as $2\frac{1}{2}$-inch or 3-inch pipe.

§ 316. Deep Double Trough Classifiers.—A hydraulic classifier shown by Rittinger, also the Altenberg classifier and another of the same class at the Vaucron mill,[58] all have a V trough within a trough on the principle of the Lake Superior classifier (see § 299), but differ from that in widening and deepening the trough as the water moves forward, and in placing a dam at the lower end high enough to fill with water the whole apparatus. Open slots are placed in the bottom of the V to act as sorting columns, and hydraulic water is introduced in the space between the V and the outer trough, which is compartmented

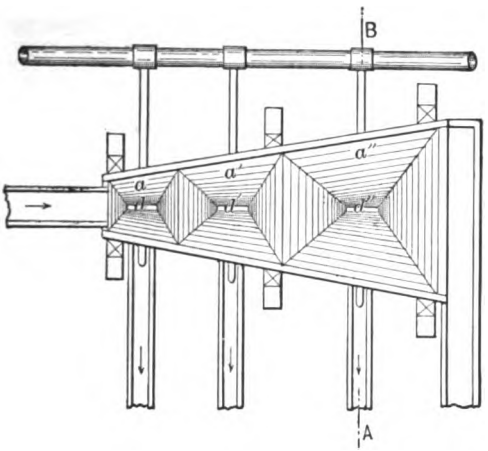

FIG. 254*a*.—PLAN OF A HYDRAULIC CLASSIFIER FROM LINKENBACH.

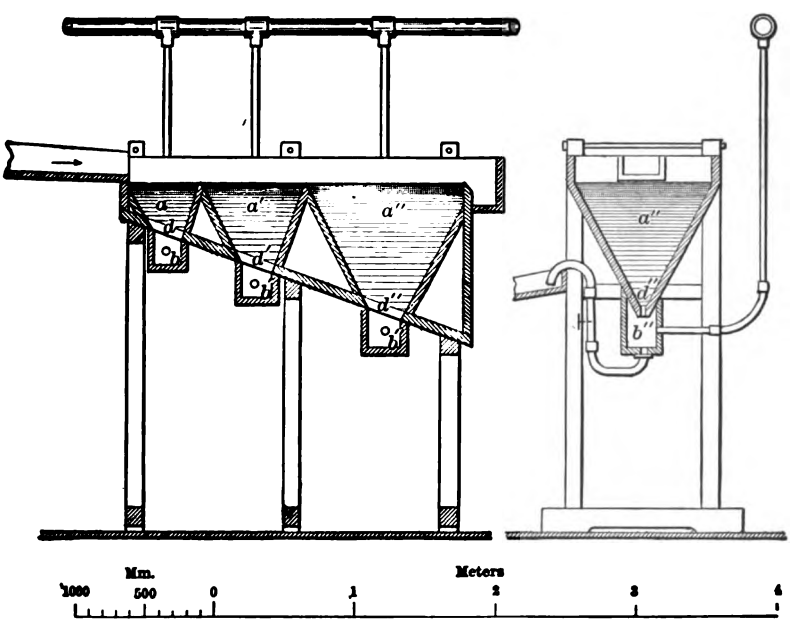

FIG. 254*b*.—LONGITUDINAL SECTION. FIG. 254*c*.—SECTION *AB*.

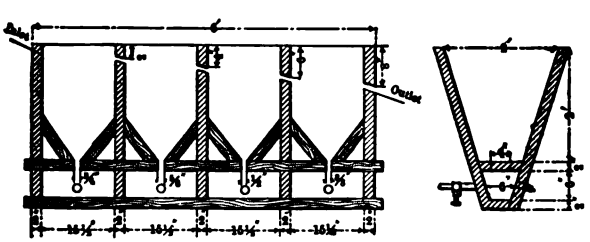

FIG. 255*a*.—LONGITUDINAL SECTION OF THE CARKEEK CLASSIFIER. FIG. 255*b*.—CROSS SECTION.

to suit the independent hydraulics and spigots. The Altenberg apparatus and that at the Vaucron mill both place hoppers in the outer trough. At the Vaucron mill the feed ranges from 1 mm. to 0, and there are formed eight spigot products and an overflow.

G. G. GATES' HYDRAULIC CLASSIFIER ("segregator") (see Figs. 256*a*-256*c*), consists of a V box *A* 6 feet long, 18 inches wide at the top and 4 inches at the bottom and 12 inches deep, with sides sloping 60°. At the discharge end a pocket *B* is placed in the bottom of the box, consisting of an extension downward, 30 inches long, 4 inches wide, with the front and rear ends sloping 60°, the sides being vertical. Extending down vertically from this is the sorting column *C*, consisting of a pipe 2½ inches in diameter and 8 inches long. At its lower end

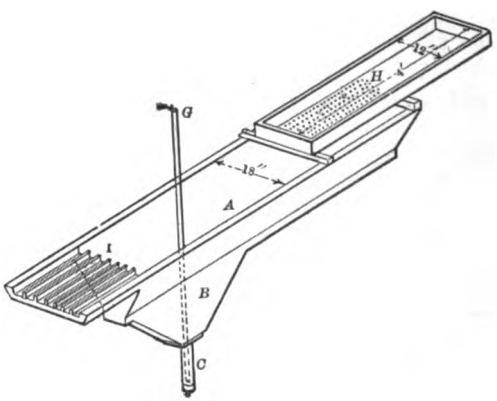

FIG. 256*a*.—PERSPECTIVE OF G. G. GATES HYDRAULIC CLASSIFIER.

FIG. 256*c*.—SECTION *KL*.

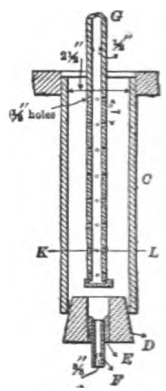

FIG. 256*b*.—SECTION OF SORTING COLUMN.

it has a rubber stopper *D*, wooden nipple *E* and iron jet *F*, with a hole ⅜ inch in diameter for discharging the heavy product (see Fig. 256*b*). The hydraulic water is brought in from above by a vertical ½-inch pipe *G* bored below with ⅛-inch holes in four vertical rows, 90° apart, 8 holes in a row, 1 inch apart vertically (see Fig. 256*b*). They extend down to the plug at the bottom of the sorting column. The sorting is probably done by the upper six rings of holes. A plate screen *H* 4 feet long, 12 inches wide, punched over part of its length with ⅛-inch round holes, serves to feed an even current to the apparatus and incidentally to remove chips, etc.

As used in Mill 78, four of these classifiers treat the whole tailings of Mill 71, stamping through 30-mesh brass cloth, amounting to about 93 tons per 24 hours. They are fastened together in pairs side by side. The spigot product is about 70% and goes to waste, while the overflow amounts to 30% and is sent by launders to canvas tables. The distribution is made as the pulp rises to pass out of the overflow of the classifier by split launders *I*, a more perfect distribution than could be had probably in any other way. For the four classifiers 12 miner's inches of water come with the pulp and 3 more are required by the hydraulics. Of these 1 goes away in the spigots and 14 go by the overflow to the canvas tables. Assuming the miner's inch to be equal to 1½ cubic feet, or 11.22 gallons per minute, we have for four classifiers:

Water with pulp,	134.64 gallons per minute.	Spigot discharges,	11.22 gallons per minute.
Hydraulic water,	33.66 gallons per minute.	Overflow to tables,	157.08 gallons per minute.
	168.30		168.30

A sizing test of the spigot product of this classifier is given in Table 320.

THE No. 1 AND No. 2 CLASSIFIERS OF MILL 86 are alike except that the former has ¾-inch spigot and the latter a ½-inch spigot. They are in the form of hoppers (see Figs. 257*a*-257*c*), 24 inches long and 24 inches wide at the top, with vertical sides, the ends sloping 60° to a transverse edge. Two blocks of wood *C* are put in, one at each end near the bottom, forming a pressure box *D* beneath them and a transverse slot *E* for a sorting column between them. On the blocks are screwed two adjustable iron strips *F* with straight edges to give a true slot of the width desired. The hydraulic water comes in from below by a 1-inch pipe *G* running horizontally just beneath the slot, with holes bored in it all along. The current so delivered moves upward through the slot. The heavy grains discharge through the central spigot *H* below, consisting of ¾-inch or ½-inch holes in a 2½-inch plug. On the end of the pipe is a cap *K*, which can be removed for cleaning. A vertical sliding cross partition *L* serves to force

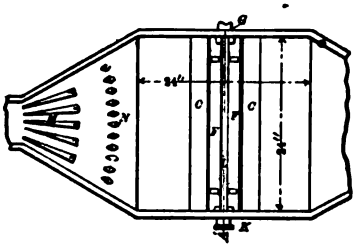

FIG. 257*a*.—PLAN OF NO. 1 HYDRAULIC CLASSIFIER IN MILL 86.

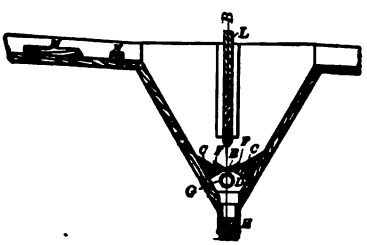

FIG. 257*b*.—LONGITUDINAL SECTION.

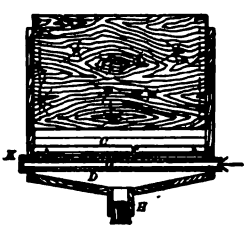

FIG. 257*c*.—SECTION *AB*.

the whole current to pass down for treatment to the neighborhood of the slot. A distributor with adjustable buttons *M* and *N* feeds the pulp across the whole width. No. 1 is fed by the undersize of No. 4 trommel with 1.25-mm. round holes. It sends spigot to percussion table and overflow to No. 2 classifier, which sends its spigot to Frue vanner and overflow to slime tables by No. 1 unwatering tank.

§ 317. IN MILL 30, CLASSIFIER No. 1 (see Figs. 258*a*-258*c*), consists of three short V boxes in series, measuring at the top 10 inches long, 12 inches wide, 15 long, 18 wide and 22½ long, 27 wide, respectively. The sides of the V's slope 54°, 63° and 55° respectively. The depths to the top of the slots are 7½, 17 and 19 inches. The two sides come to an edge below, leaving a slot *C* running lengthwise. The three slots or sorting columns are: 10 inches long, 1 wide, 2 deep; 15 inches long, ¾ wide, 2 deep; 22 inches long, ½ wide, 2 deep. Two little blocks *D* are inserted to preserve the width of the slots. The pressure boxes *E* below are in the form of hoppers, 8, 13 and 15 inches deep respectively,

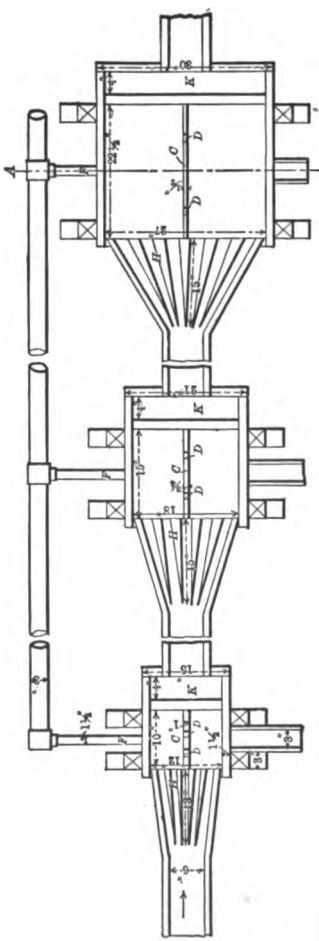

FIG. 258a.—GROUND PLAN NO. 1 HYDRAULIC CLASSIFIER IN MILL 30.

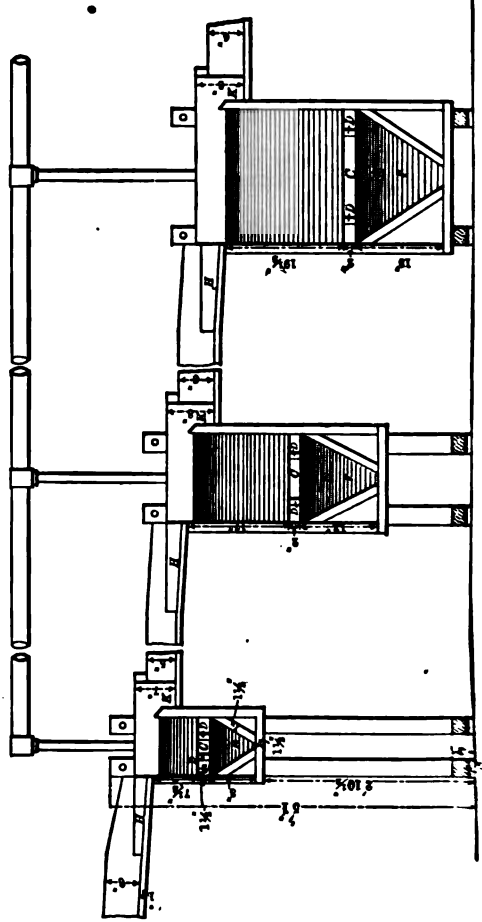

FIG. 258b.—LONGITUDINAL SECTION.

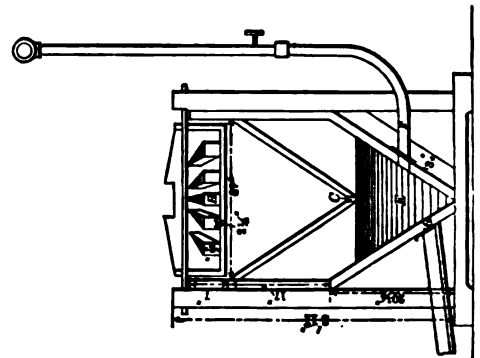

FIG. 258c.—SECTION ON LINE AB.

below the sorting column, with hydraulic pipe *F* entering on one side and spigot *G* discharging on the other, near the apex.

Adjustable distributors with pointers *H* distribute the current the whole width of the boxes. The streams, in every case, plunge into the boxes from a feed-sole at least 1 inch above the water. The pulp overflows the whole width into a collecting box *K* and is then contracted into a narrow launder to convey it to the distributor of the next box. The hydraulic pipes are all 1½ inches in diameter. The spigots are 1, ⅝ and ½ inch in diameter.

It is fed with the undersize of No. 2 and No. 3 trommels with 3-mm. and 2.5-mm. round holes, respectively. It delivers spigot products to jigs and overflow to No. 1 whole current box classifier. Sizing tests of the products of this classifier are given in Table 255.

Linkenbach's Fig. 23 is the design from which the above classifier was probably taken; his dimensions are shown in Table 231. One used at Ems has four

TABLE 231.—DIMENSIONS BY LINKENBACH FOR V BOXES DESIGNED TO TREAT 800 LITERS PER MINUTE.

	Length.	Width.	Depth.
	Inches.	Inches.	Inches.
No. 1 V box.....	20	22¼	15
No. 2 V box.....	32½	33¾	29¾
No. 3 V box.....	42½	51	41

boxes of which the first three are of the same size as those given by Linkenbach, while the fourth is 66 inches long, 65 inches wide and 47 inches deep. It treats 800 liters pulp per minute.

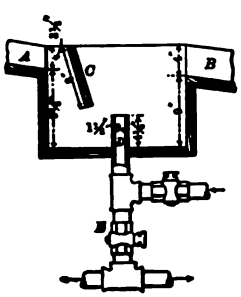

FIG. 259.—LONGITUDINAL SECTION OF NO. 1 HYDRAULIC CLASSIFIER IN MILL 20.

MILL 20 HAS A HYDRAULIC CLASSIFIER (see Fig. 259), in the form of a rectangular box 18 inches long, 14½ inches wide and 13 inches deep. The receiving launder *A* is 3½ inches down and 6 inches wide. The overflow *B* is 6 inches wide and 4 inches down. In front of the feed launder is a deflector, or baffle board *C*, 8 inches wide. In the center of the bottom and extending vertically 4¼ inches above the bottom, is placed a 1½-inch pipe *D* to act as sorting column. The hydraulic water is brought in by a 1½-inch T; the spigot is drawn off through a 1½-inch cock *E* below, and divides in two parts by a T, feeding two jigs. The overflow goes to vanners. The classifier is fed with the undersize of No. 5 trommel with 0.06-inch (1.52-mm.) round holes. The fact that the bottom is always full of sand saves the box from wearing out. This is practically a very shallow hopper, because the sand takes that form as soon as the spaces are filled.

THE "HEBERWASCHE," OR SIPHON CLASSIFIER, invented by Osterspey and used at Mechernich, would at first sight appear to fall into this group, but the author conceives that its work is done according to the laws of hindered settling and it has, therefore, been placed with jigs and other hindered settling machines (see § 395).

III. TUBULAR HYDRAULIC CLASSIFIERS.

§ 318. GENERAL.—These may be used for treating the same sizes as either the shallow pocket or the deep pocket classifiers. They include all the different forms of *spitzlutten*. The word *spitzlutte* signifies a pointed tube, and if we

examine the operation of Rittinger's *spitzlutte,* the first to claim the name, we find it has its carrying current brought in by a steeply descending tube, a sorting column below with adjustable upward current, and its receding carrying current leaving by a tube, rising steeply, of uniform adjustable area of cross section.

The essential features of this apparatus appear to be: First, an upper sorting column of uniform sectional area, in which the rising carrying current acts, and, second, a lower sorting column of uniform sectional area in which the rising hydraulic water acts. In all the tubular classifiers these features are present to greater or less extent.

§ 319. THE RITTINGER SPITZLUTTE is made in two forms: Figs. 260*a*-260*c* for heavier grains which fall in a current rising with a velocity of 31 mm. per second, and Figs. 261*a* and 261*b* for lighter grains which rise in 31 mm. per

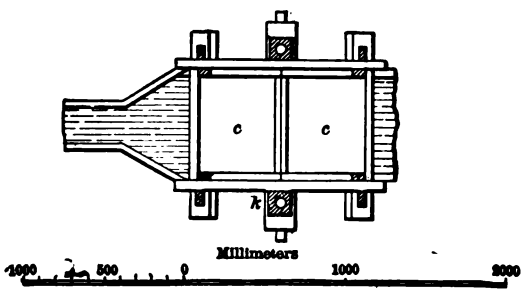

FIG. 260*a*.—PLAN OF THE RITTINGER RAPID CURRENT SPITZLUTTE.

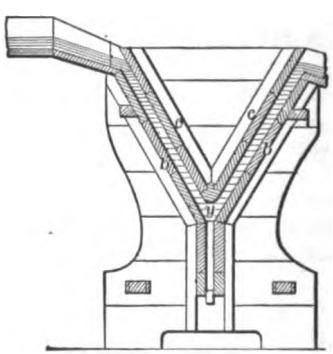

FIG. 260*b*.—LONGITUDINAL SECTION.

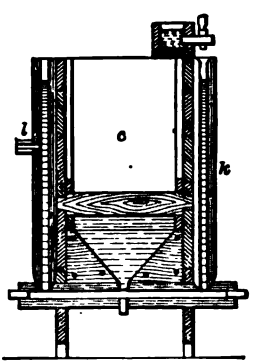

FIG. 260*c*.—CROSS SECTION.

second current. The former consists of a box with a transvere V section with the sides *b* of the V sloping 60°. Inside it is a V-shaped displacer, or prism *c;* which can slide up and down between vertical guides. The displacer is always thus centered in the V box, and between the sloping sides of the two parts will be left adjustable spaces or tubes for bringing in and for taking out the carrying current. The length of these two tubes for coarse stuff must be about 914 mm.; less is insufficient for good settling, more is unnecessary. The width may be 620 mm., and the thickness will depend upon the size of grain it is desired to lift, and upon the quantity of water in the carrying current. An apparatus of the above width, designed to treat 283 liters (10 cubic feet) per minute, will require a thickness of 61 mm. for a speed of current of 125 mm. per second. The lower sorting column below *y* is wedge-shaped, 38 mm. wide and comes to a T discharge below.

At the Anna stamp mill at Przibram, a set of four *spitzlutten* receiving 2-mm. stuff from stamps, had the dimensions shown in Table 232. The length given is from feed to discharge, which is approximately the same as the length of the upper sorting column.

TABLE 232.—DIMENSIONS OF SPITZLUTTEN AT ANNA STAMP MILL IN PRZIBRAM.

	Length.	Width.	Thickness of Current.
	Meters.	Meters.	Meters.
No. 1	0.85	0.32	0.05
No. 2	1.00	0.48	0.05
No. 3	1.16	0.64	0.08
No. 4 (a)	1.32	0.64	0.10

(a) There are two of these side by side.

Rittinger held that the thickness of the current between *b* and *c* should not be too great (not over 76 mm.), lest disturbing eddies should come in. The height H, of the feed-sole above the overflow must be sufficient according to the law of falling bodies to give the computed velocity V as determined by the well-known formula, $V^2=2gH$, where *g* is the acceleration due to gravity. As shown by the drawing, Rittinger used a very small head of water for his hydraulic

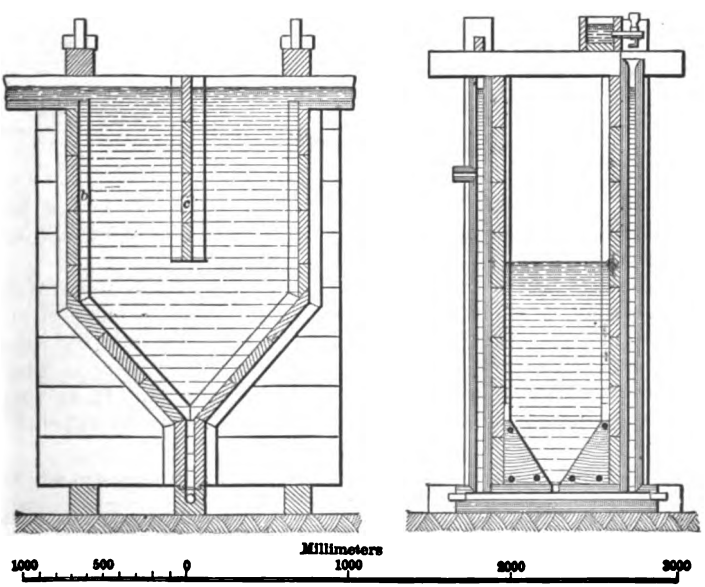

FIG. 261*a*.—LONGITUDINAL SECTION OF THE RITTINGER GENTLE CURRENT STITZLUTTE.

FIG. 261*b*.—CROSS SECTION.

water *k* and he used a rising discharge or goose neck *l* for removing the spigot product.

O. Bilharz has designed a *spitzlutte,* adding to the essential features of Rittinger's apparatus several points. He makes it of plate iron, using iron pipe fittings for the hydraulic attachments. He widens the later boxes to diminish the velocity of the upward current, to suit the settling of the finer grains. His hydraulic water is brought in under full hydrant pressure and the quantity for each box is regulated by an independent faucet. His spigots also have inde-

pendent faucets to regulate the amount of discharge. "For increased capacity, a larger number of boxes of the proper breadth are introduced; for a temporary reduction of capacity, some of the boxes are simply shut off."

Rittinger's form for gentler currents (see Figs. 261*a* and 261*b*), has its receiving tube and upper sorting column both vertical. This reduces the friction for the ascending particles and avoids the tendency of grains to settle on the sloping side, which thereby contract the area and change the velocity of the current. The width of the upper sorting column in Rittinger's figure is 630 mm.; the thickness is 630 mm. These dimensions will vary with the quantity of pulp and the size of the grain to be lifted, but the dimensions must be adopted in the original design, as the thickness of the current is not adjustable as in the other form. The vertical height of the column is 1,100 mm.

In sorting the undersize of a screen with holes 0.6 mm. in diameter to make four spigots and an overflow, using both forms of *spitzlutten,* Rittinger recommends the adjustments given in Table 233. It is stated that each spigot uses

TABLE 233.—ADJUSTMENTS RECOMMENDED BY RITTINGER FOR A SET OF FOUR SPITZLUTTEN.

	Velocity per Second of Water in Sorting Column.	Percent. of Total, Yielded by each Spigot.	Depth of Spigot Below Water Level.	Head of Hydraulic Water above Water Level.
	Mm.		Mm.	Mm.
No. 1.....	58.42	30	914	152
No. 2.....	23.37	25	.....	.....
No. 3.....	9.398	20	.....	.....
No. 4.....	3.81	(a) 15	538	203

(a) This leaves 10% in the overflow of the last *spitzlutte.*

an average of 7½ liters of hydraulic water per minute. It is not advisable to use many *spitzlutten* in series, since a change in the adjustment of any one necessitates a readjustment of all those that follow.

In Mill 41, Nos. 2 and 5 hydraulic classifiers are of the form of Rittinger's gentle current *spitzlutte.* The No. 2 hydraulic classifier consists of six *spitzlutten,* yielding four spigot products: two, like *spitzlutten,* side by side, give the third product and two give the fourth product. The details are given in Table 234. The discharges are by a T and goose neck. It is fed with the overflow of No. 1 hydraulic classifier and delivers spigots to vanners and over-

TABLE 234.—DETAILS OF NO. 2 HYDRAULIC CLASSIFIER IN MILL 41.

	Width.	Height.	Thickness of Descending Column.	Thickness of Ascending Column	Diameter of Spigot.
	Inches.	Inches.	Inches.	Inches.	Inches.
No. 1.....	36	32	8	8	¼
No. 2.....	42	17	18	18	¼
No. 3 (two of them).....	42	14	9	46	¼
No. 4 (two of them).....	42	18	18	18	¼

flow to No. 1 whole current box classifier. No. 5 hydraulic classifier is similar to No. 2, except that it consists of two *spitzlutten* only. It is fed with the overflow of No. 4 hydraulic classifier and delivers spigot products to vanners and overflow to No. 1 whole current box classifier.

At Schemnitz, Hungary,[13] a number of U-shaped iron pipes are placed side by side to take the place of one large V *spitzlutte.* With this arrangement, the quality of the product may be varied according to the number of U pipes in operation. If finer adjustment is needed, one U is made adjustable.

§ 320. MEINECKE SPITZLUTTE.—(See Figs. 262*a* and 262*b*.)—This consists of a number of concentric cylinders and cones, with sides sloping 60°, so united and combined as to make annular spaces in which the current can rise and fall. The carrying current has two periods of rising, the first more rapid than the second. The sands which settle out of each of these rising currents have to face a hydraulic current in order to find their way to their respective spigots. In this way the grains are cleaned from the finer sizes. Referring to the figure, the pulp comes in through *a*, *b*, c_1. It then rises through d_1, e_1, overflows into c_2, descending to rise in d_2, e_2, and finally overflows into the circular launder *f*.

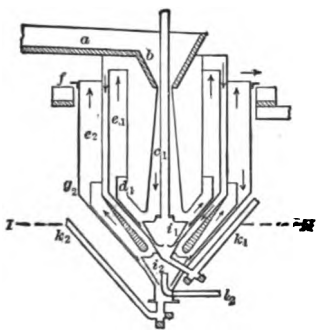

FIG. 262*a*.—SECTION OF MEINECKE SPITZLUTTE.

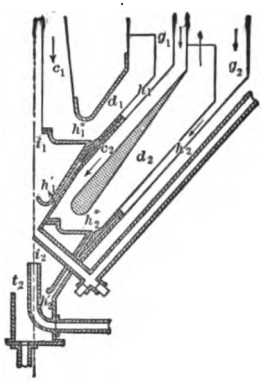

FIG. 262*b*.—ENLARGED SECTION OF THE SAME.

Hydraulic water is admitted by a pipe into the spaces i_1, and passes up through h'_1, h''_1, and h_1, g_1, allowing the heavier particles to pass out through the goose neck k_1, and preventing the finer sizes from entering. The second hydraulic is admitted through l_2, into the space i_2 and discharges the heavier particles through k_2, in the same manner as the first hydraulic. Two sizes of the *spitzlutte* are made, as given in Table 235. Water may be saved by dividing up the annular spaces by radial vertical partitions.

TABLE 235.—MEINECKE SPITZLUTTE.

Outer Diameter.	Capacity per Minute.	Difference of Level.		
		The Overflow is Below the Feed.	The Spigots are Below the Feed.	The Spigot is Above the Bottom.
Meters.	Liters.	Meters.	Meters.	Meters.
1.1	200 to 250	0.35	0.75	1.1
1.4	300 to 400	0.35	0.85	1.35

Mill 28 formerly used this machine as its No. 2 hydraulic classifier. It was of the second size mentioned in the table. The spigot pipes were both 1 inch in diameter, the hydraulic 1½ inches. The feed to this *spitzlutte* in Mill 28 was the overflow of the No. 1 hydraulic classifier and contained nothing larger than 0.4 mm. in diameter. It delivered spigots to No. 1 surface current box classifier and overflow to No. 1 whole current box classifier.

For good work it is essential that the apparatus shall be set plumb and that the overflow lips shall be perfectly true, otherwise the currents will be uneven.

§ 321. M. P. Boss used successfully at the Harshaw mill[72] a classifier for

stamp pulp, which consisted of an acute cone with a deflector delivering the feed near the bottom (see Fig. 263). A central rod or pipe *C* serves to regulate the size of the discharge opening *g* at the bottom, but it does not furnish water. It differs from the other tubular classifiers in having an expanding upper sorting column and in omitting the lower sorting column altogether. It is fed with stamp pulp and sends the coarse sand to No. 1 grinding pan of a Boss system and the fine sand to No. 3 pan, where amalgamation begins.

§ 322. Double Cone Hydraulic Classifiers.—If a cone is placed within a cone, an annular space intervenes between the two, which has been used by several designers as the upper sorting column of a tubular classifier. If the inner cone has a wider angle than the outer, there will be one standard position

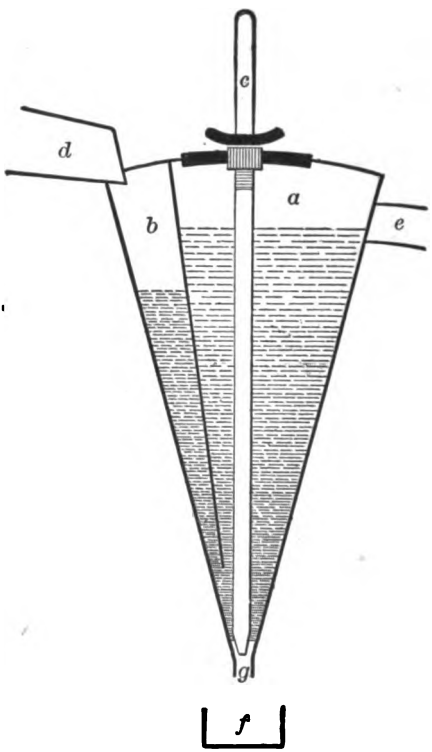

FIG. 263.—SECTION OF THE BOSS CLASSIFIER.

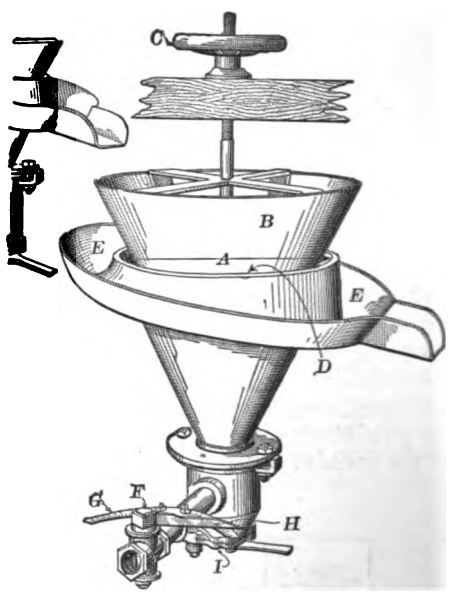

FIG. 264.—DOUBLE CONE CLASSIFIER.

for the former in which the horizontal sectional area of the annular space will be the same all the way up, and the current rising therein will be uniform. If, however, the inner cone is raised above the standard position, the area at the upper end will be greater than that at the lower end, and the current will be retarded, but if lowered below, it will be less, and the current will be accelerated. Raymond[95] and Armitage[81] both describe such classifiers. The chief manufacturers of mill machinery of Colorado all advertise this machine, and it seems to have found some favor in that State.

As shown in Fig. 264, the pulp is fed into the central cone *B* and passes through holes around the apex at the junction between the lower and upper sorting columns. The heavy grains sink through the lower sorting column and

go out of a molasses spigot *I*, the hydraulic water being brought into a pressure box through a dial cock *F*; the light grains rise through the annular space or upper sorting column between *A* and *B* and overflow all around the cone into a collecting launder *E*. A series of these cones will yield a series of products. The cones, and therefore, the sectional area must increase in size as the grains diminish. Four sizes are recommended, as shown in Table 236.

TABLE 236.—SIZES OF DOUBLE CONE HYDRAULIC CLASSIFIERS.

Diameter of Outer Cone.	Size of Grain to be Treated.
Inches.	Mesh.
12	8 to 20
20	20 to 30
30	30 to 40
40	Finer than 40

Mill 87 has one of these, made by Hendrie and Bolthoff, for its No. 2 hydraulic classifier. The outer cone is 12 inches in diameter and its sides slope 60°. It has a ¾-inch hydraulic pipe and a molasses gate spigot. It is fed with pulp from stamps passing through screens 24 or 30 meshes to the linear inch, and yields spigot product to jig and overflow to vanner. Two machines treat the pulp from 20 stamps, perhaps 40 tons of solid material, per 24 hours.

In Mill 19, No. 1 hydraulic classifier consists of seven double cone classifiers of sheet iron arranged as shown in Fig. 265, with sides sloping 60°, put together

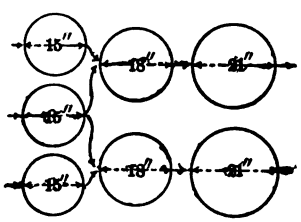

FIG. 265.

as follows: Three cones side by side, 15 inches in diameter, yield No. 1 spigot product; two cones side by side, 18 inches in diameter, yield No. 2 spigot product; two cones side by side, 21 inches in diameter, yield No. 3 spigot product. It is fed with undersize of No. 4 trommel with 10-mesh screen, and yields: Spigot products to three sets of jigs and overflow to No. 1 whole current box classifier. The hydraulic water comes through a pipe 1 inch in diameter, with a regulating valve. The dimensions of the three sets of cones are given in Table 237. Both outer and inner cones have their sides sloping 60° and are therefore, parallel.

TABLE 237.—NO. 1 HYDRAULIC CLASSIFIER OF MILL 19.

Diameter of Outer Cones at Top.	Diameter of Inner Cones at Top.	Width of Annular Space.
Inches.	Inches.	Inches.
15	12	1¾
18	16½	1
21	21	2

C. Le Neve Foster[8] describes a double cone hydraulic classifier used at the Frongoch mine, which is similar to that last described in that the cones are parallel.

The outer is of wood, the inner of sheet iron, and the space between forms the upper sorting column. The truncated apex of the outer cone connects with a pressure box below with hydraulic water and spigot, and in the truncated apex is a conical plug, with an annular space around it, forming the lower sorting column. This plug is adjustable up and down at will by a screw, thus giving a variable section to the lower sorting column. The spigot is a disc sliding over a hole, shutting off much or little as desired.

§ 323. THE CHARLETON ORE CONCENTRATOR.—(See Figs. 266*a* and 266*b*.)—This is a tubular classifier which uses no hydraulic water, but yet has both upper and lower hydraulic columns. The pulp fed at *d* divides itself into the clearer water *a*, and the sand *c*. The former descends to the bottom, as shown by the arrows and rises to discharge as an overflow at *b*. The sand entering at *c* is subjected to the action of this rising current which lifts the lighter grains to overflow at *b* and allows the heavier grains to fall and find their way out

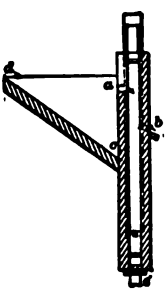

FIG. 266*a*.—LONGITUDINAL SECTION ON *AB*. OF CHARLETON CLASSIFIER.

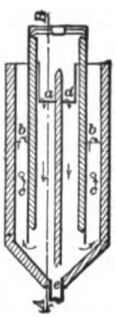

FIG. 266*b*.—CROSS SECTION.

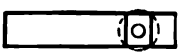

FIG. 267*a*.

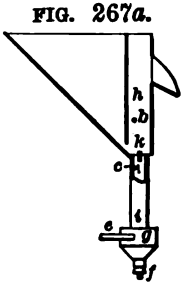

FIG. 267*b*.

FIG. 267*a*.—PLAN OF RICHARDS TUBULAR CLASSIFIER FOR COARSE WORK. FIG. 267*b*.—LONGITUDINAL SECTION.

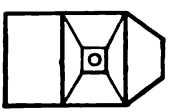

FIG. 268*a*.

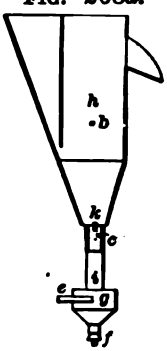

FIG. 268*b*.

FIG. 268*a*.—PLAN OF RICHARDS TUBULAR CLASSIFIER FOR FINE WORK. FIG. 268*b*.—LONGITUDINAL SECTION.

through the spigot *e*. A series of boxes would yield a series of products. The price that is paid for this economy of water is that some of the fine slimes go over at *a* and out at *e*, with the heavy product. A test would tell whether this loss was serious or not with any given ore. The apparatus must be built of a size to suit its work, as it has no means of adjustment.

§ 324. THE RICHARDS TUBULAR CLASSIFIER, designed by the author, is shown in Figs. 267*a* and 267*b* for coarse work and Figs. 268*a* and 268*b* for fine work. It has long, vertical sorting columns both above, *h*, and below, *i*, the former to allow a stray heavy grain *b* to settle, and the latter to allow a stray light grain *c* to rise. To make the sorted product from the spigot still more perfect, a vortex fitting, previously described in § 308, is placed below, which gives a helical rising current in the lower sorting column, guaranteeing like treatment of all grains in it. A vertical plate *k* is used to stop the rotation above, and fins to stop it below. The vertical form of the upper sorting column also guarantees no settling on the sides and consequent change in section and in the speed of the current. The hydraulic water is fed through a pipe *e* and the heavy product

discharged through a plug spigot *f*. The upper column *h* is made of any desired size, 2×3 inches, 3×4, 4×6, 6×8, 8×12 or 12×16, and the lower sorting column *i* also may be of any diameter, 1 inch, 1¼, 1½, 2, 2½, 3, or larger. The size or sectional area, of the upper column *h*, will be made to suit the quantity of pulp to be treated and the size of quartz to be lifted. Its size will increase with the quantity of pulp and as the diameter of the particles to be lifted diminishes. The size of the lower tube *i*, of the vortex *g* and the spigot *f*, depends upon the quantity of heavy product to be discharged. The greater the product, the larger the pipe. It also depends to a certain extent upon the size of the grains, for with very small sizes of grain it is difficult to adjust the upward current, unless the pipe is large. The effect of this apparatus is to obtain a very perfect separation between spigot and overflow, but it requires careful adjustment of the two columns, and so becomes too complicated when more than two are used in series.

This classifier serves very well to illustrate the use of the theory of free settling in designing and adjusting classifiers, and will, therefore, be considered at some length. Table 238 shows the velocity of current which 1 kilogram of water per minute gives in each size.

TABLE 238.—VELOCITIES OF CURRENTS FOR 1 KILOGRAM OF WATER PER MINUTE.

Dimensions of Upper Sorting Column..	Area of Upper Sorting Column.		Velocity per Second for 1 kilo Water per Minute.
Inches.	Sq. In.	Sq. Mm.	Mm.
2x3	6	3,871	4.305
3x4	12	7,742	2.150
4x6	24	15,484	1.077
6x8	43	30,968	0.5381
8x12	96	61,935	0.2690
12x16	192	123,871	0.1334

The experimenter will probably know the quantity of water in kilograms per minute which he wishes to handle and the diameter of quartz grain in millimeters that he wishes to lift. His next need will be answered by Fig. 287 or by Table 262, which gives figures obtained by experiment upon the speed of current required to lift his quartz.

Suppose he has 50 kilograms per minute of water to handle, and he wishes to lift a grain of quartz about 1 mm. in size, Table 262 shows that he will require a current of 97 mm. per second to lift it. Referring to Table 238, we see that a 3×4-inch tubular classifier gives a velocity of 2.15 mm. per second for a 1 kilogram per minute feed. It will then give 107.5 mm. per second velocity when fed with 50 kilos per minute. This size is probably near enough for his purposes. If he wishes it exact, he can cut down the water a little to 45.1 kilos per minute, which, multiplied by 2.15, gives a velocity of 97 mm. per second, or he can make a tubular classifier that is larger in section, in the proportion of 97 to 107.5 (3×4.54 inches), which would then handle the exact quantity and yield the size of grain needed.

If he has chosen a velocity of 97 mm. per second for his upper sorting column, he will want the same for his lower, that is to say, the velocity cannot be greater below without forming serious banks, due to particles which rise in the lower sorting column, but will fail to rise in the upper, and it cannot be much less without injuring the work of sorting, because it will allow particles to pass down into the spigot that are less than the standard size. The size of this lower sorting column and of the spigot may be decided according to the principles laid down in § 308 and § 309.

After choosing the size of lower sorting column and spigot which will give

approximately the separation desired, the final adjustment may be made according to theory, as follows: The feed water is shut off temporarily, the spigot being left open, and the hydraulic water turned on until the weight of the water overflowing per minute is that weight shown by Table 227 to be necessary to lift the desired particles in the size of lower sorting column used. The feed may then be turned on and classifying begun. One may say that this adjustment of the lower sorting column deranges the adjustment of the upper sorting column, but the weight of the water rising in the lower sorting column makes such a small addition to that already rising in the upper sorting column, that it is negligible. This classifier may be adjusted by the eye, of course, as are

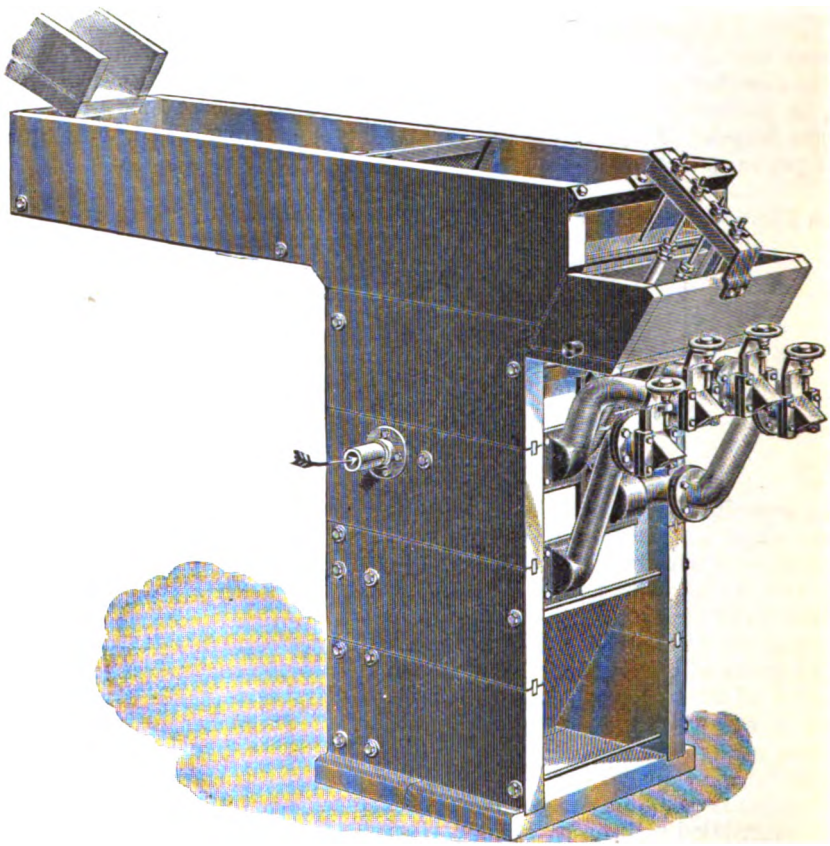

FIG. 269*a*.—MEINECKE CLASSIFIER.

other forms. It is well, however, in this case, to shut off the feed temporarily and note the position of the hydraulic cock when the water overflows the very least amount, that is, when there is practically a balanced hydraulic. This gives the least amount of hydraulic that can be used without allowing fine slimes to pass out of the spigot.

LOCKHART'S AUTOMATIC GEM SEPARATOR is a tubular classifier, using an upward current in the annular space between two glass tubes. It is used to treat closely sized sands for diamonds and other gems.

§ 325. MEINECKE CLASSIFIER.—(See Figs. 269*a* and 269*b*.)—This classifier consists of a single V-shaped hopper *A* 34½ inches long, 20 inches wide and 20⅛

inches deep, with ends sloping to an edge and slot below, while the sides are vertical. The heavy sands, settling to the slot, meet in the first sorting column *B* a gentle rising current of water, which raises the lightest grains and passes them off in the overflow into *C*. Most of the grains then descend to the second sorting column *D*, where they meet a stronger hydraulic current, which raises a second

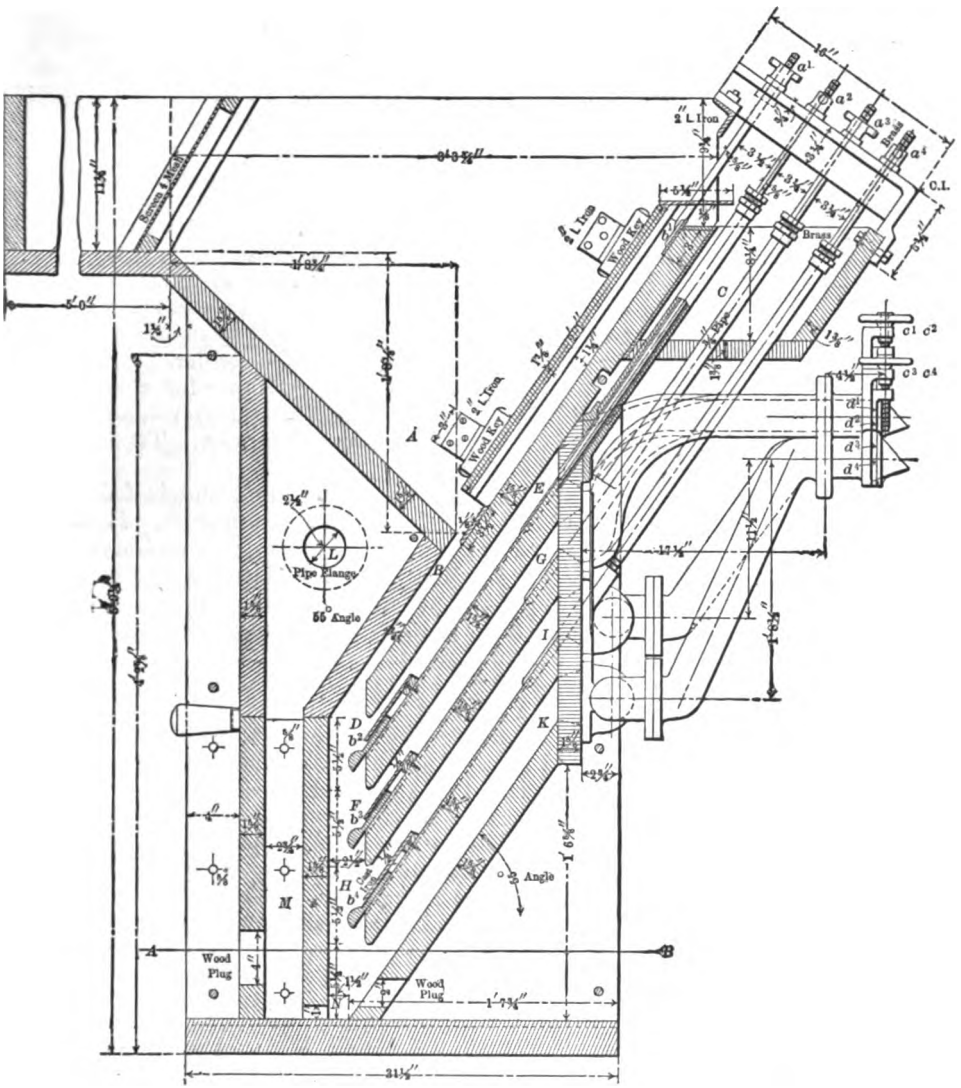

FIG. 269*b*.—LONGITUDINAL SECTION OF MEINECKE CLASSIFIER.

sort, a little heavier than the first, and carries it out by a side discharge *E* provided for the purpose. A third and fourth sorting columns *F* and *H*, lift out two more sorts by side discharges *G* and *I*, and the heaviest grains pass down through the fourth sorting column and are lifted out through the side discharge *K*.

The hydraulic water, the quantity of which is regulated by a cock, enters under a considerable head by the pipe *L*, passes down through the chamber *M*, which harmonizes currents and gives uniform motion to the water. The whole hydraulic water then passes through a slot *N* running the whole width of the apparatus beneath the fourth hydraulic column *H*. It then rises through the fourth, the third, the second and the first sorting columns successively, parting with a portion of its volume at each of the successive side discharges. The velocity of the rising current in any sorting column can be increased by diminishing the width of the column and by contracting the side discharge orifice next below it. For the former adjustments, thumb nuts a^1, a^2, a^3 and a^4, to move gates b^1, b^2, b^3 and b^4, are provided, and for the latter, hand screws c^1, c^2, c^3 and c^4, to move gates d^1, d^2, d^3 and d^4, are provided.

While the ordinary form of classifier takes out the heaviest grains first and passes the mass of lighter grains forward for further classification, this apparatus does the exact opposite, in that it takes out the lightest grains first and passes the mass of heavier grains forward for further classification.

Again, since classification undoubtedly takes place in the discharge chambers *E, G, I* and *K*, which are enclosed by four walls, to quite as great a degree as in the *spitzlutte*, the apparatus deserves to be regarded rather as a special form of tubular classifier, than as a special form of hydraulic classifier.

According to Bellom,[49] it treats 10 liters of pulp per minute for a centimeter of inside width, the water containing 6 to 8% of solid matter by volume. This, for 20 inches' width, would be 500 liters pulp fed per minute. To this must be added the whole of the hydraulic water.

In Mill 27 the No. 1 hydraulic classifier is of this kind, and is fed by the undersize of No. 8 trommel with holes $\frac{5}{64}$ inch (2 mm.) in diameter. It delivers products of the side discharges to unwaterers and thence to jigs, and overflow to No. 1 whole current box classifier. In Mill 28 No. 1 classifier is also of this pattern, of the size shown in the figure, and is fed with the undersize of No. 7 and No. 9 trommels and with pulp from the Huntington mill, all having 2-mm. diameter maximum grain. It delivers products of side discharges to jigs by unwaterers, and overflow to No. 1 surface current box classifier. It formerly went to a Meinecke *spitzlutte*. The quantity of water used is so large that unwaterers are used in both mills, to prepare the products to be fed to the jigs. The apparatus is reported as hard to regulate and lacks simplicity.

The large quantity of water used in this apparatus appears to be due to the fact that carrying currents pass up from the four sorting columns to the side discharges. These are as large as those of a series of *spitzlutten*, but in the latter, the same water acts successively in all these rising spaces, while in this apparatus, they all must receive separate supplies of water.

For the quality of work done by this classifier in Mill 28, see Table 254.

Groups IV., V. and VI.

IV. Surface current box classifiers.
V. Whole current box classifiers.
VI. Distributing boxes.

§ 326. General.—These three groups will be treated somewhat together, because the mill men of the country are using one or other of them for the same class of work. They all omit the hydraulic current and depend upon the behavior of grains of sand or slime in a carrying current of water, which, in the majority of cases, is horizontal. The faster the current moves, the further will the grains be carried. The slower, the earlier will they settle. The various forms of apparatus have been designed according to their ability to accelerate

or retard the settling of the sand. They treat slimes which overflow the last of the hydraulic classifiers, and the practice in regard to the size treated is quite variable in this country. The maximum grain, as a rule, ranges from 0.02 inch (0.5 mm.) to 0.01 inch (0.25 mm.) in diameter. Linkenbach recommends 0.25 mm. as the proper size for this treatment. Their products, with a few exceptional cases, are suitable for treatment on tables and vanners.

The hydraulic is omitted from these groups for the following reason: The process has, up to this point, been adding water to the pulp at every step. It is advisable from this point on, to distribute the pulp without further addition of water, unless the consequent sacrifice of fine slime which passes down with the spigot product and is lost in the subsequent concentration, is too great. The spigots used with the box classifiers are similar to those used in the hydraulic classifiers. They are chiefly the pipe and plug spigot and goose neck. Of these, the latter finds more application here than with the hydraulic classifiers, owing to the great depth of these boxes and to the fact that the slimes flow more freely than the coarser sands of the former class. A most excellent device is a large screen with holes 1 mm. in diameter, to screen out the fibre from all the pulp running to box classifiers. This allows the use of small spigots and of concentrated pulp in the spigots. It will be some trouble to keep this screen clean, but the additional ore saved may much more than offset it.

The capacity of a box classifier is measured by the quantity of water, rather than by the quantity of dry slime fed to it. To do its best work, it must have the right quantity of water to establish its regular washing currents. The conditions of the hydraulic classifier are such that it will never send pulp that is too dense for treatment in a box classifier. The overflows of hydraulic classifiers probably contain less than 3%, and in some mills they will not have over 1% of solid dry slime.

There are two logical methods of supplying and using the carrying current, namely, a *surface current* flowing over a stagnant bottom, and a *whole current* in which all the water is moving at a nearly uniform rate from the receiving end to the delivering end of the box.

IV. Surface Current Box Classifiers.

§ 327. General.—This group includes Rittinger's *spitzkasten* apparatus and all the various forms of apparatus in which the sorting is done by Rittinger's surface current, without the hydraulic current or the plunging feed. They resemble, in figure, many of the forms included under deep pocket hydraulic classifiers, only they are made larger, and are used for treating finer products. In these classifiers there is a reason which is additional to those already given, for omitting the hydraulic water, for a positive rising current of hydraulic water cannot be used without making troublesome banks (see § 310). The omission of hydraulic water causes each spigot product to be more or less contaminated with fine slimes, which properly belong in later spigots or in the final overflow.

If a horizontal current of pulp passes over the surface of a tank of stagnant water, all of the particles contained in the pulp begin to settle, and they do so according to the law of free settling particles. Those having the greatest settling power fall out first, and those with less, later, ranging in a series from the beginning to the end of the current, according to their settling power in water. If now, we divide up the current, so that it takes place in a series of boxes, each a little wider than the previous, we can obtain from the set so arranged, a series of products each of which is finer in size than the one preceding it, and the grains in these products are arranged approximately acording to the law of free settling particles, namely, the quartz, for example, in any product, will be larger

in diameter than the galena. Theoretically, this horizontal current seems to be a very perfect means of sorting slimes; practically, it is capable of doing only approximate work, and it can only do this when the laws controlling it are understood.

§ 328. METHOD OF INVESTIGATION.—In order to study these laws an investigation[39] was made by the author, assisted by Mr. Locke. This investigation required some means of coloring the liquid composing the surface-current, of seeing it when it has been colored, and of picturing it for further study and comparison. Milk of lime, added to the water, was found to be the best coloring matter; a tank with one side of plate-glass permitted the colored current to be seen, and photography furnished the means of preserving its form, so that it could be studied at leisure.

The tank (see Figs. 270-273), which served for a pointed box, was 1,206 mm. long, 603 mm. deep and 203 mm. wide (inside measures). The outlet was 60 mm. below the top of the tank. It had a plate-glass front, and was otherwise painted black inside. Within it were two adjustable cross-partitions, 431 mm. long and 203 mm. wide, usually sloping 58° from the horizontal. One, called the tail-partition, sloped downward and inward from the outlet; the other, called the head-partition, sloped downward and inward from the end of the feed-sole at the inlet. Both were beveled, to give a sharp, true edge of contact. They were loaded with lead, to sink them; suspended by fine wires, to support them; and wedged in place and made practically water-tight at the sides by tacking on a strip of gunny-sack. The feed-sole, 305 mm. long by 203 mm. wide, was packed and held by the same means as the partitions. Water was brought by two hose-pipes and distributed by two pipes with many holes, to give an even current. Thus made, the box classifier was like the Rittinger *spitzkasten* in every respect, except that it had no spigot to discharge water below and its sides were vertical (which, indeed, is the case also in some of Rittinger's boxes).

As representing nearly the speeds of the three boxes of Linkenbach for a width of 203 mm., three rates of current were selected, namely, 86.4, 57.3 and 38.6 kilos of water per minute respectively.* In each experiment, the feed-sole and the partitions were adjusted as desired; the water-quantity was weighed, using a bucket and spring balance; the water-current was allowed to establish itself thoroughly; the milk of lime was added till it had just defined the main currents; and the flash-light picture was then taken. Figs. 270, 271, 272 and 273 are copies of a few of those taken during the investigation. They show that the current is not of equal section and velocity, but is in the form of a wedge, widening downward and diminishing in velocity as it moves onward, and when it reaches the overflow it has received so much added water from the stagnant pool, that only the top portion of the current can pass off by the overflow; the rest passes down as a return eddy, disturbing the stagnant pool and sending fine slimes into the spigot product, which belonged in the overflow.

§ 329. RESULTS OF THE INVESTIGATION.—The following considerations, derived from the above investigation, show how the quality of the work is affected according as the formation of a uniform current is helped or hindered: (1) The relative height of feed-sole and overflow. (2) The slope of the feed-sole. (3) The quantity of pulp per unit of width.

In regard to the height of the feed-sole, the experiments of the author corroborate the position held by Rittinger, namely, that the surface of the feed-sole at the junction with the box should be exactly level with the overflow. If it is 25.4 mm. above the level, a plunging stream (see Fig. 273), which seeks the bottom of the box, will be obtained; less elevations will tend in the same direc-

* The exact figures should have been 89.1, 59.3 and 39.5 kilos for the width of 203 mm. The error was made by accident, but the difference is of no moment in this connection.

tion to a less degree. If it is depressed 25.4 mm. below the overflow, the velocity is greatly retarded and the current wedge widened; less depressions have the same effect to a less degree.

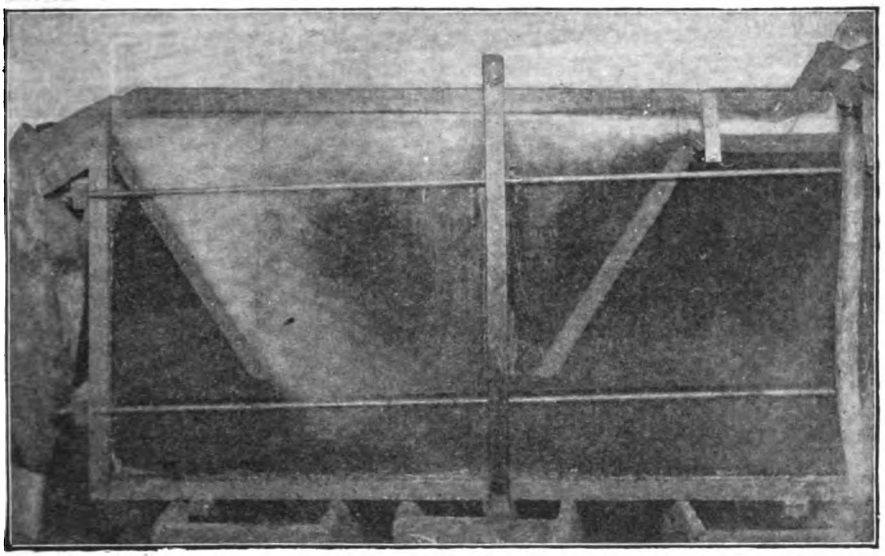

FIG. 270.—FEED HORIZONTAL AND LEVEL WITH OUTLET. CURRENT, 86.4 KILOS PER MINUTE. WEDGE ANGLE, 10°.

In regard to the slope of the feed-sole, it is found that if it is horizontal, an irregular bank of sediment will settle upon the feed-sole, deranging the evenness

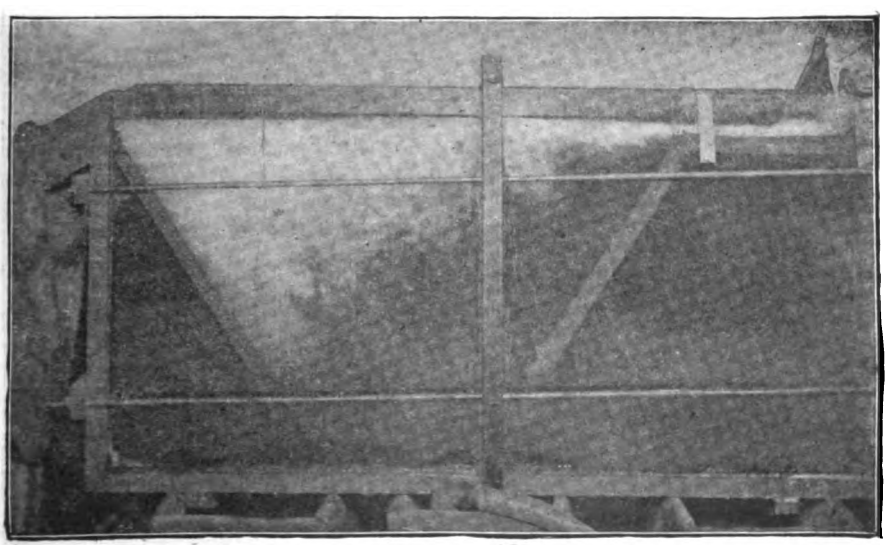

FIG. 271.—FEED HORIZONTAL AND LEVEL WITH OUTLET. CURRENT, 38.6 KILOS PER MINUTE. WEDGE ANGLE, 20°.

of the work; if it is too steep, the current takes with it too much eddy water, thereby slowing the current and widening the wedge; if its slope angle is greater

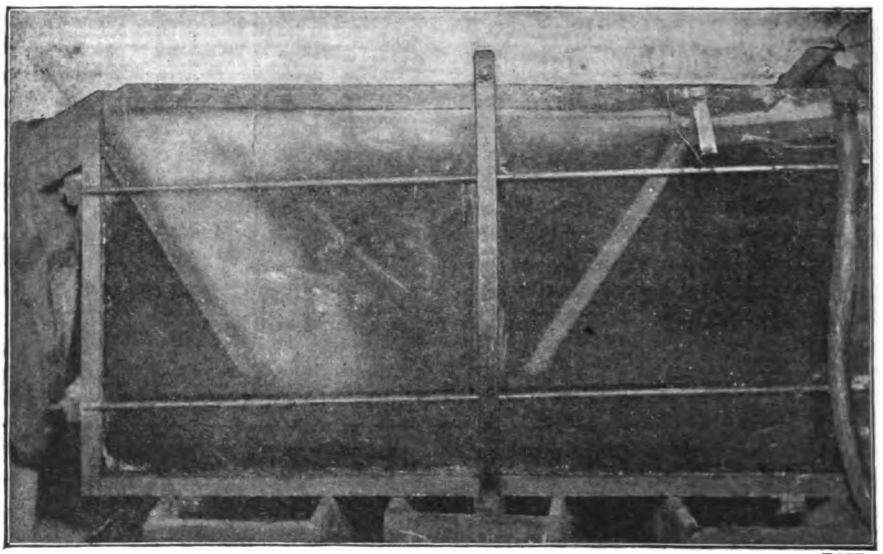

272.—FEED SLOPING 5°; LEVEL WITH OVERFLOW. CURRENT, 86.4 KILOS PER MINUTE. WEDGE ANGLE, 6°.

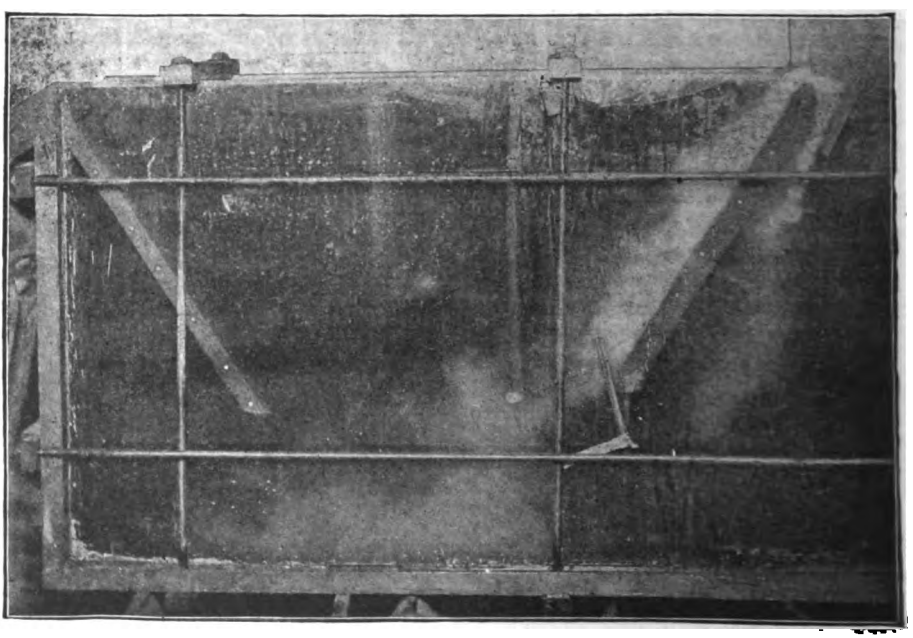

FIG. 273.—FEED HORIZONTAL; ELEVATED 25.4 MM. CURRENT, 86.4 KILOS PER MINUTE.

than half of that made by the surface of the water with the plane of the head end of the box, then the current will dive down and hug the head end of the box. The slope angle of the feed-sole, which gives the best results is 5°, possibly varying to 10°. Compare Fig 272 with 270 and 271, with all the different water quantities. It gives the highest speed of current, the narrowest wedge angle and no sediment on the feed-sole. On the other hand it is true that the higher the velocity of the water, the narrower will be the wedge angle. It is also true that the 5° feed slope appears to reach a minimum in this respect, and when high speed of water was attained by using a cycloidal feed-sole with 152.4 mm. fall, no gain was found in the angle.

In regard to the quantity of pulp per unit of width, it is found that the retarding of the current and the increase of the wedge angle are less with larger and more with smaller quantities of pulp. For example, with 5° slope of feed-sole, feeding pulp at the level of the overflow, angles of the current wedge were obtained as given in Table 239. Compare also Figs. 270 and 271.

TABLE 239.—WEDGE ANGLES FOR DIFFERENT QUANTITIES OF PULP PER UNIT OF WIDTH.

Pulp per Minute per Meter of Width.	Width, Corresponding to 100 Liters Pulp per Minute.	Angles of the Current Wedge.
Liters.	Mm.	Degrees.
425.1	235.2	10
282.0	354.6	16
190.0	526.4	20

To show the proportion between the overflow and the eddy current, an approximate estimate was made of the two quantities, which yielded the values given in Table 240. These figures give an approximate idea of the amount of

TABLE 240.—SHOWING THE PROPORTIONS BETWEEN THE OVERFLOW AND EDDY CURRENTS FOR VARIOUS RATES OF FEED.

Feed Water per Minute.	Overflow per Minute.	Eddy Current per Minute.	Ratio of Eddy Current to Feed Water.
Kilos.	Kilos.	Kilos.	
86.4	86.4	132.1	1.5
57.3	57.3	258.7	4.5
38.6	38.6	226.5	5.9

water picked up by the main current, while forming the wedge, during its passage, which amount, of course, is equal to that given up in the return eddy current. It should be noted that the top of the wedge is moving much more rapidly (275 mm., 211 mm. and 179 mm. per second, for the three ratios of feed given above), than the bottom of the wedge at the widest part (76 mm., 63 mm., and 35 mm. per second). To try to reduce the eddy current, the author experimented with a horizontal board perforated with holes 6.35 mm. in diameter and 25.4 mm. from center to center, one row staggered with the next, placed over the stagnant pool, for confining the current at the surface, and finds that it largely does away with the mixing of fine silt with the spigot product, if a balanced hydraulic is used. The advantage is more marked with the higher speed than with the lower.

The author's conclusions are that the box classifier is a scientifically imper-

fect apparatus. It cannot be fed with such a product or at such a rate, or with such adjustments that it will do perfect work. There is always the return

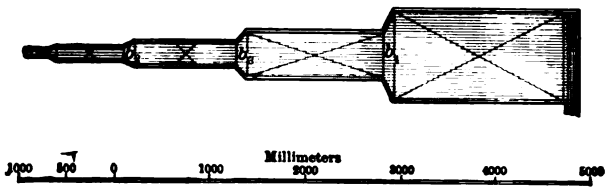

FIG. 274*a*.—PLAN OF RITTINGER'S SPITZKASTEN APPARATUS.

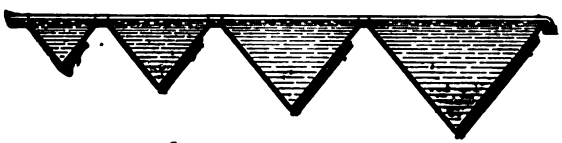

FIG. 274*b*.—LONGITUDINAL SECTION.

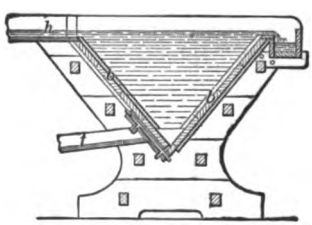

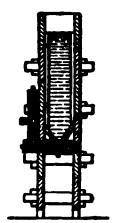

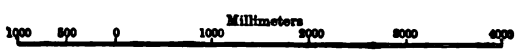

FIG. 275*a*.—LONGITUDINAL SECTION OF FIRST BOX.

FIG. 275*b*.—CROSS SECTION.

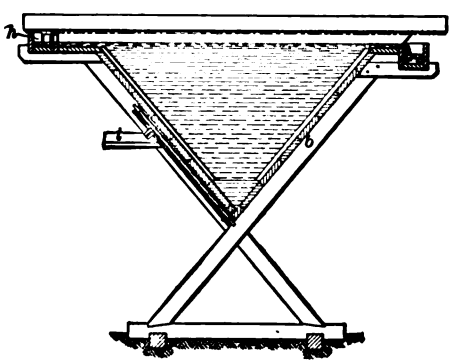

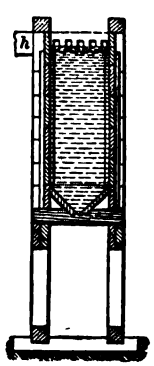

FIG. 276*a*.—LONGITUDINAL SECTION OF SECOND BOX.

FIG. 276*b*.—CROSS SECTION.

eddy current to contaminate the spigot product. In this respect it differs from the best of the hydraulic classifiers, for they can do perfect work if they are

run slowly with plenty of hydraulic water, and their departure from perfect work is due to the rush and drive to get commercial results. To get the best results from it with normal running, use 5° slope for the feed-sole, enter the feed at the level of the overflow and have the overflow perfectly level. To get the best results where it is desired to keep rich, fine slimes out of the earlier spigot products, use slightly deficient hydraulic water, which nearly supplies

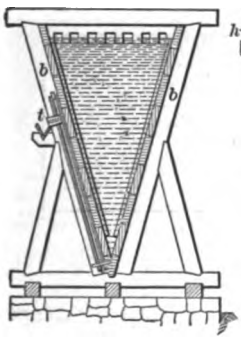

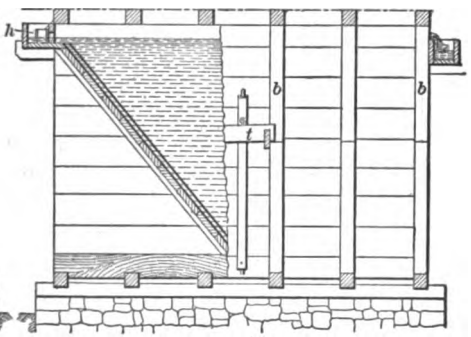

FIG. 277*b*.—CROSS SECTION.

FIG. 277*a*.—LONGITUDINAL SECTION OF THIRD BOX.

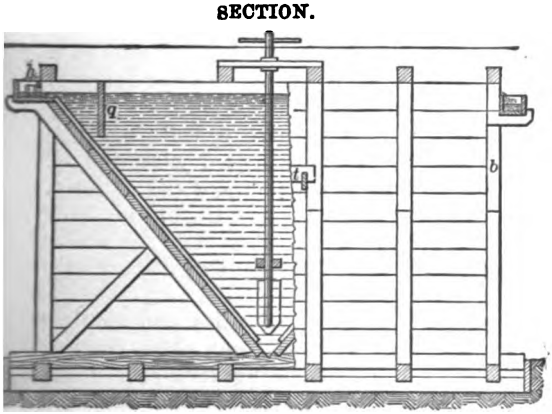

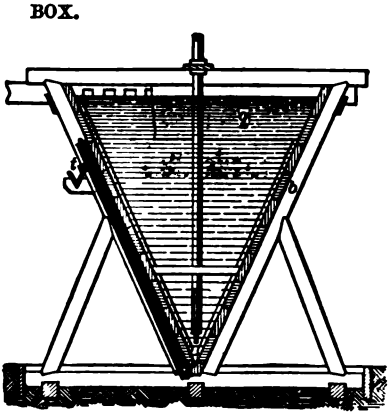

FIG. 278*a*.—LONGITUDINAL SECTION OF FOURTH BOX.

FIG. 278*b*.—CROSS SECTION.

the spigot with water. This will be commercially wise only when the fine slimes are very rich. The supply of hydraulic water is better introduced from below, so as not in any way to disturb or interrupt the surface current. The hydraulic pipe in this case is best of large size in order that the hydraulic water may have a low velocity.

Comparing a surface current with a whole current, the former stretches out the products in space to suit the positions of the machines and at the same time, gives the more perfect sorting. The machines following a surface current apparatus get the better sorted products for feed.

§ 330. RITTINGER'S POINTED BOXES OR SPITZKASTEN APPARATUS.—(See Figs. 274*a*-278*b*.)—This is a series of hopper-shaped or pointed boxes in which the

width of each is double that of its predecessor, while the lengths increase by arithmetical progression. He recommends for each Austrian cubic foot (31.5857 liters) of pulp fed per minute, a width of 0.1 Austrian foot (31.6108 mm.) for the first box and the sizes of boxes which he gives for treating 20 cubic feet (631.7 liters) per minute, making four spigot products and an overflow, are shown in Table 241.

TABLE 241.—SIZES OF RITTINGER'S POINTED BOXES.

Width of Box.			Length of Box.		
	Austrian Feet.	Mm.		Austrian Feet.	Mm.
1st box.....	2	633	1st box.....	6	1,897
2d box.....	4	1,264	2d box.....	9	2,845
3d box.....	8	2,529	3d box.....	12	3,793
4th box.....	16	5,058	4th box.....	15	4,742

The sides *b* of the boxes must slope as much as 45° with the horizontal else banks will form which are liable to slide down and choke the spigot. He recommends 50° as a good minimum slope to adopt. If the slope is steeper than 50° for the larger boxes, they become unreasonably deep and require too much mill height. If a spigot is placed at the apex, too large a quantity of discharge will be made; a rising discharge *t* (see also § 296) will be preferred. For the first spigot, the outlet of the rising discharge should be 3 to 3½ feet below the surface of the water in the box; for the last, 2 to 2½ feet.

Rittinger gives the following instructions in regard to the use of his box classifier or *spitzkasten apparat*. The feed-sole *h* must be horizontal and at a level with the overflow. The launders connecting the boxes must slope as follows: Feed to first box, 1 to 1½ inches in 6 feet; between first and second box, ½ to ¾ inch in 6 feet; between second and third box, ¼ to ½ inch in 6 feet; between third and fourth box, ⅛ to ¼ inch in 6 feet. The launders need a section of 5 square inches for each cubic foot of pulp passing through them per minute. Distributors will be needed to feed pulp evenly to the whole width of the later boxes. Where the overflow is collected in a launder across the end, the water should have a drop of 4 to 6 inches, to guarantee no backing up and disturbance in the current in the box.

In construction, No. 1 and No. 2 boxes will have vertical sides and sloping ends; No. 3 and No. 4 boxes will be hopper-form with all four sides sloping to a point. No. 4 needs a vertical gate or deflector *q* extending 18 inches down from the surface to within 6 inches of the sloping end, and placed 18 inches from the feed end. This deflector removes this box from the surface current classifiers and makes it a whole current classifier. The goose-neck spigot must not choke; it can be cleared by wire outside, by little spatula inside, or by pulling out the plugs.

The whole feed pulp may pass through a screen with 1-mm. holes to sift out coarse rock and fibre before reaching the box classifier. The apparatus should run continuously, as it requires care in starting and takes a little time to get into good running order. It should not be stopped at the moment the ore stops, as it will choke with the sediment still floating in its boxes.

The diameter of the spigot pipes must be from ¼ inch to ¾ inch, according to circumstances. The per cent. which each spigot product is of the total, may be 40 for the first, 28 for the second, 18 for the third, 10 for the fourth and 4 for the overflow; or stated in weight, the yield will be: In No. 1 spigot, 25 pounds dry slime per cubic foot of water; in No. 2, 20 pounds; in No. 3, 15 pounds; in No. 4, 10 pounds; in the overflow, 3 to 6 ounces.

Separate boxes with connecting launders (*spitzkasten apparat*) are recom-

mended, where over 10 cubic feet of pulp per minute are to be treated, and where less, the hoppers are to be made all in one tank, widening from feed to overflow (*spitzgerinne*).

If a box classifier has only a portion of the quantity of pulp it is designed for, the quantity must be brought up with clear water, or vertical longitudinal partitions 18 inches deep and not necessarily extending to the bottom, may be dropped in, using a proportional part of the boxes. In case the fine slime contaminating the earlier spigots is very rich and, therefore, causes too much loss, the use of a balanced hydraulic is recommended to supply sufficient water for the spigot discharge, but no more.

The great advantages resulting from the displacement of the labyrinth by Rittinger's *spitzkasten apparat* are: The labor of shoveling is saved by the continuous feed and discharge; the ore is not settled down hard, requiring to be softened up and diluted before its final treatment; the greasy flotation and loss, due to partial drying of pulp, is avoided.

§ 331. LINKENBACH'S POINTED BOXES, DIMENSIONS IN THE HARZ.—Linkenbach recommends for 100 liters of pulp per minute, 0.25 mm. to 0 in diameter, a box classifier with three hoppers, widening from 175 mm. at the feed end of the first to 605 mm. at the overflow end of the last (*spitzgerinne*), which has a middle width of first box of 228 mm.; of second box of 342 mm.; and of third box of 513 mm. A box classifier for 600 liters per minute would be six times those widths. The length of the boxes he makes 3,600, 4,800 and 6,000 mm. respectively, whatever may be the width. The size of the rising spigot pipes or goose-necks, is 30×30 mm., and their outlets are 600 to 700 mm. below the water level inside the boxes, the earlier deeper than the later. He recommends the 50° minimum for slope of sides, a feed sole sloping 6½° according to his drawing, and entering at the level of the overflow, cross partitions between the hoppers, which come to the level of the overflow. In case a box classifier for 900 liters per minute is wanted, in which the loss of mill height would be large, he recommends cutting down that height by replacing each hopper by several small hoppers. He would have 6 hoppers for the first, 6 for the second and 9 for the third.

In the Harz[2] a *spitzkasten* apparatus with four boxes, treating 9 tons dry weight of finely stamped ore in 24 hours, has the dimensions given in Table 242.

TABLE 242.—DIMENSIONS OF A SPITZKASTEN APPARATUS IN THE HARZ.

	Length at Water Level.	Width at Water Level.	Depth.
	Meters.	Meters.	Meters.
No. 1	1.73	0.43	1.15
No. 2	2.60	0.72	1.728
No. 3	3.46	1.296	2.304
No. 4	4.33	2.304	2.880

§ 332. SURFACE CURRENT BOX CLASSIFIERS IN THE MILLS.—Table 243 shows the box classifiers from the mills which are believed to use surface currents. The first nine and the last two in the table are practically the Rittinger pointed boxes. The remainder are V boxes, but are so short that they probably act as surface current and not as whole current classifiers. They all discharge continuously by spigots and have no hydraulic water. The slope angle of the sides and ends of the boxes is generally steeper than Rittinger's 50°.

The material fed is in almost every case the overflow of a preceding classifier. There are, however, two cases of entirely exceptional character. In Mill 31, there is one apparatus treating ore, which is fed with undersize of a 4-mm.

TABLE 243.—SURFACE CURRENT BOX CLASSIFIERS.

Abbreviations.—dis.=distributors; dis. b.=distributing box; Ft.=feet; Hy.=hydraulic; hy. cl.=hydraulic classifier; In.=inches; J. H.=jig hutches; l. d.=lower deck; mid.=middlings; No.=number; Ov.=overflow of; Rit.=Rittinger; s. c. b. cl.=surface current box classifier; sl. t.=slime table; sp.=spigots; tr.=trommel; u. d.=upper deck; Un.=undersize of; unw.=unwatering; Ver.=vertical; w. c. box cl.=whole current box classifier.

Mill No.	No. Used.	Design.	Length		Width.		Depth.		Slope of Sides.	Slope of Ends.	Diameter of Spigot.	Feed.	Destination of	
													Spigot Products.	Overflow.
			Ft.	In.	Ft.	In.	Ft.	In.			In.			
15	1	Two pointed boxes. (See Fig. A.)	3 b 10	7 3	a 3 a 5	3½ 8½	3 6	0 6	....	....	½	Ov. No. 1 hy. classifier.	(1) To No 1 table (2) To No 2 table	No. 1 w. c. box cl.
22	1	Two pointed boxes. (See Fig. B.)	3 6	4 3	a 2 a 4	11 9½	c 3 6	0 0	60°	60°	¾	Ov. No. 1 hy. classifier.	(1) To No. 1 sl. t. (2) To No. 2 sl. t.	Hy. water for jigs.
23	1	Two pointed boxes with 3 spigots in 1st and 2 in 2d.	.....		.....		.....		.....	.....	....	Ov. No. 1 hy. cl. and mid. from slime table.	(1) (2) To No. 1 slime table. (3) (4) (5) To No. 2 slime table.	Waste.
25	2	Pointed box (*d*)....	2	3	2	3	2	0	60°	60°	1	Part of J. H., 2.97 mm. to 0.	To trunking machine.	No. 2 s. c. box cl.
25	4	Pointed box (*e*)....	2	6	2	0	2	6	63½°	58½°	1	Rest of J. H. & ov. No. 1 s. c. b. cl. 2.97 mm to 0	To trunking machine.	No. 3 s. c. box cl.
25	2	Pointed box (*f*)....	4	0	4	0	6	0	64½°	64½°	1	Ov. No. 2 s. c. box classifier.	To distributors for jigs.	No. 4 s. c. box cl.
25	2	Pointed box (*g*)....	4	0	4	0	6	0	64½°	64½°	1	Ov. No. 3 s. c. box classifier.	To distributors for jigs.	No. 5 s. c. box cl.
25	2	Pointed box (*h*)....	12	0	8	0	10	0	58°	46°	1	Ov. No. 4 s. c. box classifier.	To dis. for Rit. tables.	No. 1 unw. box.
28	1	Two pointed boxes (*i*)	12	0	6	8½	3	2	42°	46½°	2	Spigots of No. 2 hy. classifier.	(1) To u. d. No. 1 slime table. (2) To l. d. No. 2 slime table.	No. 1 w. c. box cl.
31	1	V box with 3 spigots. (See Fig. C).	4	0	*j* 2 0	6 6	3	0	71½°	Ver.	1¼	Undersize of No. 2 trommel 4 mm. to 0.	(1) To No. 6 jig. (2) To No. 7 jig. (3) To No. 8 jig.	No. 2 s. c. box cl.
31	1	V box with 5 sp. (*k*). (See Fig. D).	20	0	*j* 3 0	0 6	3	0	66½°	Ver.	....	Ov. No. 1 & No. 4 s. c. b. cl.	All to No. 1 slime table.	No. 3 s. c. box cl.
31	1	Similar to preceding.	18	0	*j* 3 0	0 6	3	0	66½°	Ver.	....	Ov. No. 2 s. c. box classifier.	All to No. 1 slime table.	No. 1 w. c. box cl.
31	1	V box with 3 spigots. (See Fig. E.)	4	0	*j* 1 0	0 4	3	0	63½°	Ver.	1¼	Undersize of No. 3 trommel 2.5 mm. to 0.	(1) To No. 9 jig. (2) To No. 10 jig. (3) To No. 11 jig.	No. 2 s. c. box cl.
33	1	Tank with 6 hoppers and 6 spigots.	24	0	1	6	2	0	.....	.....	....	Ov. No. 1 hy. classifier.	(1) To dis. b. for slime table. (2-6) Not used.	No. 2 s. c. box cl.
33	1	V box with 8 hoppers.	25	0	2	3	2	2¾	63½°	.....	¾	Ov. No. 1 s. c. box classifier.	3 sp. to dis. b. for slime table 5 sp. not used.	Waste.
36	1	Two pointed boxes.	.....		.....		.....		.....	.....	....	Third sp. and ov. No. 1 hy. cl.	(1) To sl. t. or to No. 1 vanner. (2) To No. 2 vanner.	Waste.
85	1	Pointed box.....	5	0	3	6	4	0	66°	57°	....	Ov. No. 1 hy. classifier.	To No. 1 bumping table.	Waste.

(*a*) These are averages. (*b*) The total length, straight, is 13 feet 8 inches. (*c*) These are approximate. (*d*) Pointed box with feed at one end, and overflow at one side. Both are on the same level and are 10 inches wide, 7 inches high and 5 inches below the top. (*e*) Pointed box with vertical sides at the top 12 inches high. Fed at one end, and has overflow 18 inches wide and 12 inches deep. (*f*) Pointed box with vertical sides at the top 30 inches high. Fed at one end by a spout 18 inches wide and 12 inches deep. (*g*) Pointed box with vertical sides at the top 30 inches high. Fed at end over the full width. (*h*) Pointed box with two spigots and vertical sides at the top 51 inches high. Fed at end over a width of 4 feet. (*i*) Two pointed boxes with five spigots. Fed over a board, delivering backward at one end. (*j*) These two values are the top and bottom widths respectively. (*k*) This has four cross partitions, each 2 feet high.

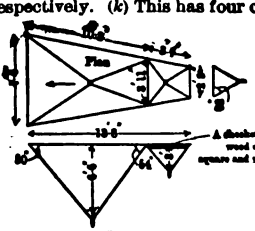

Fig. A

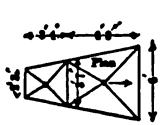

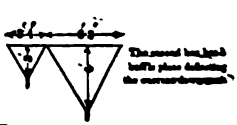

Fig. B

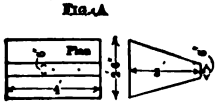

Fig. C

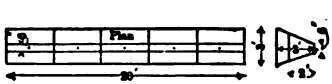

Fig. D

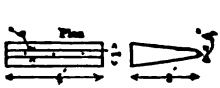

Fig. E

trommel and another treating middlings, which is fed with the undersize of a 2½-mm. trommel. In these two cases, the first spigot product will contain mineral grains as large as the largest grain of gangue; the later only will be true sorted products.

In Mill 15 the first box has a horizontal checker work of wood strips ¾×2½ inches on edge, leaving holes 1¾ inches square, which has for its object the confining of the surface current at the top of the water.

Sizing tests of the classifiers of Mills 22 and 28 are given in § 352.

V. Whole Current Box Classifiers.

§ 333. General.—The ideal classifier of this group is provided with a feed apparatus which distributes the pulp over the whole cross section, starting all parts of the current alike, and maintaining its flow at a uniform rate to the further end. It should be designed according to the rules given for settling tanks, which are preferably square with bottom divided up into small hoppers (see § 341-348).

The speed of the current is much slower than that of the surface current box, and its carrying power for the coarser grains is very much less. Grains of any specified size will, therefore, be dropped very much nearer the head end than in a surface current apparatus. If it is discharged continuously by spigots, each spigot product will be contaminated with fine slimes which belong in later spigots or in the overflow.

These classifiers in the square form, with hoppers below, are the most perfect settlers there are, but they yield the products so nearly together at the start that unless this has been allowed for in mill construction, the mill man finds his first vanner or table overloaded and his last with nothing upon it. This difficulty is easily remedied by launders, if the mill has a little height to spare, and the advantage of the good settling may be utilized in one of two ways:

(1) If it is desired to feed the machines which follow, with classified products, then the collecting launders for the spigots will run across under the tank, collecting all the No. 1 spigots together (see Fig. 279), the No. 2 together, and so on. Thus, in a case where four grades of products were being made, the first coarser product may be sent to two or more machines designed to treat it. The No. 2 spigots will probably supply one machine. The No. 3 and No. 4 spigots may need to be combined to feed one machine.

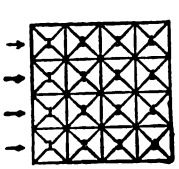

FIG. 279.

(2) If it is desired to feed whole pulp to every machine, then the collecting launders may run lengthwise under the tank and each launder receives a like quantity and size as its neighbor from its set of spigots, one each of No. 1, No. 2, No. 3 and so on, and all the machines which follow are fed alike, both as to quality and quantity of pulp. Whichever of these schemes is adopted, the overflow is thoroughly settled waste water.

Such a tank will require at the feed end a large surface of fine screen, 1-mm. holes punched in plate, to remove the fibre and chips of wood floating in the water, and a vertical screen plate, with perhaps ½-inch holes, to break up the current and start uniform velocity.

A V box may give almost equally good results if it has sufficient size, both in section and length, and has a row of spigots along the bottom. The two qualities of products may easily be obtained here as in the other case, by sending successive spigot products to the successive machines where approximately sorted products are wanted, or by collecting all the spigot products together and then distributing them where like whole pulp is desired on all machines.

TABLE 244.—WHOLE CURRENT BOX CLASSIFIERS.

Abbreviations.—c. t.=canvas tables; dis.=distributors; dis. t.=distributing tank; Ft.=feet; H.=heads of; hy. cl.=hydraulic classifier; In=inches; l. d.=lower deck; mid.=middlings; N.=none; No.=number; Ov.=overflow of; Rect.=rectangular; Rit. t.=Rittinger tables; s. c. b. cl.=surface current box classifier; set. t.=settling tank; sl. t.=slime table; Ta.=tailings of; van.=vanner; Ver.=vertical; w. c. box cl.=whole current box classifier.

Mill No.	No. Used.	Design.	Length		Width.		Depth.		Slope of Sides.	Slope of Ends.	Diameter of Spigot.	Feed.	Destination of	
													Spigot Products.	Overflow.
			Ft.	In.	Ft.	In.	Ft.	In.			In.			
15	1	Pointed box. (See Fig. A.)	8	1	2 8	1 0	4	0	65°	45°	⅜	Ov. No. 1 s.c. b.cl.	To No. 3 sl. table.	Waste.
18	1	Cone (*a*).....	*b* 8	6	.....		7	4	60°	60°	....	Ov. No. 1 hy. cl...	To vanners.....	No. 1 set. t.
19	1	A cone with 2 spigots.	*b* 8	0	.....		7	0	60°	60°	....	Ov. No. 1 hy. cl..	To vanners.....	No. 1 set. t.
24	1	Rect. box (*bb*).. (See Fig. B.)	3	5	1	2	2	3¾	Ver.	Ver.	½	Ta. No. 5 jig.	All to No. 6 jigs..	No. 2 w. c. box cl.
24	1	Rect. box (*c*). (See Fig. C.)	6	10	3	8	4	0	Ver.	Ver.	¾	Ov. No. 1 w. c. b. cl. (*cc*)	(1a) To No. 1 sl. t. (1b) To No. 2 sl. t. (2a) Not used..... (2b) To No. 3 sl. t.	No. 3 w. c. box cl.
24	1	Pointed box (*d*) (See Fig. D.)	3	8	3	8	4	0	65°	69°	⅜	Ov. No. 2 w. c. box classifier.	To No. 3 sl. t.....	No. 4 w. c. box cl.
24	1	Box (*dd*). (See Fig. E.)	11	0	5	6	5	0	65°	59½°	⅜	Ov. No. 3 w. c. box classifier.	All to No. 4 sl. t..	(*e*)
25	4	V box (*ee*).....	10	0	6	8	7	0	58½°	Ver.	¾	(*f*)	To dis. for Rit. t.	Reservoir pond.
27	2	V tank (*ff*)... (See Fig. F.)	15	0	3	8	3	9	54°	53°	*g* ½	Ov. No. 1 hy. cl.	To Woodbury vanners.	No. 2 w. c. box cl.
27	{2	V tank (*gg*)... (See Fig. G.)	18	10	6	7	7	3	62½°	Ver.	*h* 1	Ov. No. 1 w. c. box classifier.	To slime table.	Waste.
28	1	V tank (*hh*).... (See Fig. H.)	25	2	8	0	5	10	55½°	55½°	2	Ov. No. 2 hy. cl. & No. 1 s. c. b. cl.	All to l. d. of No. 2 slime table.	Waste.
30	2	V box (*i*).... (See Fig. I.)	9	4	*j* 2 0	1 7½	1	9¼	67½°	Ver.	½	Ov. No. 1 hy. cl.	(1) To No. 1 sl. t... (2) To No. 2 sl. t... (3) To Nos. 1 and 3 sl. t. (4) To No. 3 sl. t...	No. 1 dis. t.
30	1	V box with 4 spigots.	1	4	*j* 3 1	6 4	3	6	73°	Ver.	⅜	Ov. No. 1 dis. t.	(1)(2) To No. 7 van. (3)(4) To No. 8 van.	No. 3 w. c. box cl.
30	1	V box with 4 spigots.	1	4	1	6	3	6	73°	Ver.	⅜	Ov. No. 2 w. c. box classifier.	(1)(2) To No. 9 van. (3)(4) To No. 10 van	No. 1 set. t.
31	1	V box with 4 spigots.	1	4	*j* 3 0	6 6	3	0	63½°	Ver.	....	Ov. No. 3 s. c. b.cl.	To No. 2 sl. t.....	No. 2 w. c. box cl.
31	1	V box with 4 spigots.	1	4	*j* 3 0	6 6	3	0	63½°	Ver.	....	Ov. No. 1 w. c. box classifier.	To No. 2 sl. t.	Vanners.
32	1	Tanks (*jj*). (See Fig. J.)	.....		*j* 3 0	2 4	2	6	60°	Ver.	¼-⅝	Ov. Nos. 1 and 2 hy. cl.	To slime tables...	Waste.
32	1	V tank (*k*)... (See Fig. K.)	36	0	4	0	4	0	60°	Ver.	⅜	Mid. l. d. of sl. t..	(*kk*)	Waste.
35	1	Two V tanks (*l*). (See Fig. L.)	40	0	*j* 3 0	6 6	3	0	*m* 60°	Ver.	(*n*)	Ov. Nos. 1 and 2 hy. cl.	(*nn*)	Waste.
38	*o*	V tank with 4 spigots (*oo*).	4	6	*j* 4 2	0 0	4	0	76°	Ver.	⅜	(*p*)	To slime tables...	Waste.
38	1	V tank with 4 spigots.	17	0	4	0	4	0	.....	Ver.	⅜	(*pp*)	To slime tables...	Waste.
39	4	V tanks (*q*). (See Fig. M.)	16		*j* 4 2	0 0	6	0	53° Ver.	Ver.	¼-½	Ov. No. 2 hy. cl...	(*qq*)	Waste.
39	5	V tank (*r*). (See Fig. N.)	12	0	*j* 4 0	8 9	4	0	63½°	Ver.	....	Ov. No. 4 hy. cl..	To vanners.....	Waste.
40	*s*	V tank with 8 spigots (*ss*).	12	0	*j* 4 0	0 6	5	9	73°	Ver.	⅜	Ov. Nos. 1 and 2 hy. cl.	To vanners.....	None.
41	1	Tank with 8 cross V's (*t*).	14	0	25	0	3	0	Ver.	60°	....	Ov. Nos. 2 and 5 hy. cl.	To vanners.....	No. 2 w. c. box cl.
41	1	Tank (*u*). (See Fig. O.)	.....		.....		.....		*m* 75°	Ver.	....	Ov. No. 1 w. c. box classifier.	To vanners.....	No. 1 set. t.
42	*v*	V tanks, each with 4 spigots	18	0	5	0	5	0	.....	.....	½-¾	Ov. hy. cl.....	To slime table....	No. 1 set. t.
43	1	A V tank (*w*). (See Fig. P.)	16	0	3	6	4	3	60°	Ver.	3/16, ½, 7/16, 5/16	Spigot of No. 1 unwatering box.	(1) To No. 1 table. (2) To No. 2 table. (3) To No. 3 table. (4) To No. 4 table.	No. 2 w. c. box cl.
43	1	V tank (*x*)....	36	0	3	2	3	4	60°	Ver.	½	Ov. No. 1 w. c. box classifier.	To 3 vanners.....	No. 1 set. t.
78	1	Rect. tank (*y*).	12	0	1	6	2	0	Ver.	Ver.	N.	H. 1st set of c. t..	(*z*)	2d set of c.t.

(*a*) Cone with feed about 6 inches above overflow (see C, Fig. 246). (*b*) Diameter. (*bb*) Rectangular box with a cross dam 21¼ inches high and a vertical deflector 1 inch thick and 8 inches deep placed 10 inches from the feed end. (*c*) Rectangular box with a cross dam to its full height and four spigots. (*cc*) Middlings of slime table are also fed to second compartment. (*d*) Pointed box with one end vertical, one end sloping 47½° and each side sloping 65°. (*dd*) Box with two compartments each with one side vertical, one side sloping 40° and each end sloping 59½°. (*e*) Sometimes to No. 1 settling tank but usually to pond. (*ee*) A V box with 1 spigot. Ends are vertical and sides are vertical for 19 inches and then slope 58½° to the bottom. (*f*) Spigot of No. 1 unwatering box and middlings of No. 1 and No. 2 slime tables. (*ff*) A V tank with hoppers. (*g*) This also

has a ¾-inch goose neck which is not used. (*gg*) A V tank with 5 spigots and no hoppers; the sides are vertical for 12 inches from the top; the feed launder is at one end and is 24 inches wide and 3 inches deep; the overflow is over the whole width of the other end and is 3 inches deep. (*h*) This is a goose neck. (*hh*) A V tank with 5 spigots; it is fed by a transverse launder with forward pointing auger holes. (*i*) A V box with three cross partitions and a catch hopper at the end; partitions do not extend to the bottom; water is 4 inches deep over the first partition and 3 inches over the last. (*j*) These two values are the top and bottom widths respectively. (*jj*) Four tiers of tanks all with the same cross section and with several spigots in each tank. (*k*) A V tank with four compartments and sixteen spigots. (*kk*) Each compartment feeds a vanner. (*l*) Two V tanks side by side with twenty-four spigots. (*m*) Approximately. (*n*) ⅛ inch for first tank, ¼ inch for second tank. (*nn*) (1—6) to No. 1 slime table; (7—12) to No. 2 slime table; (13—15) to No. 1 vanner; (16—18) to No. 2 vanner; (19—21) to No. 3 vanner; (22—24) to No. 4 vanner. (*o*) Two sets with 4 in series in each set. (*oo*) A V tank with 4 spigots; a 6-mesh screen catches sticks in the feed. (*p*) Overflow of No. 1 unwaterer, of Nos. 1 and 2 hydraulic classifiers and second hutches of Nos. 8 and 12 jigs. (*pp*) Overflow of Nos. 3 and 4 hydraulic classifiers and No. 3 unwatering box. (*q*) V tanks with one side vertical; there is a distributor, 2 feet 6 inches long, 20 inches wide and 2 feet deep for each two tanks; each tank has three spigots. (*qq*) Each tank feeds four vanners. (*r*) A V tank with two spigots. (*s*) Two in series. (*ss*) A V tank with eight spigots and three cross partitions with openings in them 6 inches above the bottom of the tank 12 inches high and extending the width of the tank. (*t*) A tank with eight cross V's on the bottom about 1 foot 9 inches deep; a distributor feeds over the whole 25 feet at one end; there are six spigots in each V but only those in the first three V's are used. (*u*) Tank with two cross gates and one cross dam and with four spigots. (*v*) Four sets with four in series in each set. (*vv*) A V tank with four spigots; hoppers formed by mud reach to within 18 inches of the top of the water. (*x*) A V tank with twelve spigots of which every fourth one runs at a time while the other nine are catching settlings. (*y*) Rectangular with a dam 2 feet from the feed end and 2 feet below the top, making two compartments. (*z*) Each compartment separately to a vanner.

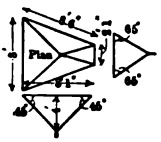

FIG. A

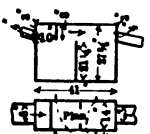

FIG. B

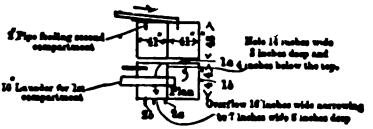

FIG. C

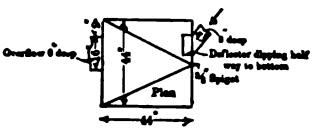

FIG. D

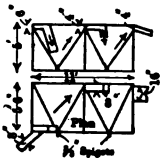

FIG. E

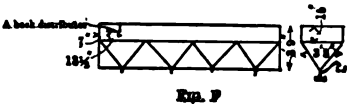

FIG. F

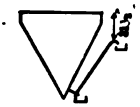

FIG. G

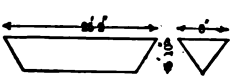

FIG. H

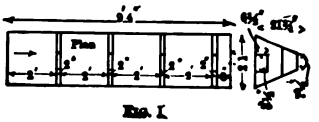

FIG. I

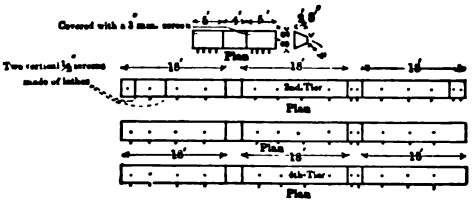

FIG. J

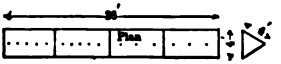

FIG. K

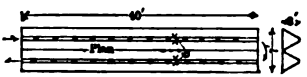

FIG. L

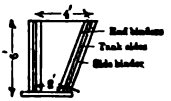

FIG. M

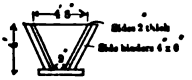

FIG. N

FIG. O

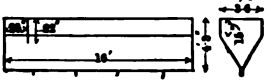

FIG. P

Where wooden hoppers are not provided on the bottom of rectagular tanks, or where V tanks are used and these tanks have spigots for continuous discharge distributed over the bottom, then the sediment will shortly make its own hoppers with almost the same regularity as those made of wood. These sand or slime hoppers are, however, not regarded with favor, as they are liable to petty land slides, which may cause derangement and temporary clogging of the spigots.

§ 334. DATA FROM THE MILLS.—In this group, however, the author is forced to place a great variety of irregular current classifiers which only imperfectly realize the ideal whole current (see Table 244). Many of them use plunging streams which give a rapid current along the bottom toward the tail, favoring the holding of particles in suspension for the purpose of distribution and, therefore, hindering settling. Some of them give surface currents which rush toward the tail until dissipated, but their forms are not calculated to realize the advantage of surface currents, if that was their purpose. Others seek by

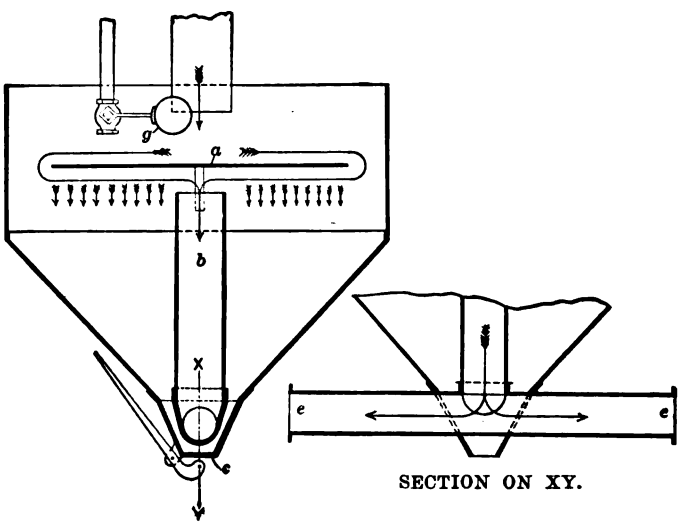

FIG. 280.—SKETCH OF ERSKINE RAMSEY SLUDGE TANK.

other means the accomplishment of the same result; for example, Mill 24 uses a series of four tanks, the feed to each of which has a tube or deflector to force a strong current to the bottom, and thereby prevent quiet settling, while favoring distribution. Mill 40 has cross partitions with openings in them near the bottom. These hasten the current and prevent settling, again favoring distribution. The idle top in this case has the further curious effect that the surface water is almost perfectly clear, it having no office to perform. Mill 30 has cross partitions with notches cut in the top and holes left at the bottom, both for hastening the current to prevent settling, and favoring distribution. In all cases, except Mill 78, the discharge is by a continuous spigot.

Sizing tests of the products of the classifiers in Mills 28, 30 and 38 are given in § 352.

§ 335. THE RAMSEY SLUDGE TANK (see Fig. 280), used for removing waste from fine coal, is worthy of being brought to the notice of concentrating works. It consists of a short vertical cylinder with a conical bottom and a gate *c*, at the apex, for removing the sludge. Near the top is a circular deflecting plate *a*,

to distribute radially the water and sludge. Above it is a vertical pipe for feeding the same, and beneath it a vertical discharge pipe *b*, leading to pulsometer steam pumps. A fresh water pipe with a regulating ball cock *g*, is also provided to furnish additional water in case the quantity falls off. The water currents are indicated by the long arrows and the falling sludge by the short arrows. The principle of distributing and settling appears to be very perfect. It yields slate and pyrite in the sludge, while the lighter coal is carried over through the pulsometer pumps to a Robinson coal washer.

§ 336. BÜTTGENBACH'S SEPARATOR, used at Tarnowitz, belongs in this group. This is a box about 1 meter square at the top, 1×2 meters at the bottom and about 2 meters high (see Figs. 281*a* and 281*b*). In it are four hoppers, each about 1 meter square; the lower two, *Ia* and *Ib*, are side by side, the other two, *II* and *III*, are above them, and one over the other. The pulp enters the lower two through a column tube *i*, being divided equally between them, then rises over the side of the third and finally over the fourth, overflowing from it and delivering a spigot product from each of the four boxes, the first two being alike and mixed together. It is fed with 2-mm. stuff at the rate of 1.7 cubic meters (1,700 liters) pulp per minute, containing about 27 kilograms of solid material. The stuff in the first two boxes is between 2 and 1 mm. in size.

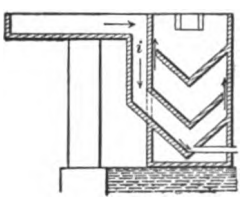

FIG. 281*a*.—LONGITUDINAL SECTION OF BÜTTGENBACH'S SEPARATOR.

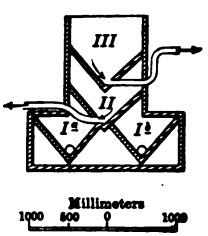

FIG. 281*b*.—CROSS SECTION.

About 18 kilograms are discharged from the first two and the rest from the last two spigots and overflow. The apparatus is compact, but not convenient to control.

§ 337. LABYRINTHS AND RUNS are whole current box classifiers in which the settled product is allowed to accumulate, the apparatus being stopped periodically for its removal. It is difficult to draw lines and give exact definitions of the apparatus included under this head, since writers differ somewhat. The author will use the word labyrinth to signify those long, narrow, shallow boxes which increase in section in series and each successive member of which is fed by the overflow of the predecessor. They act upon the principle of free settling particles. He will use the term run to signify those boxes of like form which have the tail built up by additions, as the sand builds. These depend in the main upon the free settling conditions, but instances may be found where, by lessening the water, widening the box or steepening the slope, they become more like tyes (see § 507), which act by the sizing action of a film of water.

Such forms as these, which come between the deeper settling box and the shallower tye, must of necessity have a conflict of two opposite principles, namely, that of the settling tank, which settles the largest particle at the earliest point, and that of the film sizing buddle, which rolls the largest grain to the furthest point.

The labyrinth is practically out of date now, but as it does exist in some places, for example, in Cornwall, an instance is given.[2] It is composed of the following parts arranged in series which, after being charged with sand or slime, must be stopped and shoveled out.

1st. Two shallow troughs in series, each 4 to 6 feet long and 10 inches wide, the head end being deeper than the tail. The first yields coarser sand, the second, finer material.

2d. A number of troughs in series, each 12 inches wide, 12 inches deep, the total length being 90 to 100 feet. The width may increase toward the tail. The first trough may slope slightly, say 0.06 or 0.07 inch per foot, and the last one not at all, or they may all have no slope.

3d. Boxes, 6 to 10 feet square and 3 feet or more deep, there being three or four of them in series.

4th. Boxes similar to the preceding, but of larger dimensions.

5th. Two reservoirs, each with an area of several hundred square yards, may also be needed. If these are used, some of the other boxes may be omitted.

The disadvantages of this apparatus are: (*a*) It is an intermittent washer. (*b*) The shoveling is expensive. (*c*) The settling makes compact masses which must be wetted again for subsequent treatment. (*d*) The partial drying causes loss by greasy flotation. In case it is desired to run continuously, a duplicate set is necessary, one set being filled while the other is being cleaned out.

§ 338. RUNS formerly had an extensive application, but to-day they are found in but a very few mills in places where it is desired to extract a small amount of partially concentrated material from a large amount of low grade sand. They have the same disadvantages as labyrinths.

As described by Rittinger, for use on sand up to 1 mm. diameter, the runs should be 10 to 12 inches deep and should have at the head ends, gates elevated 2 inches, followed by dams 3 inches high, to get even distribution. At the tail end, the dam is built up of 1-inch square pieces running across and held in place by cleats on the sides. A new piece is added as soon as the building of the sand demands it. The sizes recommended for each cubic foot of pulp fed per minute, are given in Table 245. The tail of No. 1 box should be above the feed of No. 2 and so on.

TABLE 245.—SIZES OF RUNS FOR EACH CUBIC FOOT OF PULP FED PER MINUTE.

	Width.	Length.	Slope in 12 Feet.
	Feet.	Feet.	Inches.
First box	1/6	12	1 1/4
Second box	3/4	18	Level.
Third box	1 1/6	24	Level.
Fourth box	1 1/11	30	Level.

In Mill 45, the tailings of the finishing jigs go to two No. 1 runs, the overflows of which go to one No. 2 run. The dimensions of these are given in Table 246. They yield settlings to jigs and final overflow to waste.

TABLE 246.—RUNS IN MILL 45.

	Length.		Width.		Depth.		Slope.		Interval of Cleaning.
	Ft.	In.	Ft.	In.	Ft.	In.	Deg.	Min.	Hours.
No. 1 run	12	3	2	0	1	1 1/6	1	35	6
No. 2 run	53	0	2	7	0	11	0	45	24

Mill 79 has a rough form of classifier without hydraulic water, and with a

whole current, and it is somewhat similar to tyes and runs in its action. It consists of a launder 15 feet long, 16 inches wide and 16 inches deep. Vanner tailings are fed at the middle and flow toward the two ends, discharging graded products through 1-inch holes, of which there are six distributed through the length of each half and one in the middle, thirteen in all. These products go to 13 riffle boxes, where some of the heavier stuff is caught, while the lighter material passes over to three other classifiers similar to the preceding. The one for the coarser material is 30 feet long, 10 inches wide and 13 inches deep. The bottom is level and has sixteen holes in it, each 1 inch in diameter, which deliver graded products to sixteen canvas tables. The two classifiers for the finer material have no slope and are each 42½ feet long, 10 inches wide and 13 inches deep and each has 23 holes 1 inch in diameter for spigots with a dam or riffle block 1 inch high and 1 inch thick, running across the trough just beyond each hole. The water is 3 inches deep at the head end and 2⅛ inches at the tail. The products of these spigots go to 46 canvas tables.

VI. Distributing Tanks.

§ 339. These are usually long tanks fed at one or more points along the side (see Table 247). They give a simple way of getting like quality and quantity of whole pulp to a number of slime machines, but they tend to give a rich, unsettled overflow. All the distributing tanks in the table are of V section and discharge by continuous spigots. The author is in doubt as to whether the tank of Mill 46, Table 247, may not belong in whole current box classifiers. The capacity of these tanks is unknown, but the reader can get an idea of the quantity of ore and the number and kind of machines which contribute the pulp, by consulting the scheme of mills, Chapter XX. The capacity of each tank in Mill 48 is 40 tons dry weight per 24 hours.

TABLE 247.—DISTRIBUTING TANKS.

Abbreviations.—Ft.=feet; hy. cl.=hydraulic classifier; In.=inches; M.=middlings of; No.=number; Ov.=overflow of; sl. t.=slime tables; Ver.=vertical; w. c. box cl.=whole current box classifier.

Mill No.	No. Used.	Design.	Length		Width at Top.		Width at Bottom		Depth.		Slope from Horizontal		Diameter of Spigots	Feed.	Destination of	
											of Sides.	of Ends.			Settlings.	Overflow.
			Ft.	In.	Ft.	In.	Ft.	In.	Ft.	In.			In.			
30	1	A V tank (*a*). (See Fig. A.)	60	0	4	0	1	3½	3	6½	69°	Ver.	⅝	Ov. No. 1 w. c. box classifier.	To 6 vanner	No. 2 w.c. box cl.
34	1	V tank (*b*)...	90	0	2	3	0	5	2	6	70°	Ver.	⅝	Ov. No. 1 hy. cl..	To 4 sl. t...	Waste.
34	1	V tank (*c*)...	90	0	2	3	0	5	2	6	70°	Ver.	⅝	Mid. sl. table	To 7 vanner	Waste.
44	11	A V box (*d*). (See Fig. B.)	9	6	4	5	0	6½	3	6	61°	Ver.	½	Ov. No. 1 hy. cl..	To sl. t.....	Waste.
46	4	A V tank (*e*)..	15	0	4	0	1	9	4	0	74½°	Ver.	....	Ov.No. 1 hy.cl.(*f*)	To sl. t.....	Waste.
47	6	V tanks (*g*)...	(*h*)		4	6	1	3	4	0	68°	Ver.	1	(*i*)	To sl. t.....	Waste.
48	*f*9	(*k*)(See Fig.C)	14	0	4	6	2	6	6	0	81½°	Ver.	(*l*)	Ov. No. 1 hy. cl..	To sl. t. (*m*)	Waste.

(*a*) A V tank with 12 spigots. Fed at side by three distributing boxes each 8 feet long, 8 inches wide, 4 inches deep, and feeding over a straight edge 8 feet long. (*b*) A V tank with 36 spigots. Fed over the side at various points. (*c*) A V tank with 40 spigots. Fed over the side at various points. (*d*) A V box made of 2-inch plank; one for every steam stamp. (*e*) A V tank with two or three spigots. (*f*) Also, middlings of table; settlings of No. 2 settling tanks; kieve tops. (*g*) V tanks with four spigots; larger ones are fed at middle and overflow the ends; smaller ones fed at one end and overflow at the other. (*h*) Two are 20 feet and four are 16 feet. (*i*) Five treat overflow of No. 1 hydraulic classifier; one treats kieve tops and table middlings. (*j*) There are two for each of four steam stamps and one for one steam stamp. (*k*) Each tank has four spigots and two hydraulic classifiers feed each tank. (*l*) Each tank has two ½-inch spigots and two ⅝-inch spigots. (*m*) A ½-inch and a ⅝-inch spigot to each table.

Fig. A

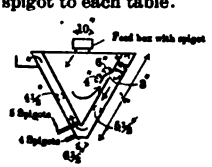

Fig. B

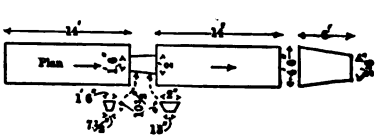

Fig. C

At Friedrichessegen an apparatus is used with 48 pointed boxes in two rows, side by side. The pulp moves forward through 24, and returns through 24. Each box is 5 feet long, 6 feet 4 inches wide and 6 feet 8 inches deep. Each box, after the first four, has at 95 mm. below the surface of the water, a pipe for taking off surface water to be carried back and used on the slime tables. In this way, the need for widening the boxes is avoided. The spigot products are grouped, taking four spigots from each row to contribute to each product; for example, the first product receives pulp from Nos. 1, 2, 3, 4, 45, 46, 47 and 48 spigots; the second from Nos. 5, 6, 7, 8, 41, 42, 43 and 44 spigots, and so on. While the pointed boxes would naturally place it among surface current box classifiers, the mode of combining the spigot products undoes this work and the apparatus appears, therefore, to be more of a distributing tank.

VII. Unwatering Boxes.

§ 340. These are used to lessen the water carried by an unfinished product, which may range up to quite coarse sand (see Table 248). As a rule, the spigot product contains all the value. The overflow is thrown away, unless the water is to be saved and used over. As their sole use is to settle the sands, without any attempt at classification, the ideal design should use a whole current. The great variety of designs found in the mills show that this plan has not been adopted as a rule, and the unwaterers are, therefore, often larger than is needed, although smaller than the classifiers of groups IV., V. and VI. They may be used to unwater the earlier spigots of a classifier previous to jigging. They may unwater the tailings of an earlier jig sieve before feeding them to the later sieve. They may unwater the feed pulp of a classifier (see Mills 25, 41 and 43), in which case the overflow may be of value and is treated accordingly. They may unwater the middlings or tailings of jigs preparatory to recrushing. They may unwater the middlings of slime tables preparatory to finishing them. The designs given in Table 248 all discharge continuously by spigots, except two (Mills 87 and 88), and from these the sand is easily shoveled to stamps. A sizing test of the overflow of an unwatering box in Mill 38 is given in § 352.

The Mayflower mill of Colorado uses the boot of its elevator box as an unwaterer for the tailings of jigs, the fine overflow being sent to amalgamated plates, and the coarse elevated to stamps.

VIII. Settling Tanks.

§ 341. General.—These are used to settle finished products, whether concentrates or tailings, from currents of water. Settling tanks are of two kinds: (1) Those which collect the great quantity of coarser, heavier grains; (2) Those which take the overflow of (1), collecting the last of the fine grains that it will pay to save. In regard to the first kind, they are generally designed for ease of receiving their products and of delivering the settlings to the store bins or cars. Many good designs of these in the mills are given in Table 252. In regard to the second class, or settling tanks proper, the mill man will desire to get the greatest effect from the least cubic contents of the tank and the principles involved will be discussed with that idea in view.

To make the most of a settling tank, it must have a whole current, that is to say, one of uniform velocity from side to side, from end to end and from top to bottom. The means of getting a whole current, the relation of speed of current to size of grain to be settled, and the relations of length, width and depth, are the important factors.

TABLE 248.—UNWATERING BOXES.

Abbreviations.—Concent.=concentrates; el.=elevator; Ft.=feet; hy. cl.=hydraulic classifier; H. M.=Huntington Mill; In.=inches; mid.=middlings of; N.=none; No.=number; Ov.=Overflow of; Rect.=rectangular; Reser.=Reservoir; s. c. b. cl.=surface current box classifier; set.=settling; sp.=spigot; T.=tailings of; Un.=undersize of; Ver.=vertical; w. c. box cl.=whole current box classifier.

Mill No.	No. Used.	Design.	Length		Width.		Depth.		Slope of Sides.	Slope of Ends.	Diameter of Spigots	Feed.	Destination of	
													Spigot Products.	Overflow.
			Ft.	In.	Ft.	In.	Ft.	In.			In.			
21	1	Pointed box *a*	3	0	3	0	2	8	58°	58°	1	Mid. jigs, 4.6 mm. to 0.	By el. to H. M.....	Waste.
25	2	Pointed box *b*	12	0	8	0	10	0	58°	46°	*c* 1	Ov. No. 5 s. c. b. cl.	No. 1 w. c. box cl..	Reser. (*d*)
27	1	(*e*) (See Fig. A.)	1	11	1	0	1	1	62°	48°	½	1st sp. No. 1 hy. cl.	No. 9 jig.....	Waste.
27	1	Same as preceding.	1	11	1	0	1	1	62°	48°	½	2d sp. of same.	No. 10 jig.....	Waste.
27	1	Same as preceding.	1	11	1	0	1	1	62°	48°	½	3d sp. of same.	No. 11 jig.....	Waste.
27	1	Rect. tank (*f*) (See Fig. B.)	3	0	1	6	2	2	.....	Ver.	....	T. Nos. 6, 8, 9 & 10 jigs, 8.33 mm. to 0.	Feeder for H. M...	Waste.
41	2	V tank.....	6	0	*g* 2	6	.....		*h* 60°	Ver.	....	Un. No. 4 trommel, 3.2 mm. to 0.	No. 1 hy. classifier.	(*i*)
43	1	V tank (*j*)... (See Fig. C.)	16	0	5	0	6	0	60°	Ver.	¾, ¾, ⅛, ⅛	Ov. No. 1 hy. cl....	By el. to No. 2 hy. classifier.	No. 1 set. tank.
43	1	V tank, 2 spigots.	12	0	4	0	5	0	60°	Ver.	½	Un. No. 3 trommel, 2 mm. to 0.	No. 2 hy. classifier.	(*k*)
43	1	Rect. (*l*).....	8	0	3	0	4	0	.....	.....	6	Concent. from No. 5 el., 11.1 mm. to 0.	(1) No. 3 set. tanks. (2) No. 5 set. tanks.	(*m*)
85	1	Pointed box..	3	0	3	0	3	0	63°	63°	....	T. Nos. 1, 2 & 3 jigs, 4-mesh to 0.	Stamps (*n*).....	Waste.
87	1	Rect. (*o*).....	24	0	10	0	2	0	.....	.....	N.	T. Nos. 1, 2, 3, 4 & 5 jigs, 3-mesh to 0.	Stamps.....	(*p*)
88	1	Rect. (*q*). (See Fig. D.)	6	8	5	0	2	0	.....	.....	N.	T. Nos. 1 and 2 jigs, 3 to 10-mesh.	Stamps.....	Waste.
92	..	Cone. (See Fig. E.)	*r* 2	6	.....		4	0	73°	.....	*s* ½	T. Nos. 1 and 4 jigs, 10-mesh to 0.	Waste or to another jig.	Waste.
92	..	Cone. (See Fig. F.)	*r* 1	6	.....		1	1¾	57°	.....	*s* ½	Between two halves of jigs.	Second half of jig.	Waste.

(*a*) Pointed box with 3 inches vertical at top. (*b*) Pointed box with 4 feet 3 inches vertical at top. Fed at one end over full width. Two spigots at bottom and one in side 18 inches below top and 6 inches from overflow. (*c*) This is the lower spigot; the upper is 6 inches diameter. (*d*) Top spigot to trommel. (*e*) Feed board at one end is level and 1 inch above the overflow. (*f*) Rectangular tank with sloping bottom, and also the lower part of the sides. (*g*) This is at the top; the bottom width is 6 inches. (*h*) About. (*i*) Some later tank. (*j*) A V tank with its upper 39 inches vertical and with 4 spigots. (*k*) Pipes to No. 8 and No. 9 jigs and overflow to steam stamps. (*l*) Rectangular, with two spigots; one spigot is a 6-inch pipe with a gate. Pipe is pivoted to deliver to any one of ten settling tanks; other is a 1½-inch pipe with valve. (*m*) Water for No. 1 jig. (*n*) Settlings amount to 40% of the total solid material in the feed. (*o*) Rectangular, with overflow 18 inches above bottom. (*p*) Clear water for stamps. (*q*) Rectangular, with two cross dams. (*r*) Diameter. (*s*) In a 2-inch hole.

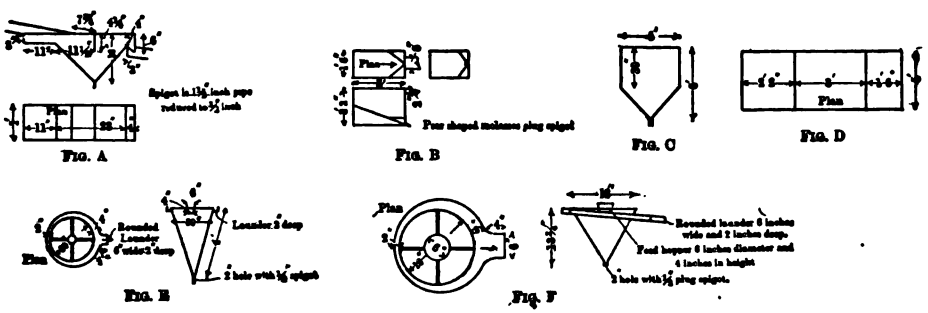

§ 342. Means of Getting a Whole Current will be first considered. The water may be made to lose its quality of a plunging stream by being fed in through a perforated grating *f* (Fig. 282), behind a partition. If it then passes through a perforated partition *e*, the stream will issue in little jets, each widening until they coalesce into one whole current. If at the other end the water finds a perforated partition *g*, and behind it the suction due to the overflow, it will be drawn from the bottom, as well as from the top, as a whole cur-

rent and discharged. The perforated partitions *e* and *g*, if made removable, would simplify the cleaning up. Pulp must have first passed through a screen to remove fibre and chips, before coming to this tank.

A simpler scheme, which theoretically is not quite so good, is to distribute the pulp evenly across the inlet end and to break up local currents by two gratings, made up of vertical bars 1 inch square, with 1-inch spaces, the bars of the second grating staggered with those of the first. A similar set should be placed at the tail end of the tank. If it is desired to discharge continuously either of these tanks, the bottom can be divided up into hoppers with sides sloping 50°, and spigots may be chosen small enough to give pulp of the desired density, provided the fibre and chips are out of the pulp.

§ 343. THE RELATION OF SPEED OF CURRENT TO SIZE OF GRAIN.—The smaller the grain of any given mineral, other things being equal, the slower will it settle, and the slower must be the current from which it is to be settled. In general any given particle of water must remain in the settling tank a length of time equal to the time needed for the smallest particle of ore to settle from the top of the tank to the bottom. This will be understood by referring to the discussion of the path of the particle, in the next paragraph.

The path of a particle settling in a horizontal whole current of water will be the diagonal of the parallelogram of which the vertical component *ab* (Fig.

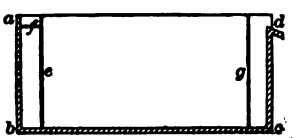

FIG. 282.

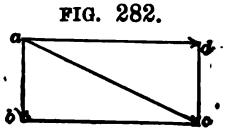

FIG. 283.

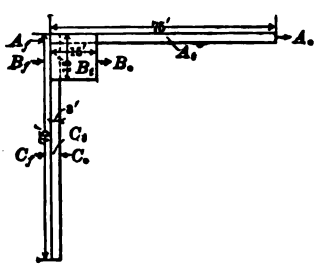

FIG. 284.

283), represents the velocity of falling in water and the horizontal the velocity of the current in the tank. This diagonal at the start will vary slightly from a straight line, because the particle has a short period of acceleration to reach its full velocity, and it will probably vary somewhat all along, owing to the inversion of the current, that is, the occurrence of upward currents in any horizontal stream of water. This inversion, however, diminishes as the current lessens its speed, and the speeds here discussed are very small.

As the different sizes and specific gravities of grains have different speeds of settling in water, it follows that their paths will have different slopes, the quick settling, steeper, and the slow settling, gentler. There will be some particles so fine that they will not settle in a week. It becomes necessary, therefore, to decide upon a minimum size of grain that the tank is to settle, and to run the current at a rate which will settle that grain.

§ 344. RELATIONS OF LENGTH AND WIDTH TO THE SETTLING.—Before discussing the relations of the length, width and depth, let it be assumed that one foot of water above the sediment in a settling tank is deep enough for settling, and that this distance is a minimum upon which the deposition of sediment is not to be allowed to encroach. That is to say, the tank must be made deep enough so that after it has settled its charge and it is time to clean it out, there is still one foot of water above the sediment.

Having the minimum depth at one foot, let us next consider the relations of

length and width to the settling of ore particles. For this purpose let us suppose we have three tanks, as shown in Fig. 284, with the following dimensions: Tank *A* is 75 feet long, 3 feet wide; tank *B* is 15 feet long, 15 feet wide; tank *C* is 3 feet long, 75 feet wide. These all have 225 square feet of area. If in all these tanks a perfect whole current exists, then *A* will be the poorest and *C* the best settling tank, because the faster the current, the more will the settling be disturbed by inversion current and the poorer will be the settling. Suppose each of these tanks is fed at the rate of 15 cubic feet per second, then tank *A* has a current whose velocity is 5 feet per second; tank *B*, 1 foot per second, tank *C*, 0.2 foot per second. In each tank it takes 15 seconds for a particle of water to traverse the tank, so that in *A* a particle has 15 seconds to settle in a current of 5 feet per second; in *B* a particle has 15 seconds to settle in a current of 1 foot per second; in *C* a particle has 15 seconds to settle in a current of 0.2 foot per second. The inversion current will be strong in *A*, weak in *B*, and almost absent from *C*.

Other things being equal, then, it is clear that *C* is a much more perfect tank than *B*, and *B* than *A*. To realize these conditions, however, a perfect whole current feed and whole current discharge (see Fig. 282), must be provided. The longer the tank, the easier it is to get these. For this reason, tank *C* is clearly impossible and for the reason previously given, tank *A* is certainly unwise. There will be between the two a tank that will, with the most perfect, practical distribution of feed and gathering up of overflow, be as short and as wide as is practicable, and this is probably tank *B*. Tank *B* may be said to largely overcome the disturbing quick current of *A* on the one hand, and on the other, the difficulty of perfect distribution of feed and gathering up of overflow of tank *C*.

§ 345. Relation of Length to Depth.—The relation of length to depth may be understood by referring to Fig. 283, from which it will be clear that there are two extreme paths a water particle may take, namely, from *a* to *d* direct, or by the longer path, *a, b, c, d*. The two perforated plates largely overcome the tendency of the water to take the shorter path. If the tank is very short and deep, the tendency may be increased and it may be necessary to plug the alternate holes of the upper part of the perforated partitions *e* and *g*.

The longer the tank with reference to the depth, the less is this tendency to hasten the surface current. This is well shown in Table 249, which gives the ratios of the shortest to the longest path for different lengths of tank, the depth being taken as unity in each case. A decrease of depth not only diminishes the difference of the paths, but it may save mill height.

TABLE 249.—RATIO OF PATHS FOR DIFFERENT LENGTHS.

Depth.	Length.	Ratio. $\frac{ab}{abcd}$	Depth.	Length.	Ratio. $\frac{ab}{abcd}$
1	2.5	0.555	1	10.0	0.833
1	5.0	0.714	1	15.0	0.882
1	7.5	0.789			

§ 346. Relation of Width to Depth.—Considering next the relation of width to depth, we find that in two tanks with the same cross section, an ore particle reaches the bottom sooner in the shallow tank. For example, if a tank 15 feet wide and 1 foot deep be compared with one 3.873 feet wide and 3.873 feet deep which has a cross section of the same area, both tanks having the same velocity of current, the latter will take just 3.873 times as long to settle particles from its top layer to the bottom, and must, therefore, be just 3.873 times as long as the shallow tank, to do the same work. This increase of

length increases the cubic contents of the deep tank to 3.873 times that of the shallow tank.

§ 347. CALCULATION OF DIMENSIONS.—From the facts already presented we see that it is possible to calculate the quantity of pulp a given size of tank will settle when the minimum size of grain to be saved is known, or on the other hand, what is more of importance to the mill man, to calculate the dimensions of a tank necessary to treat a given quantity of pulp. The various steps of the latter calculation are shown in Table 250. The first column gives a range of sizes of quartz. The second gives the velocities of settling of the slowest grains taken from the curve (Fig. 287). The tank is assumed to be 1 foot (304.8 mm.) deep in all cases. The third column gives the time that the particles must be in the tank to settle the distance of 1 foot, by dividing 304.8

TABLE 250.—DIMENSIONS OF TANKS 1 FOOT DEEP, FOR SETTLING VARIOUS SIZES OF QUARTZ FROM 1 CUBIC FOOT OF PULP PER MINUTE.

Diameter of Quartz Particles.	Velocity of Settling per Second.	Time to Settle One Foot (304.8 mm.).	For a Tank Fifteen Feet Long (4,572 mm.).		For a Square Tank.	
			Width for each Cubic Foot Fed per Second.	Velocity of Current per Second.	Length and Width for Each Cubic Foot Fed per Second.	Velocity of Current per Second.
Mm.	Mm.	Seconds.	Mm.	Mm.	Mm.	Mm.
1.5	117	2.605	52.94	1,755	491.9	189
1.2	100	3.048	61.94	1,500	532.2	175
1.0	85	3.586	72.87	1,275	577.2	161
0.9	77	3.958	80.48	1,155	606.2	153
0.8	68	4.482	91.07	1,020	645.3	144
0.7	60	5.080	103.2	900	687.0	135
0.6	51	5.976	121.4	765	744.9	125
0.5	42	7.257	147.5	630	821.1	113
0.4	33	9.236	187.7	495	926.3	100
0.3	22	13.85	281.5	330	1,134	81.9
0.2	12	25.40	516.1	180	1,536	60.5
0.1	4	76.20	1,548.4	60	2,661	34.9
0.075	(a) 3	101.60	2,065	45	3,072	30.2
0.050	(a) 2	152.40	3,097	30	3,764	24.7
0.025	(a) 1	304.80	6,194	15	5,323	17.5

(a) These were estimated.

successively by the rates in the second column. The fourth column gives the width necessary for each cubic foot fed per second in a tank 15 feet (4,572 mm.) long. It is obtained by multiplying 1 cubic foot (28,316,847 cu. mm.), by the time and dividing the result by the product of the length by the depth. The fifth column gives the velocity of current in a tank 15 feet long, by dividing the length by the time. The sixth column gives the length and width of a square tank receiving 1 cubic foot of pulp per second, and is obtained by multiplying 1 cubic foot by the time, dividing by the depth and taking the square root of the result. The velocities of the currents in these tanks are shown in the seventh column and are obtained by dividing the length by the time. It should be noted that for a tank 15 feet long, the width in the fourth column will increase directly as the number of cubic feet of feed, while for a square tank the dimensions in the sixth column increase directly as the square root of the number of cubic feet of feed.

As it may be important to decide the length and width of a tank for settling fine material of other sizes than those given in Table 250, the following formula is given:

Let v be the velocity in mm. per second that the grain settles; let D be the depth of tank in mm.; then $\frac{D}{v}$=seconds for the grain to settle to the bottom; let L be the length of tank in mm.; then $\frac{L}{\frac{D}{v}}=\frac{Lv}{D}$=velocity of current in tank

in mm. per second; let W be the width of tank in mm.; let V be the volume of feed water in liters per second; then $WD\frac{Lv}{D}=WLv$=volume in cubic mm. of feed to tank per second; and $\frac{WLv}{1,000,000}=V$=volume of feed water in liters per second. If we are given all but one of these values, the remaining one may be obtained. Ordinarily the mill man knows V and v, or if he does not know v, he will know the diameter of the particle to be settled, from which he can get v by reference to Fig. 287. All he will then need to know is W and L. On the square tank basis, which the author favors, $W=L$ and the formula then gives the value of these two. If a rectangular tank 15 feet long be desirable, then the formula will give W by inserting in it the value L=4,572 mm. (15 feet). Thus, if we assume that 0.0125 mm. diameter quartz is as fine quartz as it will pay to settle, and that this particle settles one foot in 610 seconds, then we must provide a tank which takes 610 seconds for the current to traverse. Such a tank for 1 cubic foot per second, if 4,572 mm. (15 feet) long, will be 12,395 mm. (41 feet) wide, and being twice as wide as it is long, it should be divided into two nearly square tanks.

The author is of the opinion that square tanks, with 1 foot minimum depth of surface water, are best in all cases, but when the tank would figure out larger than 15 feet on a side, it is better to use two or more square tanks. For practical use, Table 251 has been computed from the formula to show the cubic feet of pulp that can be fed per second to a tank 15 feet square for various sizes of quartz grains.

TABLE 251.—CAPACITIES OF A TANK 15 FEET SQUARE.

Size of Grain to be Settled.	Amount that Can be Fed per Second.	Size of Grain to be Settled.	Amount that Can be Fed per Second.
Mm.	Cubic Feet..	Mm.	Cubic Feet.
1.5	86.36	0.4	24.36
1.2	73.82	0.3	16.24
1.0	62.74	0.2	8.86
0.9	56.84	0.1	2.953
0.8	50.20	0.075	2.214
0.7	44.29	0.050	1.476
0.6	37.65	0.025	0.738
0.5	31.00	.....	.....

§ 348. Practical Limits of Settling.—If tests on the overflow of the tank show the grains going off to be rich in precious metals (arsenides or chloride of silver, telluride of gold, etc.), the cure will be to diminish the current by increasing the number of tanks in parallel. This principle is particularly worthy of consideration in the case of tailings of amalgamation.

If 1 foot depth of water is the minimum allowed, then the tank may be made sufficiently deep to catch the settlings, and when it fills with sediment within 1 foot of the top of the water, it is time to clean it out and start again. This increased depth during the earlier settling might seem to require a longer tank, but this is not so, for it corrects itself. The extra depth of 2, 3 or more feet will reduce the speed of the current to $\frac{1}{2}$, $\frac{1}{3}$, or less, and therefore give the desired time, two, three or more times as long, for settling the minimum particle. This fact that the capacity of a tank for settling is independent of the depth has been also shown in § 347, where the depth cancels out in the derivation of the formula and does not appear in the final result.

A tank of this description will fill up at the feed end with the heaviest grains; the bank will slope downward toward the tail end, where the finest settlings will be found. If then, 15 feet is long enough for a unit tank to fill up at the feed

TABLE 252.—SETTLING TANKS.

Abbreviations.—Am.=amalgamating; C.=concentrates of; can. t.=canvas tables; Con.=continuously; Con. sp.=spigots run continuously; cr. par.=cross partitions; dr.=drainings of; Ft.=feet; H. l. d.=heads of lower deck of; In.=inches; Int.=intermittently; Int. g.=gate opened intermittently; Int. sp.=spigots run intermittently; j.=jigs; No.=number; Ov.=Overflow of; p=ponds; Rect.=rectangular; Rit. t.=Rittinger tables; set.=settling; set. t.=settling tank; Sh.=shoveled; ship.=shipping; Sl.=slime; T.=tailings of; t.=tables; tr. t.=trunking table; unw.=unwaterer; van.=vanners; w. c. b. cl.=whole current box classifier.

Mill No.	No. Used.	Design.	Length		Width.		Depth.		Feed.	Destination of		How Discharged.
										Settlings.	Overflow.	
			Ft.	In.	Ft.	In.	Ft.	In.				
19	1	Rectangular.....	10	0	6	0	3	6	Ov. No. 1 w. c. b. cl....	Smelter.....	Waste.....	Sh. out.
22	1	Rectangular.....	5	0	4	0	1	6	Heads of sl. table.....	Ship. car	No. 2 set. t.	Sh. out.
22	1	(See Fig. A).....	12	0	{0 1	8 0	{1	6	Ov. No 1 set. tank.....	Ship. car	No. 3 set. t.	Sh. out.
22	1	Rectangular.....	20	0	5	0	1	8	Ov. No. 2 set. t.& tr. t...	No. 2 rolls.....	Waste.....	Sh. out.
24	1	Rectangular (*a*)....	20	0	15	0	17	0	(*aa*)	Vanner.....	Waste.....	(*aaa*)
25	1	Rectangular (*b*)....	101	0	4	0	2	0	C. jigs and Rit. t.....	(*bb*)	Reservoir..	(*bbb*)
25	1	Rectangular (*c*)....	135	0	6	6	6	*cc* 6	T.j. & Rit. t., 6 mm. to 0	(*ccc*)	Reservoir..	Int. sp.
26	*d*	Rectangular.....	6	0	6	0	6	0	(*dd*)	Dump.....	No. 2 set. t.	Int. g.
26	1	Rect. with 5 cr. par.	30	0	10	0	5	6	Ov. Nos. 1 & 4 set. t...	Dump.....	(*ddd*)	Int. g.
26	1	Rect. with 1 cr. par.	10	0	5	0	6	0	Ov. No. 2 unw.....	Dump.....	No. 4 set. t.	(*e*)
26	1	Rect. with 5 cr. par.	30	0	10	0	5	6	Ov. No. 3 set. tank.....	Dump.....	No. 2 set. t.	(*e*)
27	1	3 tanks in series, all rect. Last has 2 cross dams and 1 inverted dam.	14 100 12	0 0 0	3 1 6	0 0 0	1 8 15	0 0 0	Heads of slime tables..	Concentrates...	Waste.....	Sh. out.
27	1	Rectangular.....	5	0	2	10	0	10	Ov. van. heads tank...	Concentrates...	Waste.....	Sh. out.
27	1	Rectangular.....	16	0	8	0	1	6	(*ee*)	Concentrates...	Waste.....	Sh. out.
28	3	Rectangular.....	20	0	8	0	4	6	(*eee*)	Concentrates..	Waste.....	Sh. out.
28	1	(See Fig. B.) (*f*)...	6	0	6	0	4	0	Heads of sl. table.....	(*ff*)	Waste.....	(*fff*)
30	*g*	Rectangular.....	48	0	12	0	3	0	Ov. No. 3 w. c. b. cl....	Stored.....	Waste.....	Sh. out.
30	6	Rectangular.....	12	0	10	0	5	0	(*gg*)	Shipped.....	No. 4 set. t.	Sh. out.
30	6	Rectangular.....	10	0	6	0	4	0	(*ggg*)	Shipped.....	No. 4 set. t.	Sh. out.
30	1	Rectangular.....	25	0	15	0	3	0	Ov. Nos. 2 and 3 set. t..	Shipped.	Waste.....	Sh. out.
31	*h*	Rectangular.....	25	0	10	0	8	0	C.j. t.& van., 18 mm. to 0	Market	No. 2 set. t.	Sh. out.
31	1	Rectangular.....	30	0	7	0	8	0	Ov. No. 1 set. tank.. ..	Market	Waste.....	(*hh*)
34	10	Rectangular.....	.....		.....		.....		C.j.t.& van., 15 mm. to 0	Market	No. 2 set. t.	Sh. out.
34	1	Rectangular.....	32	0	16	0	4	0	Ov. No. 1 set. tank.....	Market	Waste.....	Sh. out.
35	2	Rectangular.....	30	0	24	0	5	0	C. jigs, 16 mm. to 0....	Market	No. 4 set. t.	Sh. out.
35	2	Rectangular.....	6	0	6	6	3	0	Concentrates of van....	Market	No. 4 set. t.	Sh. out.
35	1	Rectangular.....	6	0	6	6	3	0	Concentrates of tables.	Market	No. 4 set. t.	Sh. out.
35	1	Rectangular.....	40	0	10	0	2	0	Ov. Nos. 1, 2 & 3 set. t.	Market	No. 5 set. t.	Sh. out.
35	1	Rectangular.....	40	0	10	0	2	0	Ov. No. 4 settling tank.	Market	Waste.....	Sh. out.
38	(*i*)	Rectangular (*ii*)...	10	0	6	0	6	0	C.jigs, tables and van., 7.9 mm. to 0.	Storage bin....	(*iii*)	Int. g.
38	*j*	Rectangular.....	10	0	4	6	3	0	Ov. and dr. No. 1 set. t.	Storage bin....	No. 3 set. t.	Sh. out.
40	14	Rectangular.....	10	0	9	0	12	0	Conc'trates 7 mm. to 0.	Smelter.....	No. 2 set. t.	Int. g.
40	*k*	Rectangular.....	10	0	4	0	4	0	Ov. No. 1 set. tank.....	(*kk*)	(*kkk*)	Con. sp..
41	3	Rectangular.....	20	0	20	0	6	0	(*kkkk*)	Smelter	Waste.....	Sh. out.
42	8	Rectangular (*l*) ...	150	0	12	0	6	0	All c., 12.7 mm. to 0....	Smelter	No. 2 set. t.	Int. g.
42	5	Rectangular (*ll*)...	80	0	40	0	6	0	Ov. No. 1 set. tank....	Smelter	No. 3 set. t.	Sh. out.
42	3	Outside p. with cement bottoms.	150	(*m*)	100	(*m*)	.....		Ov. No. 2 set. tank.....	Smelter	Waste.....	Sh. out.
43	*n*	Rectangular (*nn*)..	20	0	20	0	6	0	(*nnn*)	Smelter	Waste.....	Sh. out.
43	..	Rectangular.....	28	0	4	0	3	0	H. l. d. of slime tables.	Smelter	Waste.....	Sh. out.
43	*o*	Pointed box.....	8	0	8	0	10	0	(*oo*)	Smelter	No. 5 set. t.	Int. g.
43	1	Pointed box.....	4	0	3	0	4	0	C. jigs and tables.....	(*ooo*)	No. 5 set. t.	Con.
43	2	(See Fig. C.) (*oooo*)	32	0	3	3	2	3	(*p*)	Smelter	No. 6 set. t.	(*pp*)
43	1	Same as preceding	32	0	3	3	2	3	Ov. No. 5 set. tank.....	Smelter	No. 7 set. t.	(*pp*)
43	1	Rect. with 1 cr. par.	17	6	7	10	3	2	Ov. No. 6 set. tank.....	Smelter	Waste.....	(*ppp*)
46	1	(See Fig. D.) (*qq*)...	13	0	4	4	1	8	Heads of slime tables..	Kieve.....	No. 2 set. t.	Sh. out.
46	1	Rectangular.....	180	0	1	1½	1	2½	Ov. No. 1 set. tank.....	No. 1 unw.....	Waste.....	(*qqq*)
47	6	(See Fig. E.) (*qqqq*).	14	3	4	0	1	3	Heads of slime tables..	(*r*)	Waste.....	(*rr*)
48	*q*	Like No. 1 set. tank in Mill 46.	13	0	4	4	1	8	Heads of slime tables..	Kieve.....	No. 2 set. t.	Int.
48	1	Rectangular.....	180	0	1	1½	1	2½	Ov. No. 1 set. tank.....	(*rrr*)	Waste.....	Daily.
58	48	Rectangular.....	4	0	1	0	0	10	Ov. van. heads tank...	Concentrates..	No. 2 set. t.	Sh. out.
58	1	Rect. with 2 cr. par	5	0	4	0	4	0	Ov. No. 1 set. tank.....	Concentrates..	Waste.....	Sh. out.
72	*s*	Rectangular.....	4	0	2	6	2	0	(*ss*	Rocking table.	?	Sh. out.
73	*t*	.....	.....		.....		.....		.....	.....	.....	.....
79	1	Rectangular (*tt*)....	19	0	11	0	1	8	(*ttt*)	(*u*)	?	Sh. out.
80	1	Rectangular.....	80	0	1	0	0	10	C. can. t., 0.76 mm. to 0	Cyanide plant..	No. 2 set. t.	Sh. out.
80	1	Rectangular (*uu*)..	35	0	3	0	3	0	Ov. No. 1 set. tank.....	Cyanide plant..	Waste.....	Sh. out.
82	11	Rectangular (*v*)....	6	0	5	5	3	8	T. van., 0.51 mm. to 0..	Am. pans	No. 2 set. t.	Sh. out.
82	28	Rectangular (*v*)....	6	0	5	5	3	2	Ov. No. 1 set. tank.....	Am. pans.....	No. 3 set. t.	Sh. out.
82	1	Rectangular (*v*) (*vv*)	40	0	8	0	6	0	Ov. No. 2 set. tank.....	Am. pans.....	Set. pond..	(*vvv*)
83	*w*	Rectangular.....	9	0	4	6	3	0	T. van., 0.43 mm. to 0..	Am. pans.....	(*ww*)	(*www*)
84	*x*	Rectangular (*xx*) ..	12	0	9	0	3	(*y*)	T. van., 0.41 mm. to 0..	Am. pans.....	(*yy*)	(*z*)

(*a*) **Rectangular with a 16x4-inch spout falling in from above.** (*aa*) **Drainage of tailings cars; overflow of elevator well; sometimes overflow of No. 4 whole current box classifier.** (*aaa*) **Stirred up and pumped out on alternate days.** (*b*) **Rectangular with cross partitions every 10 feet and a spigot in the last compartment.** (*bb*) **Smelter, except the last compartment which goes to No. 1 whole current box classifier.** (*bbb*) **Nine com-**

partments are shoveled and one compartment has a continuous spigot. (*c*) Rectangular with bottom sloping to the front and plug spigots in front 6 inches apart. (*cc*) In front. (*ccc*) Waste—used for ballast and embankments on the railroad. (*d*) Two; used alternately. (*dd*) Overflow of No. 1 unwaterer and tailings of Nos. 1, 2 and 3 jigs; 0.57 mm. to 0. (*ddd*) Pumped to water tank. (*e*) Flushed out every 24 hours. (*ee*) Overflow of concentrates boxes of jigs No. 3–11. (*eee*) Drainings of jig boxes for concentrates of No. 3–8 jigs. (*f*) Rectangular with four compartments connected by holes 18 inches wide and 2 inches high. (*ff*) Concentrates to drier. (*fff*) Cleaned out once a week. (*g*) Two; one used at a time. (*gg*) First-class concentrates of jigs, vanners and tables, 25 mm. to 0. (*ggg*) Second-class concentrates of jigs, vanners and tables, 25 mm. to 0. (*h*) Three; one is filling, one is draining and one is being emptied. Each is emptied every four days. (*hh*) Shoveled out monthly when mill shuts down. (*i*) There are four in series in each section of the mill. (*ii*) Rectangular with four hoppers and each hopper has two screens at the bottom—20 mesh and 6x6 inches size; bottom of hopper is 1x2½ inches; gate at bottom worked by bar nut and socket wrench. (*iii*) Overflow and drainings to No. 2 settling tanks. (*j*) There are eight in each section of the mill in two series of 4 each. (*k*) Three; in series. (*kk*) No. 1 settling tank by elevator. (*kkk*) Clean water for the mill. (*kkkk*) Overflow of No. 2 whole current box classifier and of No. 2 settling tank. (*l*) Rectangular with hoppers at the bottom and with partitions; made of wood. (*ll*) Rectangular cement tanks on the ground; no partitions; tracks laid in them for cars to run on and haul away the settlings. (*m*) About. (*n*) Three; one used at a time. (*nn*) Rectangular; it is fed by a V launder with 12 holes ⅛-inch diameter in the bottom and has an overflow at each end going to waste. (*nnn*) Overflow of No. 1 unwaterer and No. 2 whole current box classifier. (*o*) Ten; there are two rows of five tanks each. (*oo*) Spigot of No. 3 unwaterer, 11.1 mm. to 0. (*ooo*) Elevated to No. 3 unwaterer. (*oooo*) Rectangular with cross partitions. Each partition has a 6x6-inch hole at the bottom with a gate to remove all the water when cleaned; also, a 6x6-inch gate in the end to drain off the water; spigot is a 6-inch pipe with gate. (*p*) Spigot of No. 3 unwaterer and overflow of No. 3 and No. 4 settling tanks, 11.1 mm. to 0. (*pp*) Shoveled out. Gate to drain off the water. (*ppp*) Shoveled out every two months, when full. (*q*) These are 5 double tanks, one-half of each being run at a time. (*qq*) Rectangular, with head and tail compartments and longitudinal partition. The cross partitions have plugs in them. This is a double tank, one-half being run at a time. (*qqq*) Shoveled out every 24 hours. (*qqqq*) Double rectangular tanks with head and tail compartments 13 inches deep, made of 2-inch planks. Only one-half of each tank is run at a time. (*r*) Kieve and tye. (*rr*) Intermittent; one-half runs while the other half is being cleaned. (*rrr*) No. 1 distributing tank. (*s*) One; used only at the time of clean up. (*ss*) From a set of auxiliary amalgamated plates. (*t*) These tanks, used at the time of clean up, are described in § 228 under clean up barrels. (*tt*) Rectangular, with five partitions 2 inches thick, causing streams to meander backward and forward. (*ttt*) First compartment gets concentrates from riffles, the second gets the overflow of the first and heads of canvas tables. The rest only settle. 0.56 mm. to 0. (*u*) First compartment to chlorination works; rest to vanners. (*uu*) Rectangular, with a central partition forcing the current to go and come. (*v*) These tanks, together with the other tanks in this mill, are in two sets of forty in series in each set. They are so arranged that one may be cut out while being cleaned. (*vv*) Rectangular, with a direct dam every 10 feet and an inverted dam between. (*vvv*) Flushed out by gate. (*w*) There are 60 tanks arranged in two banks—33 in one and 26 in the other. Banks are placed end to end. Each bank has three rows of tanks. Current goes forward in first row, returns in second and goes forward again in the third. The feed launder runs over the central row and can be tapped into any tank in that row. The earlier tanks can be switched out of circuit while pulp is shoveled out. The later tanks are flushed out. (*ww*) Pumped to stamps and vanners. (*www*) Part are shoveled and part are flushed out. (*x*) These tanks are arranged in a bank 125 feet long, 28 feet wide—three rows each 9 feet wide. The current runs the length of the first row, back the second and forward again in the third. Stream is deflected from the tank while being dumped. (*xx*) Rectangular with hopper bottoms below. (*y*) Plus the hopper. (*yy*) Pumped to stamps. (*z*) Pumped through a 2-foot hole.

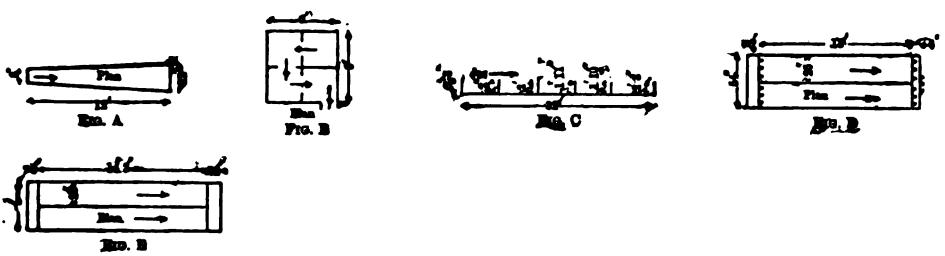

end with sediment, to within 1 foot of the surface, and a tank should be made 60 feet long, such a tank would have periods of action of different kinds. For example, during the first period, 1 to 15 feet are filling with sediment and 15 to 60 feet are practically idle; during the second period, 1 to 15 feet are distributing pulp, 15 to 30 are filling and 30 to 60 are idle; during the third period, 1 to 30 are distributing, 30 to 45 are filling and 45 to 60 are idle; during the fourth period, 1 to 45 are distributing and 45 to 60 are filling. After this the whole tank must be cleaned out. It will be observed that ¾ of this tank is idle all the time; during the early part it is the tail end and during the later part, the feed end.

It will be noticed that in all the foregoing theory and calculations, the velocity of quartz is taken for the computations. This was done for simplicity. All the metal-holding minerals, unless in flat scales, will settle more rapidly than quartz of the same size. The theory as worked out, is based upon the best facts the author has at his command and apply only in cases where no precipitant is used in the water. It may be that particles much finer than those considered

will have to be settled; these must be experimented upon and then the same laws may be applied for computing the tanks to do the work.

A good rule in regard to the limit of settling is to increase settling capacity as long as the added catch pays the expense of getting it. The author on one occasion settled slimes from a steam stamp, crushing Lake Superior copper rock, which failed to reach the bottom of an oil barrel in 24 hours, but settled in a week. The slime so caught was as fine as clay and assayed 0.2% copper. No possible use could have been made of it unless it had been rich enough to smelt or leach at once, which it was not.

The slowest grains given in Fig. 287, were the grains when 90%, as estimated by the eye, had passed. The few straggling residual grains take an indefinitely longer time to come down.

§ 349. Data from the Mills.—A study of Table 252 shows that most of the tanks in use are rectangular in shape, and they are generally narrower in proportion to their length than the discussion suggests would give the best settling. A few have bottom cross partitions extending up part way. These serve to prevent a sweeping bottom current, but do so at the expense of a quickened top current, losing settling power thereby. A few have partitions causing a meandering current backward and forward, or up and down. These partitions simply hurry the current and hinder it from doing its best settling. The best settling is done by diminishing speed, not by lengthening the course. Two tanks in parallel do much better work than two in series. Many of the tanks lose efficiency due to rapid local currents caused by feeding and overflowing over only part of the width. The baffle plate or deflector, for breaking up a surface current, does not occur in any of the settling tanks. The concentrates bank will have coarsest, heaviest, deepest and richest deposit at the feed end of the tank, sloping off and becoming poorer and finer toward the overflow end.

Unless otherwise stated in the design, the tanks are shoveled out periodically and it will be seen that most of them are so cleaned. Some tanks have gates with or without hopper bottoms to drop or flush out the product. In a few instances a continuous spigot is used. Mill 38 has a 20-mesh screen in the bottom for draining off the water preparatory to dumping the concentrates. A few grains may pass through this, but a natural filter almost immediately forms and prevents more concentrates from coming. The drainage water issues continuously and goes to a later settling tank.

The settling tanks of the combination mills 82, 83 and 84 are arranged in series with short, narrow, connecting launders, so arranged that any one may be cut out and shoveled or flushed out through the bottom. They are in a measure distributors, since the settlings are to be charged to the amalgamating pans, with the shortest distance to shovel.

Mill 42 deserves a special note on account of the magnitude of the operation. Here all the coarser concentrates are caught in hopper tanks which discharge directly by gates below into cars, while the fine overflows run to very large, shallow tanks, 40 feet wide and 80 feet long, which, when full, are discharged by opening a side and running a car in on tracks on the bottom of the tank for ease of shoveling. A small amount of quicklime is shoveled in, chiefly to dry the mud, and incidentally to precipitate the copper from sulphate, and flux the ore. This mill is noteworthy because the final overflows of all its box classifiers are concentrates and are sent to be settled in the above tanks. The order of depositing and of idleness probably exists in this tank, as indicated in § 348, although the tank is not computed on the fifteen-foot basis, but it is considered better economy to let a portion of the tank be idle in order to gain the advantages of the long, inexpensive period of catching, followed by the large scale clean up.

The use of burnt lime is also practiced in the cyanide plants of South Africa, but it is added, not to the settled mud as in Mill 42, but to the water carrying fine slimes in suspension, and it throws them down in such a flocculent, porous condition as to permit of easy leaching. The Bonanza Company[81] uses about 5½ pounds of lime for every ton of solid slime contained in the pulp, and has thereby reduced the time required for settling from 12 hours to 2½ hours, and its pumping charges from £185 to £25 per month. In kaolin washing alum is frequently used to settle the very fine stuff from the water.

Albert Williams, Jr.,[30] advocates hopper bottomed tanks for settling stamp pulp for pan amalgamation and the setting the pans low enough to sluice the pulp direct to the pan; 24% of the labor in a silver mill is for tank men, usually shoveling 30 inches deep. The added cost of construction need not be over $1,000 for a 20 stamp mill, a sum which could be saved on wages in three months' run.

§ 350. Baffle Board Settling Tank.—This form of apparatus is reported by Courtenay De Kalb (private communication) as being in use at Cocheño, Mexico, for settling fine slimes. As shown in Figs. 285*a* and 285*b*, it consists of a rectangular tank with hoppers *PP* in the bottom and with 60° baffle

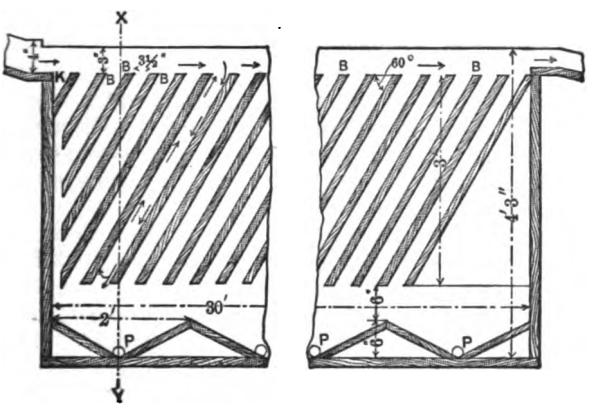

FIG. 285*a*.—LONGITUDINAL SECTION OF BAFFLE BOARD SETTLING TANK.

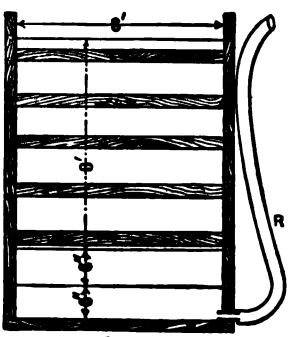

FIG. 285*b*.—SECTION ON XY.

boards *BB* set 3½ inches apart horizontally. The height of the overflow is adjustable and is such that there is just room enough for the current to flow over the tops of the baffle boards without rippling. The box *K* serves as a dead box. The principle of the apparatus is that between any two adjacent baffle boards currents are set up as indicated by the arrows. The downward current causes the slimes to slide down on the upper side of the baffle boards, but the upward current is not sufficient to lift them again. The settled slimes are discharged intermittently through ¾-inch rubber goose necks, *R*, adjusted to give slow flow and hung up above the level of the water, as shown, when not discharging. There are three of these in use at Cocheño. The feed contains on an average 4.67% solid material, the overflow averages 0.64% solid and the settlings 21.91% solid material. The settlings are drawn off at intervals of every four hours, the time of drawing lasting about an hour, and the feed not being interrupted. The surface velocity of the current in the tank is 7½ feet per second. Formerly instead of these three tanks, settling boxes and five settling ponds, each about an acre in extent, were used. The circulation was always through two of these ponds and sometimes through three. Treating the

same material as above (4.67% solid) these ponds gave an overflow which averaged 0.7% solid material, and the settlings pumped out carried 20% solid.

The design given in Figs. 285*a* and 285*b* is not adapted to slimes carrying more than 60% granular matter, of which the maximum grains must not be more than 0.08 mm. diameter. The effectiveness of the apparatus appears to be due to the fact that grains have only to settle ¼ inch in a length of 30 feet before they are caught in the slow moving water between the baffle boards.

THE GEYER SLIME CONCENTRATOR consists of intermittent settling tanks. It uses four tanks, each with a 3 m. diameter and 1 m. high cylinder, with 60° cone bottom, with no overflow, but with a constantly flowing small spigot at the apex. The pulp stream fills the first tank and is then shifted automatically to the second, and so on, till the last is reached, no overflow having been made. When it is almost time to return to the first, a gate in the first tank, which is placed at the junction of the cylinder and the cone, is opened automatically and the clear water above this level flows out. This gate is closed automatically when it is time for the pulp to be fed to the first tank again. With 1,000 liters pulp fed per minute, each tank has twenty minutes in which to settle before the top clarified water is drawn off.

IX. CLARIFYING RESERVOIRS.

§ 351. These are reservoirs for settling out the sediment from water which has once been used, preparatory to using it again. The principles discussed under settling tanks apply here, except that the particles to be settled are in this case much smaller than in the former, and the sediment is generally of no value.

In Mill 25 all the water which has done its work of concentration flows by (*a*) a canal 600 feet long, 6 feet wide and 6 feet deep, to (*b*) a tank 30 feet long, 15 feet wide and 6 feet deep, thence to (*c*) a tank 45 feet long, 30 feet wide and 6 feet deep, which is divided up by cross partitions into nine compartments, thence to (*d*) a tank 200 feet long, 30 feet wide and 6 feet deep. The canal and tanks are all built of stone and lined with cement and have a smooth cement floor. (*a*) is flushed out for removing sediment twice a week. (*b*) and (*c*) are flushed out once in two months. (*d*) is hydraulicked out with a hose once in nine months. The sediment contains about 6% of lead and is not worth saving.

Mill 26 sends all the drainage water from the mill, including the flushing from the settling tanks for tailings, to a reservoir with 40,000 square feet of surface area at the foot of the hill, about 600 feet away, the sides of which are built of coarse tailings, made water-tight by the finest slimes. The silt is there settled and the clear water drawn off into a tank 36 feet wide, 20 feet long and 7 feet deep, and from there is pumped by a Miller Duplex pump, at the rate of 100 to 125 gallons per minute, to No. 1 receiving tank, which it reaches almost clear of sediment. So perfect is the water system in this mill, that no portion of the water goes off except that due to evaporation. In order to maintain the banks of the reservoir above the slime deposit, the tailings of the vanners and fine jigs are settled in unwatering boxes which yield overflow to settling tanks and spigot products which are conducted down the hill in launders and are distributed along the bank all around the reservoir, by a V launder. This launder has small, triangular openings with area of 1 square inch placed 4 feet apart along the bottom of the launder which enables the reservoir man to direct the sand deposits to any desired point along the bank of the reservoir.

Mills 83 and 84 also have settling ponds for recovering the last of the water.

At Tarnowitz a space enclosed by a dike of coarse tailings, made tight on the inside by fine tailings, has been used for impounding mill tailings.

At the washing plant of the Longdale Iron Co., Virginia, ponds several acres in extent and 20 or 30 feet deep are formed by making embankments of slag from the blast furnaces and lining the inside slope with clay. The slimy water from which the sand has previously been removed by an unwatering apparatus, called the Johnson mechanical sand shoveler (see § 637), runs into these ponds and filters through the embankment perfectly clear. In this particular instance the water is not used again, the clarifying being done merely to prevent deposition in the streams.

§ 352. QUALITY OF WORK OF CLASSIFIERS.—To test the efficiency of classifiers in the mills, the author obtained complete sets of samples from Mills 22, 28, 30 and 38. These samples were all sized upon a nest of sieves, and the results are given in the columns headed "Per cent." in Tables 253 to 256. The other columns will be explained later under Testing, in Chapter XXI. The results are also plotted graphically in Figs. 536, 538, 540 and 542.

Sorted products of a classifier might be tested either in a perfect sorting instrument which would determine how nearly the classifier had approached to perfect sorting, or by sizing sieves and microscope which would show the actual sizes obtained and the approximate proportions of minerals present. On the samples here considered sieves were used down to the limit of sifting, and sorting in a beaker for finer sizes.

An inspection of the sizing tests and of the diagrams shows how each classifier product stretches out over a considerable range of sizes, that is, the classifiers in the mills are all doing more or less imperfect work. Looking over the graphical plots of Figs. 535 to 542, one sees a series of products less and less perfectly bounded from the coarsest sieve down to the last spigot of the box classifier. The limits of the trommel sizes are fairly sharply defined, those of the first spigot product of the hydraulic classifier are less so and the decrease goes on through the later spigots of the hydraulic classifiers and the spigots of the box classifiers.

Regarding the respective merits of the hydraulic classifiers the work of the Meinecke classifier of Mill 28 excels all the others in keeping fine material out of the spigot. It is logical that it should do the best work when one considers that its action (see § 325) is to successively eliminate the lighter grains.

Tables 253 to 256 also show that the amount larger than 0.270 mm. in the overflow of the hydraulic classifiers is 3.5% in Mill 22, less than 1.0% in Mill 28, about 5 or 10% in Mill 30 and 0.5% in Mill 38. This indicates that the lower limit of work of hydraulic classifiers is about $\frac{1}{4}$ mm. ($\frac{1}{100}$ inch) and the practice is to send stuff finer than this to box classifiers.

TABLE 253.—SIZING TESTS OF SORTED PRODUCTS IN MILL 22.*

	No. 1 Hydraulic Classifier.								No. 1 Surface Current Box Classifier.					
	Feed.		1st Spigot.		2d Spigot.		Overflow.		1st Spigot.		2d Spigot.		Overflow.	
Number in Fig. 536.	4 (Fig. 535)		5		6		7		8		9		10	
	Percent.	Cumulative Percent.	Percent.	Cumulative Percent.	Percent.	Cumulative Percent.	Percent.	Cumulative Percent.	Percent.	Cumulative Percent.	Percent.	Cumulative Percent.	Percent.	Cumulative Percent.
Through 5.61 on 3.94 mm (a)	0.2	0.2	....	....	....	....	....	....	....	....	....	....	....	....
Through 3.94 on 2.69 mm	20.8	21.0	2.4	2.4	1.0	1.0	....	....	....	....	....	....	....	....
Through 2.69 on 1.89 mm	26.8	47.8	7.2	9.6	2.9	3.9	....	....	....	....	....	....	....	....
Through 1.89 on 1.49 mm	13.5	61.3	6.1	15.7	2.5	6.4	....	....	....	....	....	....	....	....
Through 1.49 on 0.945 mm	14.6	75.9	13.1	28.8	7.1	13.5	....	....	0.3	0.3	....	....	....	....
Through 0.945 on 0.667 mm	7.8	83.7	14.2	43.0	8.2	21.7	0.3	0.3	0.5	0.8	....	....	....	....
Through 0.667 on 0.498 mm (a)	5.1	88.8	17.0	60.0	10.3	32.0	0.6	0.9	1.5	2.3	....	....	....	....
Through 0.498 on 0.371 mm	1.4	90.2	2.9	62.9	1.8	33.8	0.6	1.5	1.0	3.3	....	....	....	....
Through 0.371 on 0.270 mm	2.7	92.9	12.4	75.3	10.3	44.1	2.0	3.5	4.8	8.1	....	....	....	....
Through 0.270 on 0.158 mm	3.2	96.1	15.8	91.1	17.9	62.0	9.7	13.2	22.0	30.1	0.4	0.4	....	....
Through 0.158 on 0.119 mm	0.9	97.0	3.3	94.4	8.2	70.2	5.7	18.9	13.2	43.3	1.3	1.7	0.4	0.4
Through 0.119 on 0.073 mm	1.2	98.2	3.3	97.7	14.7	84.9	13.8	32.7	29.5	65.8	10.9	12.6	1.6	2.0
Through 0.073 on 0.069 mm (a)	0.2	98.4	0.5	98.2	2.4	87.3	1.6	34.3	4.2	70.0	2.7	15.3	0.4	2.4
Through 0.069 on 0.047 mm							6.3	40.6	13.0	83.0	13.6	28.9	6.7	9.1
Through 0.047 on 0.034 mm							15.1	55.7	7.7	90.7	23.2	52.1	14.4	23.5
Through 0.034 on 0.025 mm	1.3	....	1.2	....	11.7	....	12.2	67.9	3.5	94.2	25.9	78.0	18.9	42.4
Through 0.025 on 0.019 mm							7.7	75.6	1.3	95.5	6.7	84.7	12.8	55.2
Through 0.019 on 0.012 mm							5.4	81.0	0.6	96.1	3.3	88.0	7.4	62.6
Through 0.012 mm							18.6	....	2.6	....	11.6	....	37.1	....
Total	99.7	....	99.4	....	99.0	....	99.6	....	98.7	....	99.6	....	99.7	....

* The significance of the columns headed "Cumulative percent." is explained in § 868–§ 866.

(a) Round hole sieves were used down to and including 0.498 mm.; then square holes down to and including 0.069 mm. Below 0.069 mm. settling in water was used and the sizes given are merely diameters of quartz which correspond to settling velocities of 7.33, 3.67, 1.83, 0.917 and 0.366 mm. per second actually used. All of the settled products contained grains of mineral heavier than quartz and these grains were smaller than the quartz grains.

TABLE 254.—SIZING TESTS ON SORTED PRODUCTS IN MILL 28*.

	No. 1 Hydraulic Classifier.										No. 1 Surface Current Box Classifier.				(a)	
	Feed.		First Spigot.		Second Spigot.		Third Spigot.		Fourth Spigot.		First Spigot.		Second Spigot.		Spigot.	
Number in Fig. 538.	9 (Fig 537)		10		11		12		13		14		15		16	
Through	Percent.	Cumulative Percent.	Percent.	Cumulative Percent.	Percent.	Cumulative Percent.	Percent.	Cumulative Percent.	Percent.	Cumulative Percent.	Percent.	Cumulative Percent.	Percent.	Cumulative Percent.	Percent.	Cumulative Percent.
2.69 on 1.89 mm (b)	....	....	0.3	0.3	....	....	....	....	....	....	....	....	....	....	....	....
1.89 on 1.49 mm	5.6	5.6	28.5	28.8	0.1	0.1	....	....	....	....	....	....	....	....	....	....
1.49 on 0.945 mm	21.2	26.8	67.1	95.9	54.0	54.1	36.4	36.4	3.1	3.1	....	....	....	....	....	....
0.945 on 0.667 mm	16.3	43.1	3.1	99.0	36.3	90.4	43.3	79.7	30.8	33.9	0.04	0.04	....	....	....	....
0.667 on 0.498 mm (b)	13.7	56.8	0.3	99.3	7.7	98.1	10.7	90.4	32.5	66.4	0.1	0.1	....	....	....	....
0.498 on 0.371 mm	5.6	62.4	....	....	0.9	99.0	3.0	93.4	12.1	78.5	0.1	0.2	0.1	0.1	....	....
0.371 on 0.270 mm	8.9	71.3	....	....	0.7	99.7	3.0	96.4	13.2	91.7	0.5	0.7	0.2	0.3	....	....
0.270 on 0.158 mm	13.8	85.1	....	....	0.2	99.9	2.4	98.8	7.7	99.4	3.2	3.9	0.9	1.2	0.08	0.1
0.158 on 0.119 mm	3.8	88.9	....	....	....	....	0.5	99.3	0.2	99.6	3.0	6.9	0.7	1.9	0.1	0.2
0.119 on 0.073 mm	5.6	94.5	....	....	....	....	0.4	99.7	0.2	99.8	21.1	28.0	15.4	17.3	0.9	1.1
0.073 on 0.069 mm (b)	0.9	95.4	....	....	....	....	....	....	....	....	6.8	34.8	6.5	23.8	0.8	1.9
0.069 on 0.047 mm	....	....	....	....	....	....	....	....	....	....	52.8	87.6	65.5	89.3	20.5	22.4
0.047 on 0.034 mm	....	....	....	....	0.1	....	....	....	....	....	8.0	95.6	7.1	96.4	34.1	56.5
0.034 on 0.025 mm	4.4	....	....	....	....	....	0.3	....	0.2	....	1.8	97.4	1.9	98.3	23.2	79.7
0.025 on 0.019 mm	....	....	....	....	....	....	....	....	....	....	0.3	97.7	0.5	98.8	9.8	89.5
0.019 on 0.012 mm	....	....	....	....	....	....	....	....	....	....	0.2	97.9	1.4	....	3.8	93.3
0.012 mm	....	....	....	....	....	....	....	....	....	....	2.0	....	....	....	5.6	....
Total	99.8	....	99.3	....	100.0	....	100.0	....	100.0	....	99.94	....	10.02	....	98.9	....

* The significance of the columns headed "Cumulative percent." is explained in § 868–§ 866.

(a) No. 1 whole current box classifier. (b) Round hole sieves were used down to and including 0.498 mm.; then square holes down to and including 0.069 mm. Below 0.069 mm. settling in water was used, and the sizes given are merely diameters of quartz which correspond to settling velocities of 7.33, 3.67, 1.83, 0.917 and 0.366 mm. per second actually used. All of the settled products contained some grains of mineral heavier than quartz and these grains were smaller than the quartz grains.

TABLE 255.—SIZING TESTS ON SORTED PRODUCTS IN MILL 30.*

	No. 1 Hydraulic Classifier.								Whole Current Box Classifier.					
	Feed.		1st Spigot		2d Spigot.		3d Spigot.		1st Spigot		2d Spigot.		Overflow.	
Number in Fig. 540.	6 (Fig. 539)		7		8		9		10		11		12	
	Percent.	Cumulative Percent.	Percent.	Cumulative Percent.	Percent.	Cumulative Percent.	Percent.	Cumulative Percent.	Percent.	Cumulative Percent.	Percent.	Cumulative Percent.	Percent.	Cumulative Percent.
Through 5.61 on 3.94 mm (a)	....	.....	0.1	0.1	....	.....	....	.....	....	.....	....	.....	....	.....
Through 3.94 on 2.69 mm	0.5	0.5	1.1	1.2	0.5	0.5	....	.....	....	.....	....	.....	....	.....
Through 2.69 on 1.89 mm	6.4	6.9	14.2	15.4	6.7	7.2	0.2	0.2	....	.....	....	.....	....	.....
Through 1.89 on 1.49 mm	9.4	16.3	17.4	32.8	10.5	17.7	0.8	1.0	....	.....	....	.....	....	.....
Through 1.49 on 0.945 mm	20.5	36.8	29.2	62.0	24.4	42.1	3.8	4.8	....	.....	0.3	0.3	....	.....
Through 0.945 on 0.667 mm	14.2	51.0	16.3	78.3	21.4	63.5	10.3	15.1	0.6	(b)	1.1	1.4	....	.....
Through 0.667 on 0.493 mm (a)	11.3	62.3	10.1	88.4	17.5	81.0	23.0	38.1	0.3	0.3	2.5	3.9	....	.....
Through 0.493 on 0.371 mm	2.6	64.9	2.1	90.5	2.7	83.7	5.6	43.7	0.5	0.8	2.7	6.6	0.4	(b)
Through 0.371 on 0.270 mm	6.0	70.9	3.8	94.3	7.0	90.7	16.2	59.9	1.5	2.3	7.3	13.9	0.2	0.2
Through 0.270 on 0.158 mm	9.7	80.6	3.7	98.0	6.5	97.2	25.8	85.7	8.2	10.5	26.3	40.2	1.3	1.5
Through 0.158 on 0.119 mm	3.3	83.9	0.7	98.7	1.2	98.4	6.2	91.9	4.1	14.6	13.0	53.2	1.9	3.4
Through 0.119 on 0.073 mm	4.3	88.2	0.6	99.3	0.8	99.2	5.1	97.0	9.4	24.0	19.3	72.5	10.3	13.7
Through 0.073 on 0.069 mm (a)	0.9	89.1	0.1	99.4	0.1	99.3	0.6	97.6	1.5	25.5	4.0	76.5	2.5	16.2
Through 0.069 on 0.047 mm									11.5	37.0	9.8	86.3	17.7	33.9
Through 0.047 on 0.034 mm									12.3	49.3	6.2	92.5	27.1	61.0
Through 0.034 on 0.025 mm									11.4	60.7	2.4	94.9	17.1	78.1
Through 0.025 on 0.019 mm	9.5	.....	0.4	.....	0.3	.....	1.7	....	8.2	68.9	1.1	96.0	6.5	84.6
Through 0.019 on 0.012 mm									6.4	75.3	0.6	96.6	3.1	87.7
Through 0.012 mm									23.6	.....	2.4	.....	11.2	.....
Total	98.6	.....	99.8	.....	99.6	.....	99.3	.....	99.5	.....	99.0	.....	99.3	.....

* The significance of the columns headed "Cumulative percent." is explained in § 863–§ 866.

(a) Round hole sieves were used down to and including 0.493 mm.; then square holes down to and including 0.069 mm. Below 0.069 mm. settling in water was used and the sizes given are merely diameters of quartz which correspond to settling velocities of 7.33, 3.67, 1.83, 0.917 and 0.366 mm. per second actually used. All of the settled products contained some grains of mineral heavier than quartz and these grains were smaller than the quartz grains. (b) This was all foreign material such as chips, etc.

TABLE 256.—SIZING TESTS OF SORTED PRODUCTS IN MILL 38.*

	No. 1 Unwatering Box.		No. 1 Hydraulic Classifier.										No. 1 Whole Current Box Classifier			
	Overflow.		1st Spigot.		2d Spigot.		3d Spigot		4th Spigot.		Overflow		Spigot.		Overflow	
Number in Fig. 542.	?		5		6		7		8		10		11		12	
Through	Percent.	Cumulative Percent.	Percent.	Cumulative Percent.	Percent.	Cumulative Percent.	Percent.	Cumulative Percent.	Percent.	Cumulative Percent.	Percent.	Cumulative Percent.	Percent.	Cumulative Percent.	Percent.	Cumulative Percent.
3.94 on 2.69 mm (a)	.....	.....	0.2	0.2	0.05	0.05	....	.....	.....	.....	....	.....	....	....	.....	....
2.69 on 1.89 mm	.....	.....	6.4	6.6	1.9	1.95	0.4	0.4	0.04	0.04	....	.....	....	....	.....	....
1.89 on 1.49 mm	.....	.....	11.9	18.5	4.7	6.65	1.4	1.8	0.3	0.3	....	.....	....	....	.....	....
1.49 on 0.945 mm	.....	.....	26.3	44.8	16.4	23.05	7.2	9.0	2.1	2.4	....	.....	....	....	.....	....
0.945 on 0.667 mm	.....	.....	21.0	65.8	18.7	41.75	13.0	22.0	5.8	8.2	....	.....	....	....	.....	....
0.667 on 0.493 mm (a)	.....	.....	17.1	82.9	21.3	63.05	22.4	44.4	14.8	23.0	....	.....	....	....	.....	....
0.493 on 0.371 mm	.....	.....	3.9	86.8	4.5	67.55	5.0	49.4	6.0	29.0	0.2	0.2	1.2	1.2	.....	....
0.371 on 0.270 mm	0.1	0.1	5.7	92.5	11.8	79.35	15.8	65.2	18.0	47.0	0.3	0.5	2.1	3.3	.....	....
0.270 on 0.158 mm	1.0	1.1	5.5	98.0	14.6	93.95	23.8	89.0	33.0	80.0	4.7	5.2	12.9	16.2	.....	....
0.158 on 0.119 mm	1.4	2.5	0.8	98.8	3.4	97.35	5.2	94.2	10.9	90.9	4.9	10.1	7.9	24.1	.....	....
0.119 on 0.073 mm	5.3	7.8	0.5	99.3	1.8	99.15	4.6	98.8	7.4	98.3	15.8	25.9	13.7	37.8	.....	....
0.073 on 0.069 mm (a)	1.8	9.6	0.09	99.3	0.08	99.23	0.2	99.0	0.5	98.8	2.3	28.2	2.6	40.4	.....	....
0.069 on 0.047 mm	12.4	22.0									12.9	41.1	13.7	54.1	0.7	0.7
0.047 on 0.034 mm	5.8	27.8									9.4	50.5	9.0	63.1	1.1	1.8
0.034 on 0.025 mm	6.0	33.8	0.2	....	0.4	.....	0.8	.....	1.2	...	6.6	57.1	6.1	69.2	7.3	9.1
0.025 on 0.019 mm	7.5	41.3									8.6	65.7	5.7	74.9	15.3	24.4
0.019 on 0.012 mm	13.6	54.9									8.7	74.4	6.0	80.9	27.5	51.9
0.012 mm	46.3	....									25.4	.....	17.4	....	48.1	....
Total	101.2	.....	99.52	....	99.63	.....	99.8	.....	100.04	.....	99.8	.....	98.3	....	100.0	....

* The significance of the columns headed "Cumulative percent." is explained in § 863–§ 866.

(a) Round hole sieves were used down to and including 0.493 mm.; then square holes down to and including 0.069 mm. Below 0.069 mm. settling in water was used, and the sizes given are merely diameters of quartz which correspond to settling velocities of 7.33, 3.67, 1.03, 0.917, and 0.366 mm. per second actually used. All of the settled products contained some grains of mineral heavier than quartz, and these grains were smaller than the quartz grains.

BIBLIOGRAPHY OF CLASSIFIERS.

This will be found at the end of Chapter XII.

CHAPTER XII.

LAWS OF CLASSIFYING BY FREE SETTLING IN WATER.

§ 353. FREE SETTLING AND HINDERED SETTLING DEFINED.—In order to intelligently design hydraulic classifiers, box classifiers, settling tanks and jigs, the laws governing the rate of settling of particles in water must be understood.

There are two conditions of settling of grains that are recognized as distinct from each other and whose laws must be studied independently. They are called falling under free settling conditions and falling under hindered settling conditions.

Free settling is where individual particles fall freely, either in still water or against an opposing upward current, without being hindered by other particles. The classifiers and settling tanks are instances of this principle.

Hindered settling is where particles of mixed sizes, shapes and gravities in a crowded mass, yet free to move among themselves, are sorted in a rising current of water, the velocity of which is much less than the free falling velocity of the particles, but yet enough so that the particles are in motion. The arrangement of the particles is so positive that if one of them be moved either upward or downward from its chosen companions, it will be found, when set free, to return immediately to practically the same group as before. The jig beds are instances of this principle. The consideration of hindered settling will be reserved for the chapter on jigs, and only free settling will be here taken up.

§ 354. FREE SETTLING, GENERAL PRINCIPLES.—The conditions affecting free settling will be first considered. The rate of falling of particles under free settling conditions depends, other things being equal in each case, upon:

(*1*) *Specific gravity.*—Of two particles having different specific gravities, that having the higher will fall faster than that having the lower.

(*2*) *Size.*—Of two particles the larger will settle faster in the water than the smaller.

The specific gravity and size have a further effect upon the rate of acceleration of the particles during the time they are acquiring their full velocity, that is, before they reach the point where the friction of the water plus the force of the rising current, if there be any, balances the force of gravity. This effect is, that of two particles which are equal settling, the smaller particle with higher specific gravity reaches its full velocity quicker than the larger particle with lower specific gravity, or in other words, it has greater acceleration.

(*3*) *Shape.*—Of particles which just pass through the same screen, the roundish grain settles faster than the long, narrow grain, and the latter settles faster than the flat grain.

(*4*) *Air bubbles.*—Of two particles, one of which retains adhering air bubbles, while the other does not, the latter will settle most rapidly. Water is sometimes so charged with air that bubbles form upon immersed grains and tend to float them.

(*5*) *Magnetism.*—Of two groups of particles, one of which is strongly magnetic, while the other is not, the former may form a clot, owing to the mutual attraction of the particles, and fall much more rapidly than the latter in which the particles fall individually.

(6) *Density of Liquids.*—In two liquids of different density, the rate of settling of a particle is more rapid in the lighter liquid. This idea may be carried so far as to have a liquid of a density greater than the specific gravity of the ore particles, and the particles will then float on its surface. Again, there may be particles of two different specific gravities and the density of the liquid lies between them, in which case the particles of low specfic gravity will float, while those of high will sink, and a separation will be effected thereby, according to the principle of *intermediate density.*

(7) *Viscosity.*—In two liquids of different fluidity, the rate of settling of a particle is more rapid in the more fluid liquid.

§ 355. SORTING TUBE INVESTIGATION.—The author has investigated this question of the rate of settling under free settling conditions. The purest available samples of a number of minerals were obtained and their specific gravities carefully determined. The results are shown in Table 257. They are averages of three or four closely agreeing tests.

TABLE 257.—SPECIFIC GRAVITIES OF MINERALS USED FOR TESTS.

Mineral.	Specific Gravity.	Mineral.	Specific Gravity.
Anthracite	1.473	Arsenopyrite	5.627
Quartz	2.640	Cassiterite	6.261
Epidote	3.380	Antimony (artificial)	6.706
Sphalerite	4.046	Wolframite	6.987
Pyrrhotite	4.506	Galena (cubic)	7.586
Magnetite	4.987	Copper (Lake Superior)	8.479
Chalcocite	5.334		

A series of sieves arranged in a nest was prepared and the diameters of the holes were carefully determined, as shown in Table 258. Each mineral was then

TABLE 258.—COMPUTATION OF GRAIN SIZES.

Mesh.	Meshes per Linear Inch one way.	Diameter of Wire.	Net Linear Size of Hole.	Meshes per Linear Inch the other way.	Diameter of Wire.	Net Linear Size of Hole.	Average Net Linear Size of Hole.		Average of Size and of one above it.	Ratio of Linear Size of Hole to one Below it.
		Inches.	Inches.		Inches.	Inches.	Inches.	Mm.	Mm.	
3	3	0.0508	0.2880	3	0.0508	0.2880	0.2880	7.188	.....	1.36
4	3.75	0.0471	0.2196	$4\frac{1}{16}$	0.0447	0.1977	0.2087	5.301	6.244	1.35
5	5.25	0.0404	0.1500	5	0.0404	0.1596	0.1548	3.932	4.616	1.17
6	6	0.0352	0.1315	5.9	0.0365	0.1330	0.1322	3.358	3.645	1.31
8	8	0.9280	0.0970	7.5	0.0279	0.1054	0.1012	2.570	2.964	a 1.22 b 1.36
10 (old) (c)	10	0.0250	0.0750	$8\frac{5}{8}$	0.0250	0.0909	0.0830	2.108	2.339	1.34
10(new)(c)	10.4	0.0250	0.0712	10	0.0220	0.0780	0.0746	1.895	2.233	1.21
12	12	0.0221	0.0613	11.8	0.0221	0.0626	0.0619	1.572	a 1.840 b 1.734	1.20
14	14	0.0197	0.0517	14	0.0197	0.0517	0.0517	1.313	1.443	1.10
16	16	0.0183	0.0443	14.6	0.0183	0.0502	0.0472	1.199	1.256	1.22
18	18	0.0170	0.0386	18.4	0.0158	0.0386	0.0386	0.980	1.090	1.08
20	18.8	0.0161	0.0371	20	0.0156	0.0344	0.0357	0.907	0.944	1.19
24	22	0.0133	0.0322	24	0.0138	0.0279	0.0300	0.762	0.835	1.35
30	28	0.0124	0.0233	30	0.0121	0.0213	0.0223	0.566	0.664	1.33
40	35	0.0100	0.0186	40	0.0100	0.0150	0.0168	0.427	0.496	1.22
50	40	0.0090	0.0160	50	0.0083	0.0117	0.0138	0.351	0.389	1.27
60	61.5	0.0061	0.0061	47	0.0076	0.0136	0.0109	0.277	0.314	1.35
80	67	0.0055	0.0094	81	0.0055	0.0068	0.0081	0.206	0.241	1.50
100	101	0.0047	0 0052	102	0.0043	0.0055	0.0054	0.137	0.179	1.06
120	116	0.0034	0.0052	120	0.0034	0.0049	0.0051	0.130	0.134	1.21
140	128	0.0034	0.0044	136	0.0034	0.0039	0.0042	0.107	0.119	.....

(a) With old 10 mesh. (b) With new 10 mesh. (c) The old sieve was used for sizing during the free and hindered settling and the pulsion jig experiments. The new sieve was used on the later jigging experiments.

sized by the series of sieves, yielding a series of products ranging from the coarsest to the finest. The average diameter of the grains contained in any one product, for example those particles which passed through 30-mesh sieve and

rested on 40-mesh, was assumed to be the average of the diameters of the two sieve holes. Some writers have used factors obtained by experiment for obtaining these values, but the author thinks that this simple basis for computation, which can be at any time reproduced, is preferable to one which involves the use of a coefficient which may or may not be correct.

TABLE 259.—SORTING TUBE RESULTS—FASTEST GRAINS.

		Copper.	Galena.	Wolframite.	Antimony.	Cassiterite.	Arsenopyrite	Chalcocite.	Magnetite.	Pyrrhotite.	Sphalerite.	Epidote.	Quartz.	Anthracite.
Specific Gravity		8.479	7.586	6.937	6.706	6.261	5.627	5.334	4.987	4.508	4.046	3.380	2.640	1.473
Screen Meshes.	Average Diameter of Grains in Millimeters	Velocity in mm. per Second.	Velocity in mm. per Second.	Velocity in mm. per Second.	Velocity in mm. per Second.	Velocity in mm. per Second.	Velocity in mm. per Second.	Velocity in mm. per Second.	Velocity in mm. per Second.	Velocity in mm. per Second.	Velocity in mm. per Second	Velocity in mm. per Second.	Velocity in mm. per Second.	Velocity in mm. per Second.
10—12	1.840	447.1	434.0	407.2	411.0	408.1	391.7	338.0	341.0	335.7	266.0	267.2	221.1	95.1
12—14	1.443	416.8	406.4	380.2	362.9	369.8	344.0	308.6	310.0	306.7	247.5	237.9	185.8	81.1
14—16	1.256	387.0	385.7	357.9	335.9	348.9	329.2	283.5	289.9	277.1	231.7	224.0	167.1	76.9
16—18	1.090	357.9	357.0	334.6	312.9	330.7	310.6	275.1	270.4	260.3	216.3	212.0	156.7	68.7
18—20	0.944	319.8	326.7	303.8	278.3	294.7	269.8	235.8	238.1	228.2	197.4	185.9	142.2	59.9
20—24	0.835	316.7	310.6	273.9	265.4	275.1	261.5	221.1	221.2	210.6	181.3	170.8	133.3	55.7
24—30	0.664	294.2	275.7	246.6	238.5	244.4	233.6	202.8	202.8	187.9	159.0	154.6	116.7	48.3
30—40	0.496	225.9	226.4	202.8	188.3	194.1	178.3	165.8	165.9	161.5	132.7	126.7	89.5	41.4
40—50	0.389	183.3	185.8	168.2	165.2	162.7	149.1	133.6	121.0	131.2	105.0	102.9	73.1	32.5
50—60	0.314	147.8	154.0	140.9	139.0	140.5	126.6	116.3	.....	105.5	88.8	84.2	61.3	26.4
60—80	0.241	123.7	122.4	117.9	112.4	112.4	102.7	93.1	.....	84.8	70.7	69.4	51.8	18.8
80—100	0.172	94.5	90.9	86.1	84.2	82.2	75.0	67.3	.....	63.0	53.8	49.7	35.0	16.3
100—120	0.134	67.0	67.4	62.8	72.4	60.6	51.4	49.9	.....	48.6	39.7	36.9	24.2	12.5
120—140	0.119	58.5	59.6	58.0	66.9	54.7	48.3	45.8	.....	44.3	36.5	34.2	20.2	(a)9.8

(a) Measured upon 305 mm. fall, instead of 2.438 mm. [From *a* to *b*, Fig. 286.]

TABLE 260.—SORTING TUBE RESULTS—SLOWEST GRAINS.

		Copper.	Galena.	Wolframite.	Antimony.	Cassiterite.	Arsenopyrite	Chalcocite.	Magnetite.	Pyrrhotite.	Sphalerite.	Epidote.	Quartz.	Anthracite.
Specific Gravity		8.479	7.586	6.937	6.706	6.261	5.627	5.334	4.987	4.508	4.046	3.380	2.640	1.473
Screen Meshes.	Average Diameter of Grains in Millimeters	Velocity in mm. per Second.	Velocity in mm. per Second.	Velocity in mm. per Second.	Velocity in mm. per Second.	Velocity in mm. per Second.	Velocity in mm. per Second.	Velocity in mm. per Second.	Velocity in mm. per Second.	Velocity in mm. per Second.	Velocity in mm. per Second.	Velocity in mm. per Second.	Velocity in mm. per Second.	Velocity in mm. per Second.
10—12	1.840	232.7	325.7	267.8	252.2	272.5	246.3	199.8	237.3	195.1	184.1	159.9	126.8	35.1
12—14	1.443	208.4	306.4	244.5	210.5	218.4	210.6	162.0	200.5	161.0	164.2	147.1	109.5	29.9
14—16	1.256	188.6	284.4	209.7	206.2	194.3	185.2	147.3	185.9	149.4	150.2	126.6	110.8	25.2
16—18	1.090	176.0	245.5	189.0	173.4	179.0	147.3	123.7	158.7	130.9	135.3	107.9	97.7	a 21.4
18—20	0.944	146.9	230.0	159.9	154.4	166.4	132.2	111.8	136.6	117.2	121.6	102.0	86.3	20.8
20—24	0.835	139.9	207.1	146.0	135.5	146.0	106.7	102.2	119.5	108.6	104.2	90.4	71.1	19.0
24—30	0.664	110.8	167.1	116.1	112.6	114.2	75.2	85.0	101.6	80.1	77.8	a 49.4	56.4	14.2
30—40	0.496	a 79.4	132.2	85.3	87.0	93.3	56.4	53.0	80.9	51.1	57.4	33.4	40.0	10.5
40—50	0.389	57.0	101.6	63.8	65.9	78.2	42.0	a 41.2	55.4	a 39.5	41.4	26.8	32.0	8.0
50—60	0.314	44.8	84.7	a 48.6	35.5	55.0	29.3	33.0	.....	26.1	32.4	18.5	26.1	5.8
60—80	0.241	33.1	53.0	34.2	a 30.0	36.4	15.2	19.0	.....	16.5	20.3	9.9	16.8	3.8
80—100	0.172	23.1	33.7	19.5	14.2	.....	8.6	9.3	.....	10.3	12.2	5.2	9.0	2.1
100—120	0.134	16.1	23.7	13.5	11.5	.....	3.4	6.2	.....	6.3	7.7	3.9	5.8	1.5
120—140	0.119	13.6	21.0	11.7	9.9	.....	.....	6.7	.....	5.4	7.4	3.5	5.3	1.1

(a) This value and all below it in the same column was measured on 305 mm. fall instead of 2.438 mm. [From *a* to *b*, Fig. 286.]

A sorting tube, about 50.8 mm. diameter, was prepared, having the spaces marked upon it as indicated in Fig. 286. The velocities of settling under free settling conditions were then obtained by allowing a number of grains, perhaps

FIG. 286.—SORTING TUBE.

fifty, from each of the products obtained by the sizing, to fall the distance from *a* to *c* in the sorting tube, and noting the period required for the passage of the fastest grain, and also the time required for approximately 90% of the grains to pass. This proportion of 90% was preferred to the observation of the slowest grain, because the slowest often lags an indefinite distance behind. The results of these tests are given for fastest grains in Table 259, and for slowest, that is, for 90%, in Table 260. Each result in the table is an average obtained from several tests, in some instances as many as 20. The distance of 152 mm. at the top, was allowed for the grains to reach full speed, and the short distance, *ab*, of 305 mm. was used with the smallest sizes of grains. In all cases the grains were thoroughly wetted and in some cases were boiled in water before being dropped, in order to guarantee their freedom from air bubbles.

§ 356. DISCUSSION OF SORTING TUBE RESULTS.—Some remarks are called for by apparent inconsistencies in Table 259, of fastest grains. In nearly every instance, cassiterite fell faster than antimony, although its specific gravity is lower. The low specific gravity given is explained by the presence of a little quartz in included grains with the cassiterite, while the free grains probably have a higher specific gravity than antimony, and fall ahead of that metal, as they should. The inconsistency between chalcocite and magnetite is due to the shape of the particles; magnetite has rounded or cubical grains; chalcocite is very flat and scaly. Copper does not lead galena nearly as much as one would expect. This is due to the shape of the particles. The copper was Calumet and Hecla stamp-copper, as free as possible from rock, the pieces being all more or less flattened, and the finer particles to some extent arborescent and leaf-like, while the galena was taken from large cubes of pure Wisconsin mineral. The work upon magnetite broke down at the 60-mesh sieve, sizes below attracting each other so much that the large flakes resulting made a test impossible.

The velocities of the slowest grains, given in Table 260, are perhaps of less value than those of the fastest particles, since there is a certain personal equation in estimating the 90%, which may vary. But for other reasons, these values are of very great interest, and play an important part in the whole ore-dressing discussion. Toward the lower ends of these columns frequent inconsistencies will be noted. They are, however, not very serious, and are accounted for, partly as in the case of the fastest grains, and partly by the difficulty in judging the 90%.

The results given in Tables 259 and 260 have been plotted with the ordinates representing diameters of grains in millimeters, and abscissæ representing velocities of fall in millimeters per second, and from the plotted points smooth curves have been drawn which show directly the velocity of either the fastest or the slowest grains of any diameter for the thirteen different minerals. The curves for six of the thirteen minerals are shown in Fig. 287. These were chosen as representative as it would obscure the plot to put the curves of all thirteen minerals in one figure. These curves are further designed to be used for all calculations and estimates where the velocity of fall has to be known. To make the work complete, curves would have to be drawn for each individual mineral with which the ore dresser has to deal, but the author believes that from the curves of the six minerals sufficiently accurate figures for velocities of other minerals may be found by interpolation, if the specific gravity and peculiarities of cleavage of the other minerals are known. It will be noticed that one cannot obtain average figures directly from these curves, but that one gets for a given size of grain, a range of velocities with which it may fall or, on the other hand, for a

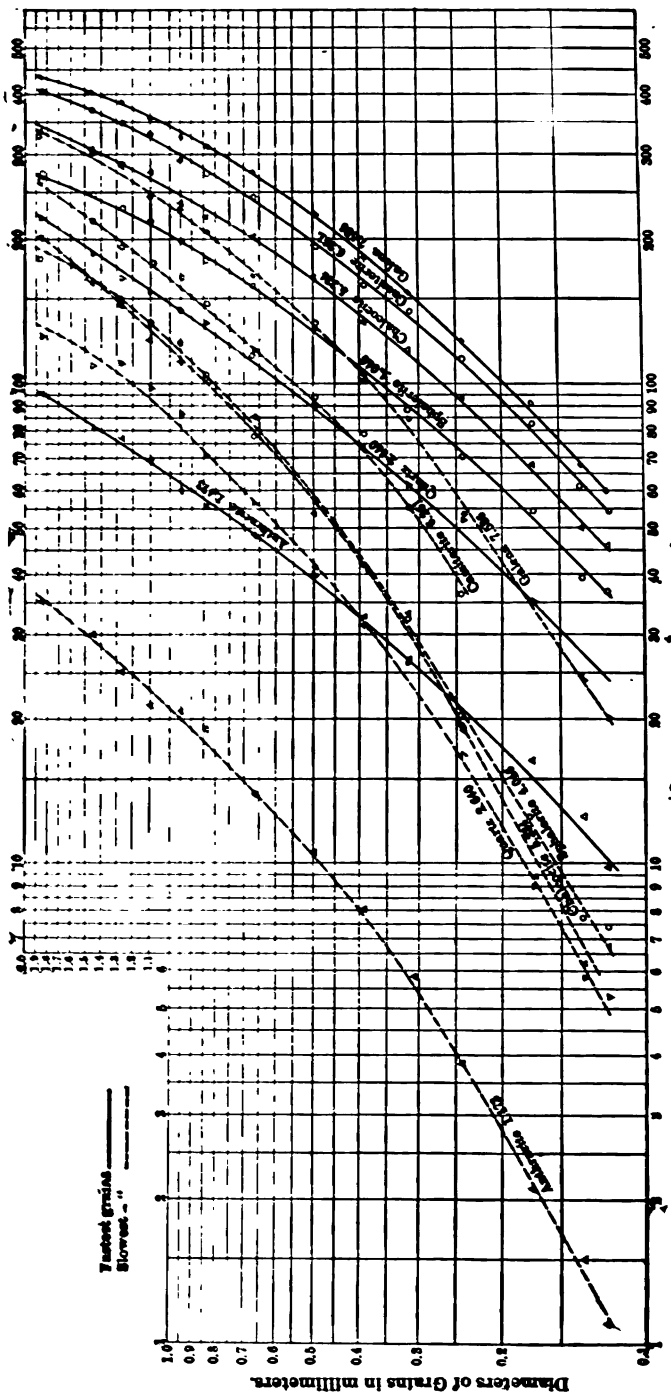

FIG. 287.—CURVES OF FREE SETTLING GRAINS ON LOGARITHMIC PAPER.

given velocity of fall, the range of diameters of particles that may have that velocity. The curve of the average grains would lie somewhere between the curves of the fastest and slowest grains, but not necessarily midway. The impression that the author received by the eye, from watching the experiments, was that the curve of average grains would lie about one-third the distance from the fastest to the slowest grains.

This relation of various minerals may be expressed approximately by means of free settling ratios, that is, the ratios of the diameters of the grains of different minerals which are equal settling. To illustrate this, the columns headed "Diameter" in Table 261 have been taken from the curves of fastest grains and show the diameters of grains which correspond to various velocities. From these diameters the free settling ratios referred to quartz have been computed by dividing the diameter of the quartz successively by each of the diameters of the other minerals in the same vertical column. The things to be noticed in this table are: (1) that the ratios increase as the specific gravity of the mineral increases, (2) that the ratio increases with each mineral as the size of grains increases, (3) that the ratios for the lighter minerals are larger than, and those for the heavier minerals are smaller than the ratios given in the last column, which are calculated by substituting the proper values for specific gravity and diameters in Rittinger's formula as given in § 358.

TABLE 261.—DIAMETERS CORRESPONDING TO VARIOUS VELOCITIES OF FALL OF FASTEST GRAINS AND RATIOS FOR OBTAINING THE DIAMETER OF QUARTZ WHICH WILL BE EQUAL SETTLING WITH THE MINERAL SPECIFIED.

	Velocities of Fall in Millimeters per Second.														Rittinger's Ratios.
	32		45.2		64		90.5		128		181		256	362	
	Diameter	Ratio of Quartz.	Diameter	Ratio of Quartz.	Diameter	Ratio of Quartz.	Diameter	Ratio of Quartz.	Diameter	Ratio of Quartz.	Diameter	Ratio of Quartz.	Diameter	Diameter	
	Mm.		Mm.		Mm.		Mm.		Mm.		Mm.		Mm.	Mm.	
Anthracite....	0.39	0.41	0.59	0.37	0.98	0.34	1.68	0.30	.....	.....	.....	.....	.....	.....	0.288
Quartz.....	0.16	.....	0.22	.....	0.33	.....	0.51	.....	0.81	.....	1.36	.....	.....	.....	.....
Epidote.....	0.111	1.4	0.15	1.5	0.22	1.5	0.33	1.5	0.51	1.6	0.87	1.6	1.68	.....	1.45
Sphalerite....	0.104	1.5	0.14	1.6	0.21	1.6	0.31	1.6	0.49	1.7	0.84	1.6	1.57	.....	1.85
Pyrrhotite....	.....	.....	0.12	1.8	0.18	1.8	0.26	2.0	0.39	2.1	0.63	2.2	1.08	.....	2.14
Chalcocite....	.....	.....	0.118	1.9	0.16	2.1	0.24	2.1	0.36	2.2	0.58	2.3	1.02	.....	2.64
Arsenopyrite..	.....	.....	0.112	1.9	0.15	2.2	0.21	2.4	0.31	2.6	0.48	2.8	0.82	1.55	2.82
Cassiterite....	.....	.....	0.097	2.3	0.14	2.4	0.19	2.7	0.28	2.9	0.44	3.1	0.73	1.37	3.32
Antimony....	.....	.....	.....	.....	0.13	2.5	0.18	2.8	0.28	2.9	0.45	3.0	0.77	1.45	3.48
Wolframite...	.....	.....	.....	.....	0.13	2.5	0.18	2.8	0.27	3.0	0.43	3.2	0.70	1.32	3.64
Galena.....	.....	.....	.....	.....	0.12	2.7	0.17	3.0	0.25	3.2	0.38	3.6	0.60	1.11	4.01
Copper.....	.....	.....	.....	.....	0.12	2.7	0.17	3.0	0.25	3.2	0.38	3.6	0.58	1.06	4.56

§ 357. TUBULAR CLASSIFIER INVESTIGATION.—As a check upon the work just given and as a means of preparing a perfect set of sorted products for the investigation of sizing upon a surface, the following apparatus was designed and tests made:

The tubular classifier (see Fig. 288), was fed with hydraulic water at *e* at a constant rate, admitted by a dial-cock, at constant pressure, guaranteed by an overflow column-pipe to give constant head. This passes up and overflows at *i*, at any desired speed. If *k* be the average area in square millimeters of the tube *cd*, then the milligrams or cubic millimeters *l* of water delivered per minute at *i*, divided by *k*, will give the upward velocity *m* of the water in millimeters per minute.

$$\frac{l}{k}=m$$

The same result may be obtained in inches per minute by weighing the water in pounds as follows: The pounds of water at 62°F., p, delivered per minute at i, multiplied by 27.712, gives cubic inches, and this product divided by the area r in square inches gives the ascending velocity s in inches per minute.

$$\frac{27.712\,p}{r} = s.$$

The sorted products, for example of quartz and galena, were obtained by feeding at a, in very small quantities at a time, mixed grains of these minerals, which had passed through a limiting sieve of 10 meshes to the linear inch with 2.108-mm. holes, and therefore contained grains of both minerals ranging from that size down to dust. The quantity of sand fed was so small that the volume of sand in the tube at any given time was far less than $\frac{1}{10}$ that of the water. The grains became subject to the action of the current at b. If they were light enough to rise in the current flowing at any given time they were discharged at i. If heavy enough to fall, they passed down to the bulb g. The rising portion c of the tube is 305 mm. long, to give a heavy grain that distance to repent and return. The falling portion d of the tube is also 305 mm. long, to give a light grain the same opportunity. A rotary motion is given to the water in d, to prevent a downward current on one side and an excess of upward current on the other. If the mixed quartz and galena is fed slowly, so that "free settling" conditions prevail, while the water is rising —for example, 40 millimeters per second—it yields two products: the overflow grains which rise in a 40-mm. current; the bulb-grains which fall in the same current. If, now, the above bulb-grains are fed to the tube when the water is rising 50 mm. per second, it again yields two products: overflow grains which rise in a 50-mm. current; and bulb-grains which fall in the same current. This second overflow is defined as consisting of grains of quartz and galena which, under free-settling conditions, fall in a 40-mm. current and rise in a 50-mm. current, and is called a sand sort or a slime sort, according to the size of grains it contains.

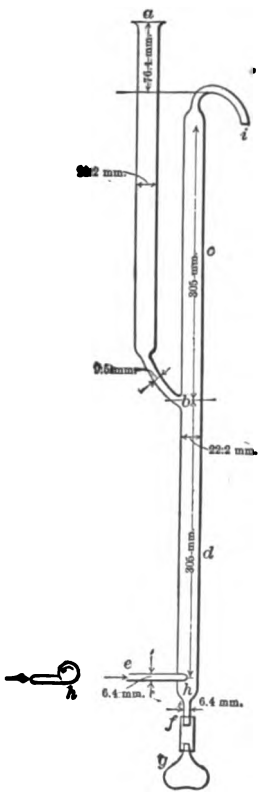

FIG. 288.—TUBULAR CLASSIFIER.

To obtain a complete set of products, as perfectly defined as the above, the water current was rated at frequent intervals all the way from 0.0496 inches (1.261 mm.) per second to 7.8259 inches, (198.777 mm.) per second. And to obtain further information, the length and width of each of ten grains of quartz and also of galena were measured by microscope-micrometer for each product. The average of the ten measures of length and of width (twenty in all), is called the average diameter of the grains. The thickness was not obtained. These figures are given in metric measures in Table 262 together with the ratio of the average diameters of quartz and galena. The specific gravity of the quartz is 2.640 and that of the galena is 7.586. The second part of the table shows the results of similar experiments made with quartz and chalcopyrite, whose specific gravity was 4.167. This table brings out to a more marked degree than the previous work, the fact that the free settling ratio of the quartz and galena is

TABLE 262.—DIAMETERS OF QUARTZ AND GALENA PARTICLES AND OF QUARTZ AND CHALCOPYRITE PARTICLES WHICH ARE EQUAL SETTLING IN THE UPWARD CURRENTS SPECIFIED.

Velocity of Current per Second		Average Diameters		Ratio of Diameter of Quartz to Diameter of Galena	Velocity of Current per Second		Average Diameters		Ratio of Diameter of Quartz to Diameter of Chalcopyrite.
in which Grains Rise.	in which Grains Fall.	of Quartz Grains.	of Galena Grains.		in which Grains Rise.	in which Grains Fall.	of Quartz Grains.	of Chalcopyrite Grains.	
Mm.	Mm.	Mm.	Mm.		Mm.	Mm.	Mm.	Mm.	
1.26	0.	*a* 0.0301	*a* 0.0194	1.55	1.25	0.	*a* 0.0185	*a* 0.0202	.....
2.51	1.26	0.0335	0.0198	1.69	2.50	1.25	0.0444	0.0372	1.19
5.0	2.51	0.0568	0.0292	1.95	5.0	2.50	0.0744	0.0538	1.38
7.4	5.0	0.0772	0.0412	1.87	7.5	5.0	0.0984	0.0748	1.32
10.0	7.4	0.0962	0.0488	2.01	10.0	7.5	0.1282	0.0922	1.39
14.7	10.0	0.1428	0.0618	2.32	15.0	10.0	0.1656	0.1218	1.36
19.8	14.7	0.1875	0.0721	2.60	20.0	15.0	0.1899	0.1205	1.52
.....	.....	.....	.....	.....	25.0	20.0	0.2262	0.1565	1.45
30	19.8	0.2254	0.1032	2.18	30	25.0	0.2926	0.1920	1.47
40	30	0.3416	0.1305	2.62	40	30	0.3572	0.2314	1.54
50	40	0.3880	0.1404	2.76	50	40	0.4621	0.2744	1.68
60	50	0.5241	0.1708	3.07	60	50	0.4950	0.3270	1.51
70	60	0.5892	0.1997	2.95	70	60	0.6108	0.3752	1.62
80	70	0.6590	0.2381	2.77	80	70	0.6826	0.4445	1.31
90	80	0.8604	0.2750	3.13	90	80	0.8454	0.5008	1.69
100	90	1.0234	0.3428	2.99	100	90	1.0036	0.5580	1.80
110	100	1.1494	0.3504	3.26	110	100	1.0928	0.6240	1.75
120	110	1.3216	0.3648	3.62	120	110	1.2896	0.6848	1.88
130	120	1.4224	0.3776	3.77	130	120	1.3760	0.7328	1.88
140	130	1.4256	0.4208	3.39	140	130	1.6620	0.8288	2.01
150	140	1.6032	0.4560	3.52	150	140	1.6176	0.8768	1.84
160	150	1.6848	0.4592	3.67	160	150	1.7856	0.9568	1.87
170	160	1.7488	0.4624	3.78	170	160	1.9088	1.0848	1.76
181	170	1.8032	0.5248	3.44	180	170	1.9056	1.1088	1.72
199	181	1.9744	0.5776	3.42	190	180	2.1248	1.2080	1.76

(*a*) These averages have less value than the others, because the diameters in this case range down to 0.

lower than that given by Rittinger's formula and is a variable, being smaller for finer sizes. The results on chalcopyrite and quartz offer similar evidence to those on galena and quartz.

Further comparison with the curves of the fastest and slowest grains of Fig. 287 shows that these average figures lie about three-fourths of the distance from the fastest to the slowest, instead of only one-third, which, as previously stated, was the impression received by the eye. This discrepancy is probably due to differences in the nature of the two methods of measuring the grains. In the first work, the diameter of the grains was taken as the average of the diameters of a square hole through which they were just able to pass, and a square hole through which they just failed to pass. In the later work, the diameter of the grains was taken as the average of the length and width of several individual grains as they lay in the field of a microscope. It is clear that the taking of averages of length and width gives too high result for comparison with the sifting work, as it is the width which, as a rule, determines whether or not the particle will pass through a given sized hole. It was found by taking averages of widths instead of both lengths and widths, that instead of being three-fourths, the average curve is about two-fifths (not quite down to one-third) of the way from the fastest to the slowest curves. This verifies again the former work. It should be noted that the specific gravity of chalcopyrite is only slightly greater than that of sphalerite, and hence it would be presumed that the average figures for chalcopyrite would be slightly less than three-fourths of the way from the fastest to the slowest of sphalerite. Inspection shows that this is true, three-fifths being about the figure.

§ 358. RITTINGER'S PARABOLIC FORMULA.—Formulas for the rate of settling of particles in water have been derived by Rittinger, Wagoner and others. The parabolic formula of Rittinger, which has been most generally accepted by other authors and which will be taken up first, does not, as he himself acknowledges,

harmonize with the facts observed upon small grains. The principle of the computation is to equate the force of gravity against the resistances which the falling particles have to overcome. For free settling particles, he gives in his treatise three formulas to represent the relation between the diameter of the grains and the rate of falling in water for irregular shaped grains:

$$V=2.73\sqrt{D(\delta-1)} \text{ for roundish grains,}$$

$$V=2.44\sqrt{D(\delta-1)} \text{ for average grains,}$$

$$V=1.92\sqrt{D(\delta-1)} \text{ for flattish grains,}$$

in which V is the velocity in meters per second; D the diameter of the particles in meters; and δ is the specific gravity of the mineral.

From the formula for the average grains, he computes the ratio of the diameters of quartz and galena particles that will be equal settling in water. Taking the specific gravities as given in Table 257, for quartz, 2.640, and for galena, 7.586, and using his formula for the average grain, we should have:

$$\text{for quartz, } V^2=5.9536\ D_1\times1.64,$$

$$\text{for galena, } V^2=5.9536\ D_2\times6.586,$$

where D_1 is the diameter of the grain of quartz and D_2 is the diameter of the grain of galena. For equal-settling particles, we equate the two values of V^2, and deduce:

$$\frac{D_1}{D_2}=\frac{6.586}{1.64}=4.015.$$

This is the method of calculating the diameter ratios or Rittinger's multipliers for various minerals referred to quartz which have been given already in Table 261.

The formula given by Rittinger is that of a parabola, which for average particles may be written:

$$\frac{V^2}{D}=2.44(\delta-1), \text{ or } \frac{V}{D}=C=\text{a constant for each mineral.}$$

Referring to the curve of fastest grains, the velocity of 1-mm. galena is 352 mm. per second. Then the value of C in this case is:

$$\frac{352\times352}{1}=123{,}904.$$

Having obtained the value of C, the various values of V may be found by substituting various values for D in the equation $\frac{V^2}{D}=123{,}904$. In the same way a value of C is found from the curve of slowest grains of galena, as

$$\frac{234\times234}{1}=54{,}756$$

and from this the various values of V for the slowest grains. In Fig. 289, *a* and *b* are the actual and computed curves respectively for the slowest grains of galena; *c* and *d* are the same for the fastest grains. It will be seen that the actual and computed curves have extremely few points in common. Similar formulas have been calculated and curves plotted for all the minerals examined, with practically the same results. This proves that the parabolic formula is not true for small particles. The fact that the parabolic formula does not apply to the slowest grains is evident from an inspection of the actual curve *a* of slowest grains, in Fig. 289, as it clearly reverses its direction of curvature as it approaches the origin of coördinates.

§ 359. WAGONER'S FORMULA.—Luther Wagoner, after an elaborate series of

experiments upon grains below 1 mm. in diameter, finds that the parabolic formula does not apply and concludes that the discrepancy is due to the fact that Rittinger's formula did not take into account: (*a*) the adhesion of the molecules of liquid to each other, (*b*) the adhesion of the liquid to the immersed body, and (*c*) the temperature. The force (*b*) causes the moving particle to have a skin of water adhering to it. The force (*a*) opposes (*b*) and cuts the skin of water down to a constant minimum thickness for each velocity. If with

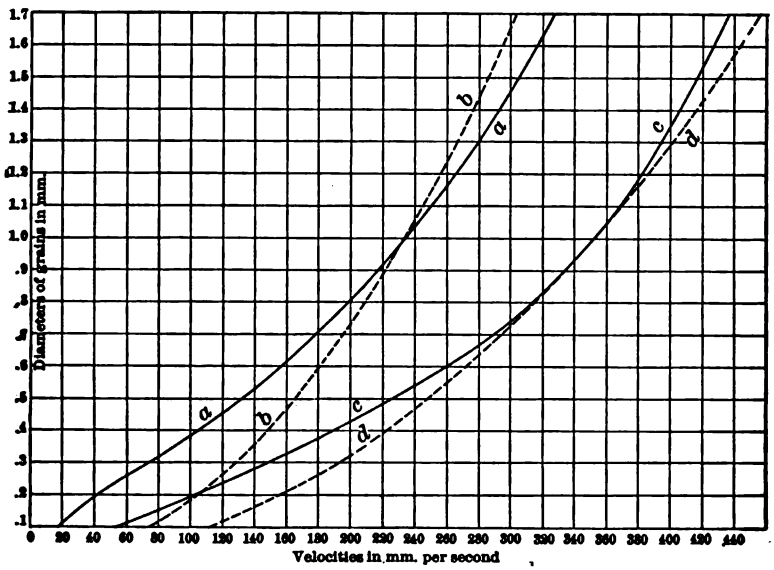

FIG. 289.—ACTUAL AND COMPUTED CURVES OF FALL.

a given velocity, the skin of water is 2 mm. thick, then a cube of quartz 20 mm. in diameter will be much less affected by it than one which is 1 mm. in diameter; for in the first case, the one volume of quartz will be accompanied by only 0.73 volumes of water, while in the second case one volume of quartz will drag along with it 124 volumes of water. But the discrepancy is still greater, for the larger cube falls with a much greater velocity, which tears off more of the water skin.

The formulas derived by Wagoner in this early paper, conforming to the reversed curve, are not here given, because they were based upon a different scheme of measuring the size of grains. He has, however, by using the author's figures, derived a formula for slowest grains, expressing the relations between the diameter and rate of fall of the particles as follows:

$$V = c\,\frac{D^{\frac{3}{2}}}{\sqrt{aD^2+b}}$$

where V is velocity in mm. per second; D is the diameter of the particle in mm. and *a*, *b* and *c* are constants for each specific gravity, having values as shown in Table 263. He points out that the mean value of $(a+b)$ is 1.4156, which is almost equal to $\sqrt{2}$, but is unable to explain it; and further states that if the relations of form, surface and weight to the diameter were known, a more perfect formula might be derived. It should be noted that in all his work, Wagoner has simply dealt with the author's figures on slowest grains.

§ 360. INVESTIGATIONS ON FINE GRAINS.—On moderately fine grains the field does not seem to have been so thoroughly explored. The author's experi-

ments in no case extended below 0.01 mm. and in most cases not below 0.1 mm. From this point down until the finest particles are reached, the author is unable to give any accurate figures showing the rate of settling. Figures which are probably approximately true may be obtained by extending the lower ends of the

TABLE 263.—VALUES OF THE CONSTANTS IN WAGONER'S FORMULA.

Minerals.	Specific Gravity	c.	a.	b.	a+b.	Minerals.	Specific Gravity	c.	a.	b.	a+b.
Copper.....	8.479	187.6	1.0630	0.3510	1.4140	Chalcocite...	5.384	140.5	0.6396	0.7902	1.4298
Galena.....	7.586	283.0	1.0770	0.3220	1.3990	Pyrrhotite..	4.508	140.1	0.5248	0.9159	1.4407
Wolframite..	6.987	205.5	0.9034	0.4897	1.3921	Quartz.....	2.640	100.4	0.9030	0.5195	1.4125
Antimony....	6.706	191.4	0.8799	0.5485	1.4284	Anthracite..	1.473	25.36	0.7815	0.6267	1.4082

curves for fastest and slowest grains in Fig. 287, it being assumed that all the curves started from the origin of coördinates. For want of definite evidence, however, it seemed best not to do this, as later experiments may prove that the curves do not continue regularly to the origin.

On the behavior of finest grains, which are for the most part below the range of microscopic measurement, that is, below 0.00025 mm., several investigations have been made. These have been done more from the standpoint of the geologist, to determine the laws of sedimentation, than from that of the ore dresser. The grains are probably finer than any that the ore dresser will have to consider, but the author has thought it best to give an outline of the more important work done, in order that the reader may understand the new forces that come into play in the settling of such small grains.

J. Thoulet[48] finds after experimenting on kaolin and foraminiferæ (chalk fossils), which were so fine that they were not discernible under the microscope, that very fine particles settle at a practically uniform rate in the same ratio as the difference of density between the solid and liquid; that at and below 23°C. fine particles remain suspended indefinitely in distilled water; that above 23°C. the rate of settling in distilled water increases with the temperature; that pressure, up to 12 atmospheres, has no effect upon settling fine particles.

Dr. Barus[100] finds in regard to the rate of settling of clay and tripolite particles of perhaps 0.00005 mm. diameter and less, that some may be so fine as to be held up for years; that the velocity of settling has no relation to the viscosity of the liquid; that they settle much more rapidly at 100°C. than at 0°C.; that they settle much more rapidly in solutions of acids and salts, and in stronger than in weaker solutions. In an opaque mixture where the particles are nearer together, they settle faster than in a translucent mixture. For particles, the diameter of which was estimated to be about 0.0002 mm., the velocity of settling in distilled water at 15°C. was 0.0000278 mm. per second and at 100°C. 0.000556 mm. per second.

Some experimental results showing the effect of salts and acids upon the rate of settling are given under "Testing" in Chapter XXI.

§ 361. Classification by Free Settling.—The practical application of the principles of free settling for the purpose of obtaining a set of sorted products, may be understood by referring to Fig. 290, which represents the relative positions in vertical columns of particles of two specific gravities, ranging from a maximum diameter to dust, that were started at the same level and have all fallen the same length of time. In each case the diameters increase downward, but the largest grain of the heavier mineral, for example, galena, has fallen much farther than the largest grain of the light mineral, for example, quartz.

The distances these particles have fallen in a unit of time, may also represent velocities, that is to say, the velocity of a rising current that will just lift them.

The grains above *g* will all be lifted by a current *ag* in velocity; the grains above *e* will all be lifted by a current *ae* in velocity; the grains above *d* will all be lifted by a current *ad* in velocity; the grains above *c* will all be lifted by a current *ac* in velocity; the grains above *b* will all be lifted by a current *ab* in velocity. If then, the grains be first submitted to a current *ae*, second to *ad*, third to *ac* and fourth to *ab*, we shall get five products, the grains *eg*, *de*, *cd* and *bc*, which settle in the four currents respectively, and the grains *ab*, which rise in the last current.

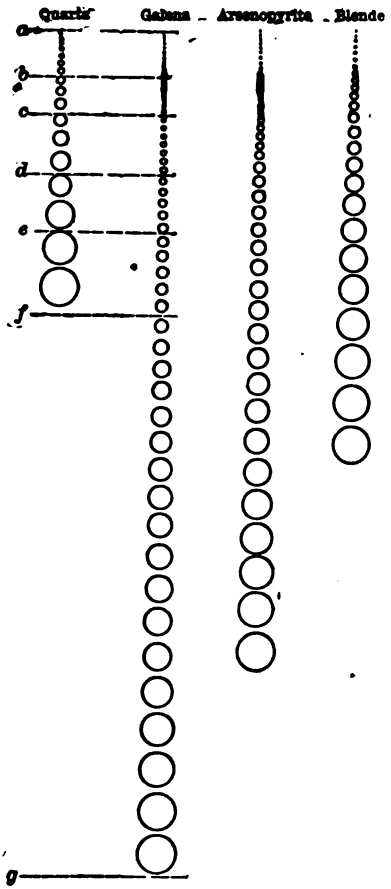

FIG. 290.—GRAPHICAL REPRESENTATION OF FREE SETTLING.

We further notice that the three products *bc*, *cd* and *de* are true sorted products. The galena is always much smaller than the quartz in each case, and we notice that this is not the case in *eg* or in *ab*, the two end products, neither of which is a truly sorted product. The product *ab*, differs so slightly that it is usually treated as a sorted product, but *ef* is totally different and requires treatment adapted to its peculiar constitution.

We may still further note that if instead of the current *ae*, the current *af* was used first, then only pure galena would be found in the product that settled in this current. This method commends itself where the heavy mineral is of very high specific gravity, or where the gangue is in very small per cent. D. W. Brunton reports that, using a cone hydraulic classifier (see Fig. 246), with three cones, fed by material which had passed through a 60-mesh screen, he obtained a first spigot product as rich as the best jig concentrates. In some of the Lake Superior copper mills a highly concentrated product is obtained in this way (see Mill 48 in § 306). Likewise in a chromite mill in Newfoundland the first spigot of the classifier yields the best product in the mill and its amount forms a considerable proportion of the total concentrates. Mill 5 has recently put in a hydraulic classifier (see Figs. 244*f* to 244*h*,) to treat all the tailings of the mill below 0.17 inch (4.32 mm.) which formerly went to waste. They report a considerable saving of good concentrates.

Fig. 290 also illustrates the relations of arsenopyrite and quartz, and blende and quartz.

BIBLIOGRAPHY FOR CLASSIFIERS AND THE LAWS OF CLASSIFYING BY FREE SETTLING IN WATER.

1. Bilharz, O., (1896), "Mech. Aufbereitung," Vol. I., pp. 11, 43, 57, 85. Theory of free settling. Bilharz hydraulic classifier. Siphon separator. Altenberg classifier. Bilharz *spitzlutte*.
2. Callon, J., (1886), "Mining," Vol. III., pp. 47, 58. Theory of free settling. Labyrinth. Pointed boxes. Engis, Thirion and Dorr hydraulic classifiers. Siphon separator.

3. Charleton, A. G., (1884), "Tin Mining," pp. 16, 53, 59. Labyrinth. Pointed boxes.
4. Davies, D. C., (1886), "Metal. Min. and Mining," p. 363. Free settling velocities.
5. Davies, E. H., (1894), "Mach. Metal. Mines," p. 265. Free settling velocities. Hydraulic classifier. Pointed boxes.
6. Eissler, M., (1896), "Metallurgy Gold," p. 152. Pointed boxes. *Spitzlutte.*
7. Eissler, M., (1891), "Metallurgy Silver," pp. 225, 229. Theory. Pointed boxes. *Spitzlutte.* Cone classifier.
8. Foster, C. LeN., (1894), "Ore and Stone Mining," p. 568. Free settling velocities. Pointed boxes. Cone classifier. Lockhart's tubular classifier. Siphon separator.
9. Gaetzschmann, M. F., (1872), "Aufbereitung," Vol. II., p. 210. Many forms of classifiers.
10. Goupillière, Haton de la, (1885), "Exploitation des Mines," Vol. II., pp. 725, 761, 769. Theory. Siphon separator. Dor and Büttgenbach hydraulic classifiers. Pointed boxes.
11. Hunt, R., (1884), "British Mining," pp. 706, 748. Theory. Pointed boxes. Hodge's classifier. Cone classifier.
12. Kirschner, L., (1899), "Erzaufbereitung," Part II., p. 47. Pointed boxes. *Spitzlutte.*
13. Kunhardt, W. B., (1893), "Ore Dressing," pp. 43, 58. Siphon separator. Pointed boxes. *Spitzlutte.*
14. Lamprecht, R., (1888), "Kohlenaufbereitung," p. 63. Several classifiers for coal.
15. Linkenbach, C., (1887), "Aufbereitung der Erze," p. 72. Theory. Pointed boxes.
16. Lock, A. G., (1882), "Gold," p. 1064. Labyrinth. Pointed boxes. *Spitzlutte.*
17. Louis, H., (1894), "Gold Milling," p. 327. Pointed boxes.
18. Rittinger, P. R. von, (1867), "Aufbereitungskunde," pp. 165, 325. Theory. Pointed boxes. *Spitzlutte.* Runs.
19. *Ibid.*, (1870), "Erster Nachtrag," p. 18. Theory.
20. *Ibid.*, (1873), "Zweiter Nachtrag," p. 18. *Spitzlutte.*
21. Rose, T. K., (1894), "Gold," p. 163. Pointed boxes.
22. Sparre, J. von, (1869), "Theorie der Separation." Criticism of Rittinger's theory.
23. Ulzer, F. and Fraenkel, A., (1898), "Chem. Tech. Analysis," p. 43. Schöne's tubular classifier for the mechanical analysis of clays.

---

24. *Am. Inst. Min. Eng.*, Vol. V., (1877), pp. 593, 604. C. M. Rolker. Description of hog trough classifier used at Lake Superior with dimensions, capacity and water used.
25. *Ibid.*, Vol. VI., (1877), p. 483. J. C. F. Randolph. Dimensions of pointed boxes used at Clausthal.
26. *Ibid.*, Vol. VIII., (1880), p. 433. H. S. Munroe. Description and dimensions of old Lake Superior hog trough classifier with figures on capacity and water used by each division.
27. *Ibid.*, Vol. IX., (1881), p. 318. R. H. Richards. Description of small, experimental *spitzlutte* with results obtained therewith.
28. *Ibid.*, pp. 437, 438. Ellis Clark, Jr. Dimensions of pointed boxes and description of Rittinger *spitzlutte* used at Przibram.
29. *Ibid.*, Vol. XI., (1883), p. 231. R. H. Richards. Description and advantages of the Richards-Coggin classifier.
30. *Ibid.*, p. 321. Albert Williams, Jr. Recommends the use of bottom discharge tanks for settling slimes for pan amalgamation. Their advantages over those which are shoveled out, are given.
31. *Ibid.*, Vol. XVIII., (1889), p. 257. H. E. Armitage. Description of the double cone tubular classifier or *spitzlutte*, also of a hopper-shaped unwaterer.
32. *Ibid.*, p. 644. R. H. Richards and A. E. Woodward. Curves drawn from Rittinger's formula for free settling particles.
33. *Ibid.*, Vol. XXII., (1893), p. 227. O. Bilharz. Advantages of the Bilharz over the Rittinger *spitzlutte.*
34. *Ibid.*, p. 647. H. S. Munroe. Description of the Evans classifier with its mode of action and advantages over other hydraulic classifiers.
35. *Ibid.*, Vol. XXIV., (1894), pp. 80, 339. F. M. F. Cazin. Mathematical discussion of theory of settling and criticism of Rittinger's formula for free settling.
36. *Ibid.*, p. 409. R. H. Richards. Results of tests on the velocity of particles falling in water under free settling conditions.
37. *Ibid.*, Vol. XXVI., (1896), p. 624. C. W. Goodale. Discussion of sizing tests and assays of jig tailings, showing the losses resulting from poor work done by the Carkeek, the Evans, the Anaconda and other hydraulic classifiers.
38. *Ibid.*, p. 76. R. H. Richards. Results of tests on the velocity of particles falling in water under free settling conditions.

39. *Ibid.*, Vol. XXVII., (1897), p. 249. R. H. Richards and C. E. Locke. Results of tests on a surface current box classifier.
40. *Ibid.*, Vol. XXVIII., (1898), p. 225. J. E. Johnson, Jr. Description of settling reservoirs for tailings of the Longdale Iron Company.
41. *Am. Jour. Science*, Vol. XXXVII., (1889), p. 121. C. Barus. Discussion of results of experiments on the rate of settling of very fine particles.
42. *Am. Soc. Civ. Eng.*, Vol. XXXVI., (1896), p. 239. E. H. Hooper. Elaborate article on the suspension of solids in and the movement of solids by a horizontal current of water.
43. *Ann. des Mines*, Series V., Vol. IV., (1853), p. 143. V. Pernolet. Results of experiments on velocity of particles falling in water and air.
44. *Ibid.*, Series VI., Vol. XIX., (1871), pp. 310, 342. A. Henry. A general article containing some theory, also taking up labyrinths, pointed boxes, both with and without hydraulic water, the Engis trough classifier, the Dor classifier and the siphon separator used at Mechernich.
45. *Ibid.*, Series VII., Vol. II., (1872), pp. 285, 298. A. Henry. Description of Rittinger *spitzlutte* used at Przibram with dimensions. Dimensions of pointed boxes.
46. *Ibid.*, Series VIII., Vol. V., (1884), p. 507. J. Thoulet. Results of experiments on the falling velocities of spheres of different densities and sizes.
47. *Ibid.*, Vol. VII., (1885), p. 521. A. Badoureau. Mathematical discussion of velocities of particles falling freely in water.
48. *Ibid.*, Vol. XIX., (1891), p. 5. J. Thoulet. Results of experiments on the rate of settling in water of very fine kaolin below the range of microscopic measurement.
49. *Ibid.*, Vol. XX., (1891), pp. 44, 52. M. Bellom. Description of pointed boxes used at Friedrichssegen. Description and capacity of a deep pocket V-box hydraulic classifier, of the Meinecke hydraulic classifier both new and old form, and of the Meinecke concentric *spitzlutte*.
50. *Ass. Eng. Soc.*, Vol. XVII., (1896), p. 73. L. Wagoner. Mathematical discussion of the velocity of particles falling in water.
51. *Berg. u. Hütt. Jahrb.*, Vol. XXXI., (1883), p. 154. K. von Reytt. Enumeration of apparatus for classifying.
52. *Berg. u. Hütt. Zeit.*, Vol. XXXII., (1873), p. 21. Meinecke. Description of pointed box without hydraulic water, used at Clausthal.
53. *Ibid.*, Vol. XXXIII., (1874), p. 153. E. Ferraris. Mathematical discussion of the velocity of particles falling freely in water.
54. *Ibid.*, Vol. XL., (1881), p. 432. No author. Description of the Geyer slime settling apparatus.
55. *Ibid.*, Vol. XLV., (1886), p. 477. No author. Description of the siphon separator (*heberwäsche*) used at Mechernich with capacity, water used and results obtained.
56. *Ibid.*, Vol. LI., (1892), p. 188. No author. Description of the Bilharz *spitzlutte*.
57. *Ibid.*, Vol. LIII., (1894), p. 168. C. Blömeke. Dimensions of pointed boxes in Dornberg and Aurora mill.
58. *Bull. Soc. Ind. Min.*, Series III., Vol. VIII., (1894), p. 532. Ch. Mouchet. Description of pointed boxes used at the Vaucron mill.
59. *Cal. Bull.*, No. 6, (1895), p. 56. E. B. Preston. Description of the Gates hydraulic classifier.
60. *Cal. Rep.*, Vol. VI., Part II., (1886), p. 92. J. M. Adams. Description and capacity of a hydraulic classifier in the form of pointed boxes.
61. *Can. Min. Inst.*, Vol. I., Part I., p. 30. F. Hille. Description of Bilharz *spitzlutte* used in a gold mill.
62. *Can. Min. Rev.*, Vol. XVI., (1897), p. 308. Copy of paper by Mr. J. Williams in *S. Afr. Min. Jour.* on the use of burnt lime for settling slimes.
63. *Coll. Eng.*, Vol. XVII., (1897), p. 309. H. K. Landis. Illustration of the Yeatman hydraulic classifier.
64. *Ibid.*, pp. 433, 486. H. Van F. Furman. A general article giving description of *spitzkasten* or pointed box, principles of settling tanks, discussion of various forms of spigots and descriptions of the Fraser & Chalmers deep pocket classifier, the single cone classifier made by the Colorado Iron Works and the Carkeek classifier.
65. *Coll. Guard.*, Vol. LXVII., (1894), pp. 592, 755. Same as *A. I. M. E.*, Vol. XXIV., pp. 80, 339.
66. *Ibid.*, Vol. LXXIII., (1897), p. 822. No author. Description, dimensions, capacity and water used on the Wunderlich coal washer, which is a form of trough classifier.
67. *Ibid.*, Vol. LXXIV., (1897), p. 781. Same as *Zeit. B. H. u. S.*, Vol. XLV., p. 233.
68. *Comptes Rendus Soc. Ind. Min.*, (1896), pp. 113, 137. P. E. Maurice. Mathematical discussion of the motion of solid particles in a liquid.

69. *Engineering*, Vol. LVIII., (1894), p. 777. No author. Description of the Ferraris hydraulic classifier.
70. *Eng. & Min. Jour.*, Vol. XXII., (1876), p. 139. No author. Description of Wengler and Lowe's pointed boxes using hydraulic water with figures on capacity, water used, amount passed by each spigot, etc.
71. *Ibid.*, Vol. XXIII., (1877), pp. 314, 335. Same as *A. I. M. E.*, Vol. V., p. 593.
72. *Ibid.*, Vol. XXXI., (1881), p. 179. W. L. Austin. Description of the Boss tubular classifier used at the Harshaw mill.
73. *Ibid.*, Vol. XXXIII., (1882), p. 21. No author. Description and capacity of the Charleton hydraulic classifier.
74. *Ibid.*, Vol. XXXIV., (1882), p. 159. Abstract of *Zeit. B. H. u. S.*, Vol. XXX., p. 279.
75. *Ibid.*, Vol. XXXV., (1883), p. 176. Same as *A. I. M. E.*, Vol. XI., p. 321.
76. *Ibid.*, Vol. XXXVII., (1884), p. 236. No author. Description, capacity and method of running the Geyer slime settling apparatus.
77. *Ibid.*, Vol. XLIII., (1887), p. 8. No author. Description, capacity and advantages of the siphon classifier or *heberwäsche* used at Mechernich.
78. *Ibid.*, Vol. LVII., (1894), p. 153. Abstract of *A. I. M. E.*, Vol. XXIV., p. 409.
79. *Ibid.*, p. 464. No author. Description of the Bilharz improved Rittinger *spitzlutte*.
80. *Ibid.*, Vol. LIX., (1895), p. 199. Abstract from *Engineering*, Vol. LVIII., (1894), p. 777.
81. *Ibid.*, Vol. LXIV., (1897), p. 551. Abstract from *S. Afr. Min. Jour.* on the use of burnt lime for settling slimes.
82. *Freiberger Jahrb.*, (1894), p. 36. L. Seeman. Description of a classifier without hydraulic water in which the carrying current follows a helical path, rising gradually and discharging spigots at intervals.
83. *Inst. Civ. Eng.*, Vol. CXVI., (1894), pp. 22, 35. R. E. Commans. General article treating theory, runs, pointed boxes with hydraulic water, Richards-Coggin classifier, Büttgenbach's pointed boxes, Bilharz improved Rittinger *spitzlutte*, the Osterspey siphon separator (*heberwäsche*) used at Mechernich, pointed boxes without hydraulic water and settling tanks.
84. *Inst. Mech. Eng.*, (1873), p. 123. H. T. Ferguson. Note on runs in Cornwall for tin ore.
85. *Iron Age*, Vol. LIII., (1894), p. 458. No author. Description of the Robinson coal washer, which is a deep pocket, conical classifier with a mechanical stirring arrangement.
86. *Min. & Sci. Press*, Vol. LXVII., (1893), p. 83. No author. Illustration and capacity of Dodge's sizing box.
87. *Ibid.*, Vol. LXXIV., (1897), p. 234. Abstract of *A. I. M. E.*, Vol. XXVII., p. 249.
88. *Oest. Zeit.*, Vol. XXXVI., (1888), p. 168. L. Buchal. Description and dimensions of pointed boxes both with and without hydraulic water, used at Przibram, with quantities of pulp treated and water used, and sizing tests.
89. *Ibid.*, Vol. XXXVII., (1889), p. 456. No author. Description of a series of pointed boxes over which the water is confined so that instead of flowing horizontally, it flows up a slope.
90. *Ibid.*, Vol. XXXVIII., (1890), p. 213. O. Bilharz. Description of the Altenberg classifier and its advantages and disadvantages as compared to a Rittinger *spitzlutte*.
91. *Ibid.*, Vol. XXXIX., (1891), p. 589. J. Pirchl. Results obtained by use of Meinecke classifier and *spitzlutte*.
92. *Ibid.*, Vol. XLII., (1894), p. 421. E. Ferraris. Description of the Ferraris classifier.
93. *Ibid.*, Vol. XLV., (1897), p. 357. V. Waltl. Description, capacity and dimensions of the Wunderlich trough classifier for coal washing.
94. *Ibid.*, p. 622. Abstract of *Zeit. B. H. u. S.*, Vol. XLV., (1897), p. 233.
95. *Raymond's Rep.*, (1870), p. 707. W. P. Blake. Description of Huet & Geyler's settling cylinder, Hundt's settling tub and Rittinger's *setzrad*, in all of which stuff falls freely in a column of water and by the revolution of the machine is deposited by classes in radial compartments below. Double cone tubular classifiers and Rittinger's pointed boxes with hydraulic water are described.
96. *Ibid.*, (1873), pp. 427, 446. W. P. Ward. Hundt's settling tub, Rittinger's *setzrad*, Rittinger's pointed boxes both with and without hydraulic water, and double cone tubular classifier, are all described and some dimensions given. Mathematical discussion of the velocity of particles falling in water.
97. *S. Afr. Min. Jour.*, Vol. VII., (1898), p. 447. No author. Slime settling apparatus for the Windsor cyanide plant in the West Rand.
98. *Sch. Mines Quart.*, Vol. XIV., (1892-3), p. 343; Vol. XV., (1893-4), p. 17. Same as *Ann. des Mines*, Series VIII., Vol. XX., pp. 44, 52.
99. *Tech. Soc. Pac. Coast*, Vol. V., (1888), p. 32. L. Wagoner. Results of tests on the velocities of particles falling in liquids and mathematical discussion of the same.

100. *U. S. Geol. Survey Bull.*, No. 36, (1886). Carl Barus. Results of experiments on the rate of settling of very fine particles in liquids.
101. *Zeit. Berg. Hütt. u. Salinenwesen*, Vol. XXX., (1882), p. 279. Hochstrate. Description of a tubular classifier used in washing coal, with results obtained thereby.
102. *Ibid.*, Vol. XXXIV., (1886), p. 42. T. Gregorj. Description, dimensions and capacity of the Ferraris hydraulic classifier, with amounts of water and pulp discharged by spigots and overflow.
103. *Ibid.*, Vol. XXXVI., (1888), p. 245. No author. Description of pointed boxes used at Friedrichssegen, and of a trough classifier used at Lautenthal. Description and capacity of Büttgenbach's classifier which consists of a series of pointed boxes one above the other, over which the current flows successively from bottom to top.
104. *Ibid.*, Vol. XLII., (1894), p. 232. No author. Description of a tubular classifier with spigots at various heights.
105. *Ibid.*, p. 234. No author. Description, capacity, water used, and results obtained by a shallow pocket hydraulic classifier used for coal.
106. *Ibid.*, Vol. XLIII., (1895), p. 184. Dr. Schulz and Herr Zeuner. Description of an elaborate system of settling tanks and reservoirs used at Tarnowitz.
107. *Ibid.*, Vol. XLV., (1897), p. 233. No author. Description of a settling tank for coal with a filter pipe in the center for draining off the water.

CHAPTER XIII.

HAND PICKING.

FINAL SEPARATORS, which include hand picking, jigs, vanners, slime tables, magnetic separators, etc., are treated in Chapters XIII. to XVIII. inclusive.

§ 362. HAND PICKING is the process of separating into classes, by hand, ores that have already been broken. It is of service in many ways. It saves rich ore from being crushed and made into slimes. It saves the expense of dressing (and in some cases also of shipping) waste rock, and at the same time increases the virtual capacity of the mill. In this connection it is especially applicable to ores that occur in such narrow veins that considerable country rock has to be mined with them. The picking out of wood, rope ends, etc., is sometimes adopted to rid the following screens, spigot discharges, etc., of those troublesome stoppages that cause so much derangement of mill work. Picking is often advantageous as relieving the concentrating machines of some of their most difficult work, for example, blende may be picked from chalcopyrite, barite from blende, etc. In either of these cases the two minerals are so nearly equal in specific gravity that they cannot be separated by the concentrating machines. In like manner, two grades of concentrating ore may be made, one of which is easy and the other difficult to concentrate, or one of which has one mineral prominent, and the other another. In Mill 17, zinc ore is picked from lead ore, each going to its own department for concentration.

SLEDGING AND SPALLING.—When the large lumps of mine ore are broken by hammers weighing say 10 pounds or more, the operation is called *sledging,* whether the product is hand picked or not. When ore that has already been selected is broken down to 2- or 2½-inch cubes by two-hand long handled hammers weighing from 2 to 5 pounds, the operation is called *spalling,* whether or not the product is hand picked. It will be seen from Tables 264 and 265 that sledging or spalling accompanies hand picking on the picking floors of rock houses of Mills 5, 13, 14, 17, 46, 47 and 48.

COBBING consists in hand picking accompanied by breaking with a one-hand hammer weighing 2 to 4 pounds. As a rule, the ore should be already broken as small as 4 inches in diameter. The richer the valuable mineral, and the more easily and cleanly it cleaves from the waste, the stronger will be the argument for cobbing, since it produces cleaner products than machine work, and causes less loss by sliming. It will naturally produce cleaner products than spalling. Linkenbach says that a strong boy can cob 165 pounds (75 kilos) of ordinary sulphide ore per hour, making 6% of fines. At a mine in Saxony, cobbing set aside 25% of the material from further treatment.[16] Cobbing is used in Mill 27, but as a rule it is not found in the mills of this country.

HAND PICKING ACCOMPANIED BY SLEDGING.—In regions where labor is not too expensive, hand picking with sledging may be resorted to with great advantage, saving the expense of crushing and washing the richer ore, and avoiding the loss in slimes; and in regions where ore is rich and concentration by machines is unavailable, hand picking with sledging must be used. On the other hand, in localities where the price of labor is high, and mill work is available, the tendency is to abolish the sledge almost entirely, and to use large breakers, but

the advantage of hand picking may still be retained; while the ore is being fed to the bin, the rock breaker, the rolls or the stamps. This form of hand picking costs so little per ton of picked ore produced, and the yield can be so easily compared with the cost of getting it, that it is commending itself to mill men; for example, Mills 30, 31, 42, 44, 46 and 48.

General Considerations.—Some systematic method must be provided of bringing the materials to, and removing them from the pickers, so as to avoid wasting their time and energy.

The work of picking should be inspected to see that it is properly done.

The keener sight of boys makes them better pickers than men, but the latter are required for inspection and responsibility and for the heavy sledging and spalling. The spalling floor and the hand picking house should both be well lighted. If hand picking must be done at night, electric lights are to be preferred. The natural colors of the minerals show better by the light of the arc lamp than by other artificial lights. Picking by night, however, is undesirable and should not be resorted to if it can be avoided.

In most cases picking will be best done upon rock freshly rinsed with water. This brings out the colors of the minerals to the best advantage, and it also lays the dust. Cases often occur, however, where washing preparatory to picking is impracticable.

The fines are usually screened out before hand picking, and sometimes the coarser part is divided into two classes. The more nearly uniform the size of the ore particles, the easier is the work.

§ 363. Hand picking may be considered in the order of the places where it is done, namely, in the mine, at the rock house, or in the mill.

Picking in the Mine.—Under this heading may be included several different ideas, as follows:

Waste for Stowing.—The separation of easily distinguishable barren rock from ore, to save the cost of hoisting and to make filling for the mine, may be adopted, but it does not appear to be much favored in this country, probably on account of the losses of ore which occur, owing to poor light, limited space and the difficulty of inspection. In Mine 24, however, 25 to 50% of the rock broken is left in the mine as refuse. In Mine 12 a small amount of refuse, amounting to 30 tons a year from a daily product of 100 tons, is picked out and left in the mine. In Mine 93 a little limestone is picked out in the open cut. At Idria, Austria, where the dressing is wholly by hand, with 65,000 to 70,000 tons of quicksilver ore hoisted per year, 3,600 to 4,000 tons of waste rock are left in the mine by hand picking.[27]

Rich Ore for Economy.—Pure, soft ores that are easily recognizable, for example galena, may be selected in the mine, to minimize the losses due to attrition. This is done at Mines 26, 30, 31, 35, 54, 83 and 87. In Mine 31 this work yields about 2%, and in Mine 35 about 25% of smelting ore.

At Friedrichssegen, Rhenish Prussia, sloping gratings with 50-mm. square holes are placed in the ore chutes at all of the workings in the mine. As the ore passes over the gratings, clean galena, blende, siderite and copper ore are picked out. The system is made a success by the payment of small bonuses.[16] It is not uncommon, in Europe, for the miner to receive a slight premium for selected ore, but this premium is not so large that he is tempted to devote any of his time to spalling or true dressing to the neglect of mining.[8]

Block System.—The valuable and refuse minerals may be so distributed in a mine that a species of block system may be adopted, handling ores by blocks or masses, one whole stope being sent to the smelter, another to the mill. This method is adopted in Mines 38 and 42, and undoubtedly in many others.

For purposes of management, the ore from various shaft sinking, level driv-

ing or stoping operations may be hoisted and stored separately, en route to the mill process. By this method, their separate valuation by mill run approves or condemns each section of workings in the ordinary routine of business. Mines and Mills 59, 67 and 77 are run upon this principle. Mill 59 is provided with a large receiving floor. Three tracks are brought in, 11 feet above the floor, on trestles. Under each track are four compartments or dumping heaps, making 12 heaps in all. Each heap is 12 feet lengthwise of the track and 20 feet wide. Vertical plank partitions are placed across under the tracks between the heaps, and aisles are left 6 feet wide between the heaps for wheeling any particular parcel of ore from its heap to its stamp battery, thus enabling the mill run to make a complete test of the value of the stope or winze from which the parcel of ore came. Mill 67 uses five bins in a block 38 feet long, 16 feet wide, 15 feet deep in front, the bottom sloping up 45° from the front. The five bins have a total capacity of 225 tons. The contents of each bin is sent by itself to the stamps; and a complete record of the yield is balanced against the cost of mining, and tells the profit or loss from the treatment. Mill 77 has, behind each stamp battery, a bin 9 feet long, 7 feet wide, 10 feet deep. The mill treats custom ores, each lot of which is dumped into a particular bin, and the ore from each bin is treated separately throughout, and complete returns made thereof. This illustrates the method adopted in custom mills.

Summary.—In the mines visited, the author finds mine sorting carried on as follows: In Mines 24, 25 and 57 the ore is sorted into concentrating ore and waste; in Mines 26, 39 and 87, the ore is sorted into smelting ore, concentrating ore and waste; in Mines 1, 30, 31, 35, 40, 41, 54 and 83 the ore is sorted into smelting ore and concentrating ore; in the mine supplying Mills 68 and 82, the ore is sorted into silver ore and gold ore; and in Mine 12, the ore is sorted approximately into pieces larger and pieces smaller than 6-inch cube to be treated separately in the mill. In all of these cases the different products are hoisted separately, except as otherwise indicated. The author has no data upon the remaining mines, as to whether or not any sorting is done below ground.

§ 364. Hand Picking in the Rock House.—The rock house is either an addition to the shaft house, or a separate building near by. It generally has a track for bringing the ore to the pickers; a grizzly and bin for screening out and receiving the fines; a picking floor or table for sorting the oversize of the grizzly; and tracks for removing the waste, the lump ore and the fines. The material subjected to picking is the oversize of the grizzly; and this work is done either on large spalling floors with the aid of sledges, drop hammers, etc.; on picking tables; on the grizzlies; or on both grizzlies and floor.

Table 264 shows that picking yields shipping ore and concentrating ore in 1 rock house; shipping ore and waste in 2 rock houses; concentrating ore and waste in 4 rock houses; shipping ore, concentrating ore and waste in 5 rock houses. The waste from the rock houses of Mills 65, 73 and 74 consists simply of wood chips; and as a certain amount of gold adheres to these, they are burned and the ashes worked up to extract the gold. Some wood is also picked out from the stamp mortars of these mills and treated in the same way. In the rock house of Mill 55, 10 to 15% of rich smelting ore is picked from the chutes as the ore is loaded on cars. In rock houses of Mills 46 and 47 the quantity of native copper picked out is, respectively, about 8% and 30% of the total copper product, and the quantity of waste rejected is, respectively, about 12% and 10% of the rock hoisted. In the rock house of Mill 48 about 7% of the rock hoisted is rejected by hand picking.

At most of the gold mines on the Rand, in South Africa, where the "reef" is often so narrow as to require the mining of a good deal of waste rock, considerable attention is given to removing barren quartzite from the ore as it passes

through the rock houses. At some of the mines the ore is screened into three sizes, the fines going direct to the mill, while the two coarser sizes are hand picked. The good ore remaining in the coarsest size is then crushed and sent to a grizzly, the oversize of which is again hand picked. In some cases as much

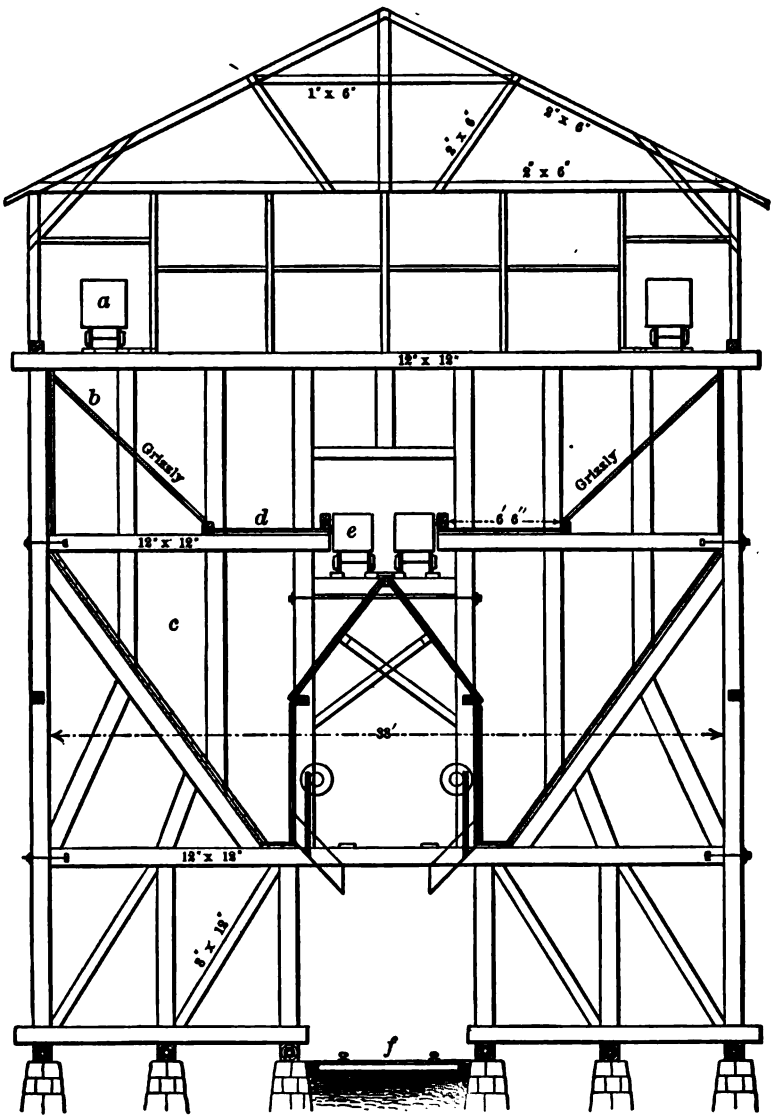

FIG. 291.—END ELEVATION OF ROCK HOUSE OF MILL 40.

as 30% or even 40 or 50% of the rock hoisted is removed by hand picking, though Webb and Yeatman[21] estimate that the average for the district is probably from 12 to 16%.

The rock house of Mill 40 is shown in Fig. 291, where *a* is the receiving car, *b* the grizzly, *c* the bin for fines, *d* the picking floor, *e* the car for removing waste

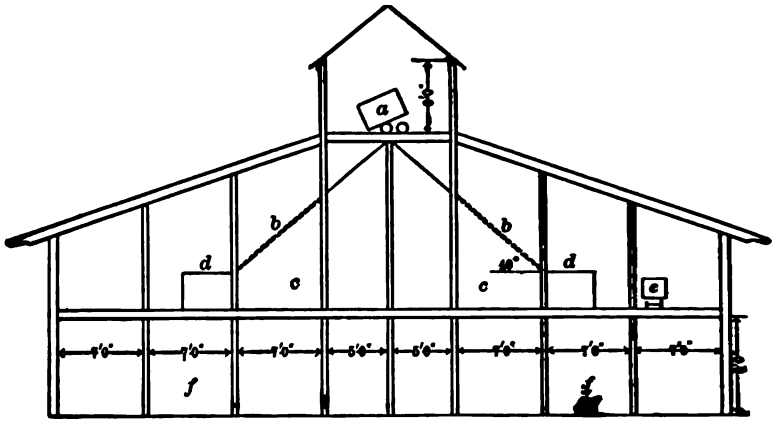

FIG. 292.—SIDE ELEVATION OF A CRIPPLE CREEK ROCK HOUSE.

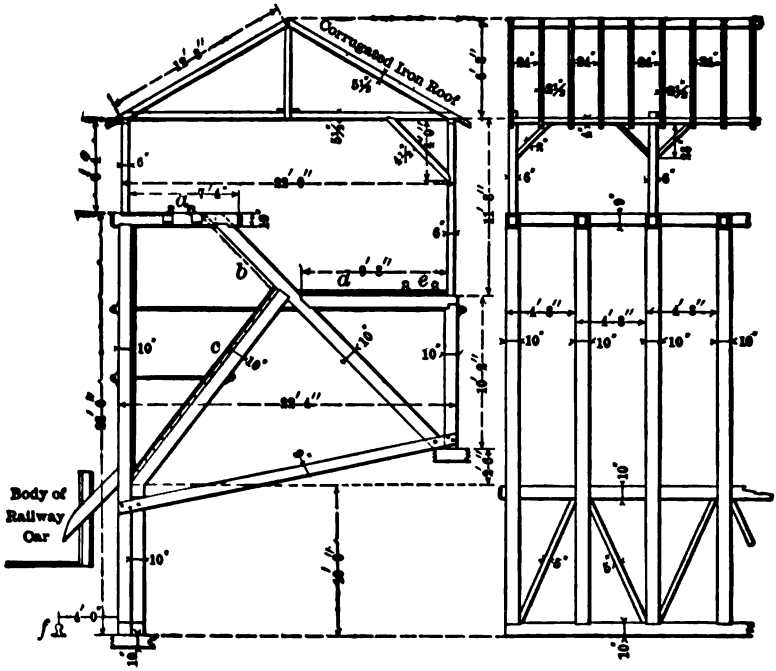

FIG. 293*a*.—END ELEVATION OF COWENHOVEN TUNNEL CO.'S ROCK HOUSE AT ASPEN, COLORADO.

FIG. 293*b*.—SIDE ELEVATION.

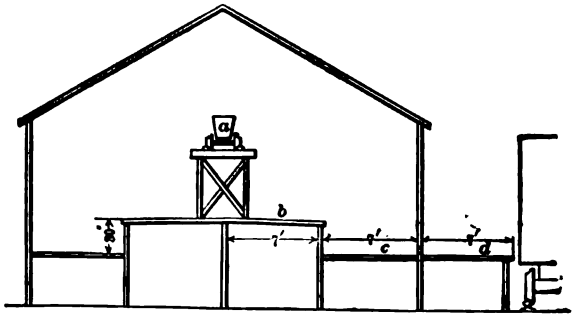

FIG. 294.—CROSS SECTION SKETCH OF GUSTON ROCK HOUSE, GUSTON, COLORADO.

or lump ore, and *f* the track for removing the fines. A section of a Cripple Creek rock house is shown in Fig. 292. The receiving car *a* has been turned 90° from the direction of the track on which it comes in, *b* is the grizzly, *c* the bin for fines, *d* the picking table, *e* the car for removing lump ore or waste, and *f* the bins for the various grades of lump ore. The rock house of the Cowenhoven Tunnel Co., of Aspen, Colorado, is shown in Figs. 293*a* and 293*b*. *a* is the receiving track, *b* the grizzly, *c* the bin for fines, *d* the picking floor, *e* the track for shipping waste, and *f* the track for shipping fines. These last two designs are by D. W. Brunton. The Guston mine rock house, of Guston, Colorado, shown in Fig. 294, is 30×100 feet. *a* is the receiving car, *b* the picking table, *c* the working floor for barrows, and *d* an outside platform for wheeling waste to the dump and ore to the cars. The contour of the ground is unfavorable to the shipping of ore from both sides, which the design contemplated.

A great variety of designs is used. The rock houses at the Lake Superior copper mines are capable of handling very large quantities of ore.

TABLE 264.—HAND PICKING IN ROCK HOUSES.

Mill No.	Sizes Picked. Inches.	Area of Floor or Table.	With or without Spalling or Cobbing	Quality of Products.	Destination of Products.
12	(*a*) 2	Floor about 18x18 ft	With spalling....	1 Pyrite.....	To acid works.
				2 Pyrite and chalcopyrite	To copper works.
				3 Ditto with enargite.....	To copper electrolytic process.
				4 Pure chalcopyrite and quartz.	Flux ore for refinery.
				5 Arsenopyrite.....	Dumped.
				6 Schist.....	To waste dump.
13	¾-2	Table, 12 ft.x3 feet 1 inch.	Without	1 Pyrite and chalcopyrite	To copper works.
				2 Schist.....	To dump.
14	(*a*) 2½	Spacious	With spalling....	1 Clean ore.....	To acid works and copper smelter.
				2 Spalls	To grizzly, ⅝ inch.
				3 Waste.....	.....
14	¾-2½ ⅝- ¾	Table, 12x3 feet.. " " "	Without.....	1 Clean ore.....	To acid works and copper smelter.
				2 Waste.....	To dump.
40	(*a*) 1½	Two floors, 60x6 ft.	Without.....	1 Chalcopyrite, bornite and enargite.	To copper smelter.
				2 Ditto, with blende.....	To copper smelter.
				3 Concentrating ore.....	To mill.
				4 Waste.....	To dump.
44	(*a*) 3½	On grizzly, 14 ft.x8 ft. 3½ in.	Without.....	1 Nuggets or barrel work	To smelter.
	(*a*) 3½	On grizzly, 7 ft. x4 ft. 3½ in.		2 Mill rock.....	To breaker.
				3 Waste.....	For making land.
46	(*a*) 3¼	Floor, 70x40 feet...	With sledging...	1 Mass copper, large lumps.	To drop hammer.
				2 Lump rock	To two sizes of breaker.
				3 Fine stuff.....	To mill bin.
				4 Waste	To dump.
47	(*a*) 2¾	Floor, 58x38 feet...	With sledging...	1 Large lumps and mass copper.	To drop hammer.
				2 Small mass copper	To steam hammer.
				3 Lump rock	To two sizes of breaker.
				4 Waste.....	To dump, mostly fit for building.
48	(*a*) 4	Floor, 40x30 feet...	With sledging...	1 Nuggets or barrel work	To smelter.
				2 Large pieces.....	To drop hammer.
				3 Lump rock	To two sizes of breaker.
				4 Waste.....	To dump.
48	3-4	Grizzly, 6x5 feet...	Without	1 Concentrating rock....	To mill bin.
				2 Waste	To dump.
55	.....	Chute (?).....	Without.....	1 High-grade ore	To smelter.
				2 Concentrating ore.....	To mill.
63 73 74	(*a*) 1½	On grizzlies, 11x- ft	Without.....	1 Wood chips.....	Burned for gold.
				2 Concentrating ore.....	To breaker.

(*a*) Run of mine, with ore finer than this size screened out.

§ 365. HAND PICKING IN THE MILL is done on chutes, grizzlies, tables or floors. The practice is shown in Table 265, from which we see that picking yields smelting ore and concentrating ore in 8 mills; smelting ore and waste in 5 mills; concentrating ore and waste in 4 mills; and smelting ore, concentrating ore and waste in 4 mills. In 4 cases the waste consists simply of wood chips, etc.,

TABLE 265.—HAND PICKING IN THE MILLS.

Mill No.	Sizes Picked. Inches.	Area of Floor or Table.	With or without Spalling or Cobbing.	Quality of Products.	Destination of Products.
1	.....	On the ground.....	Without	1 Purple copper.....	To smelter.
				2 Chalcopyrite	To smelter.
				3 Waste.....	To dump.
2	(a) 1¼	On boards on the ground.	Without.....	1 Lead ore.....	To smelter.
				2 Zinc ore.....	To smelter.
				3 Waste	To dump.
4	(a) 1	Table, 3x2½ ft...	Without.....	1 Clean limonite.....	To furnace.
4	¾ to ⅛	Table		2 Waste.....	To dump.
4	¼ in. to 16 mesh.	Table.....			
5	(a) 3½	Grizzly (c).....	With spalling..	1 Lump ore.....	To furnaces.
				2 Waste.....	Broken to pass through grizzly.
12	(a) 6	Floor, 20x10 feet...	Without (?)....	1 Concentrating ore.....	To breaker.
				2 Waste.....	To dump.
12	1½ to 6	Table, 25x3 feet....	Without (?)....	1 Smelting ore, 1st class.	To furnaces for spelter.
				2 " " 2d class.	To oxide furnaces.
				3 Concentrating ore.....	To breakers.
				4 Waste.....	To dump.
12	⅝ to 1½	Table, 25x3 feet....	Without (?)....	1 Rich ore	To furnaces for spelter.
				2 Waste.....	To dump.
17	Run of mine	Floor, spacious....	With spalling..	1 Clean lead ore.....	To furnaces.
				2 Concentrating lead ore.	To lead mill.
				3 Clean zinc ore.....	To furnaces.
				4 Concentrating zinc ore.	To zinc mill.
19	Run of mine	Equilateral triangle, 6 ft. side.	.....	1 Clean galena.....	To smelter.
				2 Clean blende.....	Stored.
				3 Concentrating ore.....	To breaker.
27	Run of mine	Table, 7x4 feet.....	With cobbing..	1 Gray copper	To smelter.
				2 Concentrating ore.....	To breaker.
30	(b) 2½	Picking chute.....	Without.....	1 Galena.....	To smelter.
				2 Concentrating ore.....	To rolls.
31	Run of mine	Picking chute.....	Without	1 Rich ore.....	To smelter.
				2 Concentrating ore.....	To breaker.
37	Run of mine	Floor	(?)	1 Rich ore.....	To smelter.
				2 Concentrating ore.....	To breaker.
42	(a) 1	Vibrating grizzly, 24x30 inches	Without.....	1 Rich ore.....	To smelter.
				2 Concentrating ore.....	To steam stamps.
44	(b) 3½	Picking chute (d)..	Without	1 Copper nuggets or barrel work.	To smelter.
				2 Mass copper.....	To stamps just before clean up.
				3 Concentrating rock....	To stamps.
				4 Wood chips.....	Waste.
46	(b) 3¼	Picking chute (e)..	Without. Water with rock.	1 Mass copper.....	To stamps just before clean up.
				2 Concentrating rock....	To stamps.
				3 Wood chips, etc.....	Waste.
47	(b) 3	Picking chute, 24° slope.	Without	1 Concentrating rock....	To stamps.
				2 Wood.....	To waste.
47	1 to 2	Grizzly, 15x15 inches	Without	1 Copper.....	To smelter.
				2 Rock.....	Returned to steam stamp.
48	(b) 4	Picking chute, 31° 30′ slope.	Water fed with rock.	1 Nuggets or barrel work	To smelter.
				2 Concentrating rock....	To stamps.
				3 Wood chips, etc.....	To waste.
82	(a) 1½	On grizzly, 12x6 ft.	Without	1 Rich ore.....	To smelter.
				2 Concentrating ore.....	To breaker.
92	1½ to 4	Rubber belt, 25 ft. long, 36 in. wide.	Without	1 Concentrating ore.....	To breaker.
				2 Waste	To dump.

(a) Run of mine, with ore finer than this size screened out. (b) Run of mine, with ore coarser than this size screened out. (c) 10 feet 3 inches long by 12 feet wide. (d) About 10 feet long, 4 feet wide at top, 1 foot wide at bottom. (e) 6 feet 2 inches long, 4 feet 6 inches wide at top, 7½ inches wide at bottom; slope 5 inches to 1 foot, or 22° 37′.

which would be troublesome in the mill. In some of the mills two grades of concentrating ore or of smelting ore are produced. In addition to the cases shown in Table 265, native silver is separated from native copper in Mills 44, 46, 47 and 48. The material treated is the washed residue from the steam stamp mortars larger than $\frac{3}{16}$ inch, and skimmings from the No. 1 roughing jigs between $\frac{3}{16}$ and $\frac{9}{100}$ inch. At Mill 27 about 10% of all the concentrates is obtained by hand picking. In Europe, where more attention is given to hand picking than in this country, a large number of products is sometimes produced: for example, at Freiberg fifteen different products are made.[24]

§ 366. Size of Ore.—An idea of the sizes that are hand picked in American and European mills may be obtained from Tables 264, 265 and 266. The over-

size of the coarse grizzlies often contains lumps 9 inches in diameter or even larger. There is very little picking of sizes smaller than ½ inch. It will be seen, however, that there is a great variation in the lower limit of size below which hand picking ceases; and it would appear impossible to assign a limit above which picking may be profitable, and below which it will not be so. Each manager must decide this for his own mill. It will be further noticed that in a number of instances the picking of all sizes mixed is resorted to with profit. However, while this is proper in some cases, it is not in general to be recommended, since the eye and mind cannot easily follow large and small pieces at the same time, and the result is therefore less complete.

TABLE 266.—SIZES OF ORE HAND PICKED IN EUROPEAN MILLS.

Place.	Sizes Picked. Inches.
Allevard, Isere, France[15]	1.2 (a).
Clausthal, Harz Mountains[16a]	1.25 to 2.4; 0.7 to 1.25; 0.5 to 0.7.
Friedrichssegen, Rhenish Prussia[16]	1.4 (a); 1.4 to 2; 1.2 to 1.4; 1 to 1.4; 0.8 to 1.2; 0.5 to 0.8.
Laurenburg-on-the-Lahn[16b]	2.5 (a); 1.4 to 2.5; 0.6 to 1.4.
Lauthenthal, Harz Mountains[16a]	3.2 (a); 1.25 to 3.2; 0.5 to 1.25.
Maiern, Austria[38]	1.2 to 2; 1 to 1.2; 0.6 to 1.8.
Przibram, Bohemia[7]	2. 4 to 3.2; 1.25 to 2.4; 0.85 to 1.25; 0.6 to 0.85.
Ramsbeck, Westphalia[17] (Dörnberg and Aurora Works).	1.2 (a); 0.8 to 2.4; 0.5 to 0.8.
Schulenberg, Harz Mountains[16a]	2.4 (a); 0.8 to 2.4.
Weiss, Rhenish Prussia[16]	2 (a); 1.2 to 2; 0.8 to 1.2; 0.6 to 0.8.

(a) Run of mine with sizes finer than this screened out.

§ 367. THE COST OF HAND PICKING depends on the percentage that is picked out, the size of the ore, the ease with which the different minerals can be distinguished, the mechanical facilities and the price of labor. The labor required is generally the cheapest about the mill. Hatch and Chalmers[6] state that the average cost of hand picking on the Rand in 1895 was about 14 cents per ton picked out, while figures quoted by them show that the average cost of stamp milling in 11 mills was $1.10 per ton, and the average cost of cyaniding the mill tailings in 9 mills was $1.24 per ton; showing that, by picking out the waste instead of sending it all to the mills, there was an average saving of about $2.20 per ton of waste picked out, beside the cost of transporting from the rock houses to the mills. The native laborers employed for this work receive only $0.50 per day, but there would be a large saving even if the price of white labor was paid ($3.00 to $3.50 a day). As an illustration of the relative value of the waste, the annual report of the Geldenhuis Deep mine for 1897 states that the average assay of the hand picked waste (amounting to 9.7% of the ore mined) was $1.16 per ton, while the assay of the final tailings after passing through the stamp mill and cyanide works, was $1.08 per ton. At the Ferreira mine, the hand picked waste (amounting to 31.9% of the ore mined) assayed less than the final tailings from the cyanide plant.[6]

Table 267 gives estimated costs of picking galena of different sizes when the ore passes automatically in front of the pickers. Where the larger sizes are picked on floors instead of on belts or revolving tables, the quantities stated in the table are probably too high and the cost too low; and, moreover, the picker would probably become exhausted when picking 6-inch cubes at the rate indicated. The table, however, has its value as showing how rapidly the quantity diminishes, and the cost per ton increases, as the size of the individual particle diminishes. Estimates for other minerals can easily be made: for example, in picking quartz the quantity would be $\frac{2.6}{7.5}$ times that in the table for any size, and the cost per ton would be $\frac{7.5}{2.6}$ times that given in the table, 2.6 and 7.5 being the specific gravities of quartz and galena respectively.

TABLE 267.—ESTIMATED COST OF HAND PICKING GALENA.

	Weight of a Single Lump of Galena.	Seconds Required to Pick one Lump	Weight of Galena Picked in Ten Hours.	Cost per Ton Picked Out. Wages at $1.00 for Ten Hours.
	Pounds.		Pounds.	
6—inch cubes.....	58.46	42	50,100	$0.040
5 " "	33.83	24	50,750	0.039
4 " "	17.331	12	51,970	0.038
3 " "	7.308	5	52,620	0.038
2 " "	2.165	3	25,980	0.077
1½ " "	0.9134	2	16,442	0.122
1 " "	0.27061	1	9,743	0.205
¾ " "	0.11421	1	4,112	0.486
½ " "	0.03383	1	1,218	1.642

§ 368. PICKING TABLES.—There are five classes of picking tables in use: (1) stationary horizontal tables; (2) stationary sloping chutes; (3) shaking tables; (4) belt, rope or plate conveyors; and (5) revolving circular tables. Stationary, horizontal tables may be fed automatically or by barrow, but they are discharged by hand. Sloping tables or chutes, are fed automatically and may be discharged automatically. Tables of the three remaining classes are fed and discharged automatically.

STATIONARY TABLES, on which the ore rests, are horizontal or nearly so. They are generally long and narrow, with a tank at one side for cleaning the ore before it is shoveled to the table. The rinsing is sometimes done on the table with a hose. They have a track for barrow or car for bringing the ore, and have means for disposing of the various products by boxes, hoppers or chutes.

The table used at Mine 13 (Fig. 295) is 12 feet long, 3 feet 1 inch wide, with

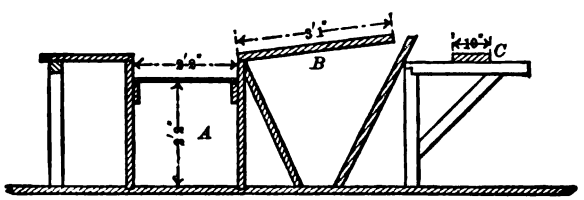

FIG. 295.—CROSS SECTION OF WASHING BOX AND PICKING TABLE AT MILL 13.

a tank, *A*, on one side, which has, an inch or two below the surface of the water, a horizontal plate perforated with ¼-inch holes, on which the ore is dumped and rinsed, and from which it is shoveled to the table, *B*, for the pickers. The table slopes toward the tank 1½ inches per foot (7° 8′) for drainage. Four pickers sit in a row upon the seat, *C*, which consists of a plank supported by brackets. They pick poor rock into wheelbarrows behind them, and scrape the good ore into the hopper beneath, which discharges by a gate into a car on the floor below. It would be easier for the pickers to deliver the ore forward rather than backward, but no convenient way of doing this seems to have been found. In cold weather the pickers are warmed by exhaust steam which passes through pipes over the table, thence beneath the seat, and finally through the washing tank.

Mine 14 uses a table somewhat similar to the above, 12 feet long, 3 feet wide, 2½ feet high, at the side of which is a washing tank 5 feet long, 7 feet wide, 1 foot deep. The pickers sort the good ore into boxes and scrape the waste into a hopper beneath the table.

At Mill 12, the picking tables are 25 feet long, 3 feet wide, with the picking surface made of old trommel screens, to drain the ore. Alongside of each is a rinsing table, 20 feet long, 2 feet wide, sloping 1 inch per foot, made up of five cast-iron plates, 1 inch thick, perforated with round holes, ¾ inch in diameter for No. 1 table and ⅜ inch for No. 2. Under the plate, to catch the water and fines, is a tank extending beyond the plate, leaving an open space

from which water may be dipped by bucket. The ore is shoveled on the rinsing plate and washed either with bucket or hose, according to whether the tank is full of water or not. The ore is then shoveled to the picking table. Boys pick the three grades of good ore into boxes, and scrape the waste to the floor, from which it is later wheeled to the dump. The fines from the tank go to the jigs.

At Mill 27, a table 7 feet long, 4 feet wide, sloping 3° 50′ from end to end, is used. On each side is a ledge 8 inches wide and 3 inches high, on which are old Blake breaker toggles, which serve as pounding blocks for cobbing. The run of mine is raked along the central trough, which is 32 inches wide, while men stand at the sides and cob the ore. It yields smelting ore to a bin and concentrating ore to a breaker.

Mill 19 has a fixed picking table in the form of an equilateral triangle, 6 feet on a side.

Picking Chutes.—In Mill 30 there are 18 picking chutes, each 4 feet 6 inches long, 32 inches wide, 26 inches deep, sloping 39°, with checks in them to control the flow of ore, and seats on which the pickers sit over the chutes. The whole contents of a large store bin, with run of mine which has been through a Blake breaker, passes automatically before the pickers, who pick out clean smelting ore and toss it into a bin. The rest of the ore goes automatically, by a plate conveyor and elevator, to the rolls. The men are paid so much per ton on the product picked, provided it assays up to the standard. This is a most simple device for inviting the picker to get high quantity while holding him to good quality. About 2½% of the concentrating ore is thus picked out. In Mill 31, about 1⅝% of the concentrating ore is picked out as it passes from bin to breaker.

Mills 44, 46, 47 and 48 all have picking chutes 6 to 10 feet long, sloping 20° to 30°, narrowing toward the lower end, on which the rock is easily pushed, with the aid of wetting, from the bins to each steam stamp. Rich "barrel" copper is picked out to be sent to the furnace; and a second grade of rich copper rock is saved, to be fed to the stamp during the last half hour before changing a shoe. Chips of wood, rope ends, etc. are also picked out, while the rest goes direct to the stamp.

An automatic slate picker, consisting of a chute with a specially designed slotted bottom, is used for cleaning coal. It operates by virtue of the flat shape of the slate.[14]

§ 369. Shaking Tables.—Bartlett's picking table is an inclined, flat table, divided into a number of conveying troughs by longitudinal partitions, and receiving a lengthwise shaking motion from eccentrics. The table is inclined about 1 inch in 9 inches, or sufficiently to cause the ore to move down the slope. A screen at the upper end, with 0.25-inch holes and a spray pipe for wash water, removes the fines; a wide central conveying trough brings the rock; and three narrow troughs on each side receive three qualities of picked material. These troughs extend from the screen at the upper end, the whole length of the table, and deliver the various products into separate bins. The table is 18 feet long, 4 feet 4 inches wide, and moves back and forth on rollers, 200 times a minute, a distance of 2 inches. The table treats 5 to 10 tons per hour, and, with breaker and elevator, the cost of treatment was 15 cents per ton.[22]

Belt, Rope and Plate Conveyors are endless belts passing over two drums, with means of taking up the slack and of supporting the two horizontal parts of the belt. The belts are made of rubber, of steel plates or pans, and sometimes of rope matting, of wire cloth, or of wire matting. Pickers can stand on each side and pick into either boxes or barrows, or into a central trough upon the belt. For detailed description see § 627.

In Mill 92, a chain plate conveyor, 25 feet long between centers of drums,

and 35 inches wide, was formerly used. It was divided longitudinally into three parts by two iron fins on each plate. The center part was 10 inches wide, each side part 12 inches wide. It traveled 32 feet per minute. The ore was fed to the two side parts, and the waste picked into the center part by one or two men. The two side parts delivered to a double-jaw breaker and the center by a chute to the waste dump. This plate conveyor has been replaced by a rubber belt, from which waste is now picked off.

A plate conveyor has been used for coal, of such form that the waste can be picked from the upper part of the belt and put upon the lower part. Each part delivers its product automatically.[9]

A Revolving Circular Table has an annular picking surface, upon which the ore is fed from a chute and from which, after the circuit is completed, all that has not been picked off is automatically removed by a fixed diagonal scraper. Fig. 296 shows a table having an outer diameter of 11 feet 6 inches, with the picking surface, *d*, 26 inches wide. It is supported on nine horizontal arms, *c*, radiating from a central hub, *b*, which is keyed to the vertical shaft, *a*. These arms are supported mainly by the rods *f*. Around the inner margin is a raised border *e*, 5.3 inches high, which prevents ore being knocked off the inner edge. The table is driven by the worm gearing a_1. a_2; and requires only about 0.1 horse power.[7 and 13] The ore fed at *h* is rinsed with water from the pipe *k*. The pickers stand round the table and throw either waste or rich ore, as the case may be, into the hopper *l*; and what remains on the table is delivered into the chute, *m*, by a scraper not shown in the figure. Another method is for each boy to pick into a box by his side. Assays of the products obtained by the last picker will show whether the picking is carried too far or not far enough. The surface of the table is either wood or plate iron. When the latter is used it may be perforated to drain off the rinsing water, or the table may slope gently toward the edge so that the water will run off into a launder. The rinsing, however, is sometimes done before the ore reaches the table.

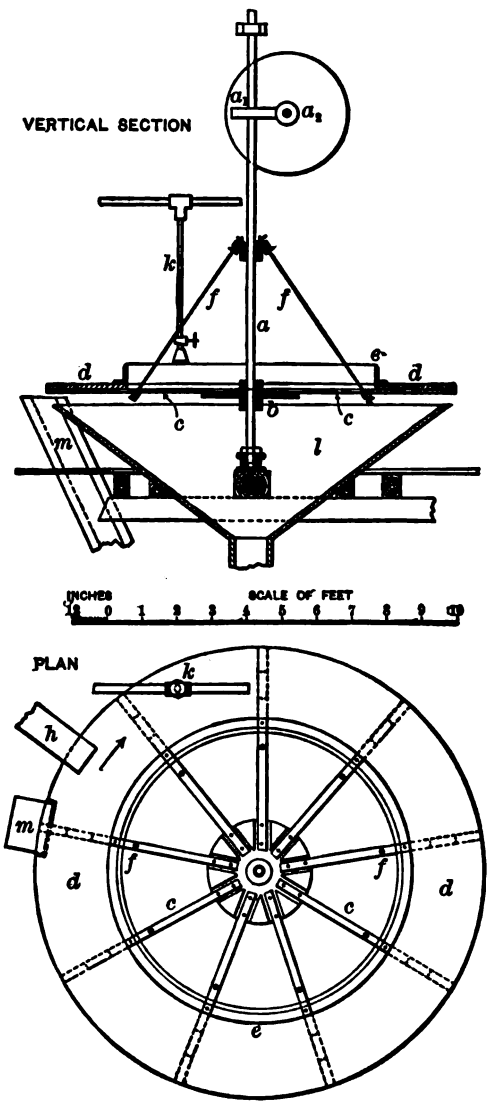

FIG. 296.—REVOLVING PICKING TABLE.

In the Rand district, South Africa, circular tables are used which consist of an annular picking surface 25 to 30 feet outside diameter and without any central construction, the table being supported on rollers beneath as shown in Fig. 297. It is driven by bevel gearing beneath. Pickers stand inside as well as outside of the table. This construction is used instead of that shown in Fig. 296 on account of the large diameter. Rollers fastened to the under side of the table and running on a fixed rail have been tried, but were given up because pieces of rock fell on the rail and caused trouble.

An intermittent motion has been applied to round tables, by means of a ratchet and pawl, because a uniform speed of revolution tends to make the pickers dizzy.[25]

THE SPEED of the moving tables, in practice, appears to vary from 15 to 40 feet per minute. The more pickers, or the less material to be picked out, the higher may the speed be.

§ 370. SUMMARY.—Of the plants visited by the author, two (13 and 14) have stationary picking tables in the rock houses; four (4, 12, 19 and 27) have stationary tables in the mills; seven (30, 31, 44, 46, 47, 48 and 55) have picking

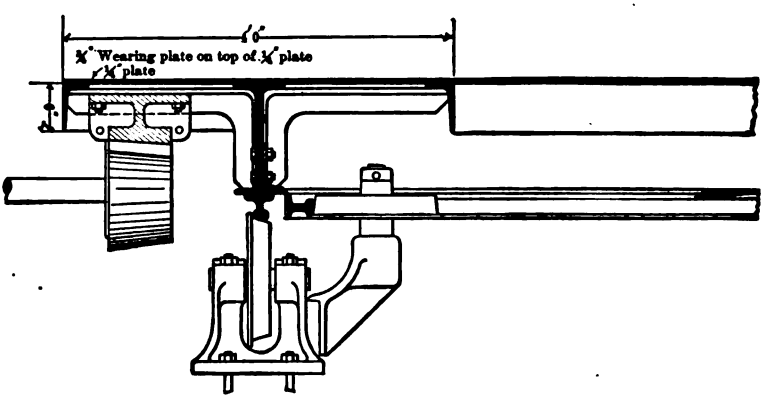

FIG. 297.—SPECIAL METHOD OF SUPPORTING A CIRCULAR REVOLVING PICKING TABLE.

chutes; seven (5, 44, 48, 65, 73, 74 and 82) pick on fixed grizzlies; one (42) picks on a vibrating grizzly, and one (92) picks on a rubber conveying belt. Of the 22 instances here noted, 14 pick on chutes or grizzlies, showing that it is more common to sacrifice height than to install the more complex conveying belts. In many of these instances the fall was necessary for other reasons, and these simple designs are found, in these cases, to serve as well as the moving tables. The chief argument in favor of tables is that they furnish picking facilities without loss of height.

COMPARISONS.—Moving tables are discharged automatically, while stationary horizontal tables must be discharged by hand. When more than one mineral is to be picked out, moving tables have the advantage that each picker selects only one grade, and therefore does better work; but, on the other hand, some managers prefer to have a single picker do all of the work on any batch of ore, because that fixes the responsibility, and in such cases fixed tables must be used. The fixed tables have the further advantage that they cost much less. Of the moving tables, the circular form shown in Fig. 296 is much simpler and cheaper to construct than the belts.

Bibliography of Hand Picking.

1. Bilharz, O., (1896), "Mech. Aufbereitung," Vol. I., p. 83. Discusses the arrangement of picking houses, and illustrates a systematic example.
2. Callon, J., (1886), "Mining," Vol. III., p. 16. Discusses the value, conditions and methods of hand picking.
3. Foster, C. LeN., (1894), "Ore and Stone Mining," p. 541. A short discussion of hand breaking and picking, and of picking tables.
4. Gaetzschmann, M. F., (1864), Vol. I., pp. 31-116. Very full discussion of the conditions, methods and details of hand breaking and picking; with examples of work and results at various plants. Illustrated.
5. Goupillière, Haton de la, (1885), "Exploitation des Mines," Vol. II., p. 680. Discusses hand picking in the mine and on the surface, and the principles of hand picking; also the advantages of different forms of picking tables.
6. Hatch & Chalmers, "Gold Mines of the Rand," pp. 151 and 261. Appliances, results, and cost of hand picking on the Rand.
7. Kirschner, L., (1898), "Erzaufbereitung," Part I., p. 26. Describes fixed and revolving picking tables.
8. Kunhardt, W. B., (1893), "Ore Dressing," pp. 3, 4, 6, 16. Short discussion of hand breaking and picking, with several examples from European practice.
9. Lamprecht, R., (1888), "Kohlenaufbereitung," pp. 6, 73. Describes revolving and belt tables. Illustrated.
10. Linkenbach, C., (1887), "Aufbereitung der Erze," p. 4. Describes and discusses hand breaking and picking in the mine and on the surface.
11. Rittinger, P. R. von., (1867), "Aufbereitungskunde," p. 7. Describes and discusses the methods and details of hand picking.

---

12. *Am. Inst. Min. Eng.*, Vol. VI., (1877), p. 299. Prof. Thomas Egleston gives the cost of hand picking at the Allouez Copper Mine, Lake Superior, for part of the year 1876.
13. *Ibid.*, Vol. IX., (1880), pp. 426, 446. Ellis Clark, Jr. Hand picking and picking tables at the Anna and Adalbert works, Przibram, Bohemia.
14. *Ibid.*, Vol. XIX., (1880), p. 427. Coxe's automatic slate picker for coal; p. 428, automatic *gap* slate picker for coal.
15. *Ibid.*, Vol. XXIV., (1894), p. 487. P. G. Lidner discusses the importance and value of hand picking and describes the practice at Åmmeberg, Sweden. Describes a three-deck revolving picking table.
16. *Ann. des Mines*, Series VIII., Vol. XX., (1891), pp. 7, 154, 176. Maurice Bellom shows from practice, the value of hand picking. Illustrated description of two cobbing houses.
16a. *Berg. u. Hütt.-Wesen des Oberharzes*, pp. 222, 227 and 228. Hand picking practice at Clausthal, Lauthenthal and Schulenberg.
16b. *Berg. u. Hütt.-Zeit.*, Vol. XLI., (1882), p. 141. Hand picking practice at Laurenburg.
17. *Ibid.*, Vol. LIII., (1894), p. 142. Conrad Blömeke describes the practice at Ramsbeck, Westphalia. Cobbing table, with grating to remove the fines.
18. *Bull. Soc. Ind. Min.*, Series III., Vol. VII., (1893), p. 466. G. Gromier describes the practice of hand picking spathic iron ore at Allevard. France.
19. *Cassier's Mag.*, Vol. XIV., (1898), p. 17. A. Cooper Key. Methods and results of hand picking on the Rand.
20. *Coll. Guard.*, Vol. LX., (1890), p. 128. C. M. Percy describes a picking belt made of steel plates carried on link chains.
21. *Eng. Mag.*, Vol. XV., (1898), p. 51. H. H. Webb and Pope Yeatman. Methods, results and cost of hand picking on the Rand.
22. *Eng. & Min. Jour.*, Vol. XLV., (1888), p. 228. F. L. Bartlett describes his jerking table and quotes results. Illustrated.
23. *Ibid.*, Vol. LIII., (1892), p. 665. John W. Meier describes and illustrates a revolving picking table; also a picking belt of wire screen, giving its capacity.
24. *Frieberg's Berg und Hüttenwesen, Frieberg*, (1893). E. W. Neubert gives the analyses of the 15 different products of hand picking at Freiberg, Saxony.
25. *Inst. Civ. Eng.*, Vol. CXVI., (1895), p. 5. R. E. Commans discusses the proper conditions for hand picking, the different forms of picking tables and the material for their surfaces; p. 95. A. G. Charleton describes novel features for revolving tables.
26. *Iron and Steel Inst.*, (1886), Part I., p. 289. A. H. Leach describes a picking belt of steel wire screen, and compares different materials for the picking surface.

27. *Min. Ind.*, Vol. IV., (1895), p. 531. R. Helmhacker describes the hand picking of quicksilver ore at Idria, Austria, both below and above ground, and quotes results.
28. *Oest. Zeit.*, Vol. XLI., (1893), p. 41. Joseph Billek describes picking in mine and mill at Maiern, Austria; also a fixed picking table used there.
29. *Ibid.*, Vol. XLII., (1894), p. 85. F. Rochelt describes a revolving cylindrical automatic slate picker for coal.
30. *S. Afr. Assoc. Eng. and Arch.*, Vol. III., (1895-97), pp. 138 and 151. Robert Dives. Advantages of hand picking, with examples from practice.
31. *Sch. Mines Quart.*, Vol. XIV., (1892), p. 219. Same as *Ann. des Mines*, Series VIII., Vol. XX., (1891), p. 7. See above.

CHAPTER XIV.

JIGS.

§ 371. PRINCIPLE, PURPOSE AND DEFINITIONS.—The work of hydraulic jigs depends, as a rule, upon the action of two currents of water, an upward and a downward, alternating with each other in quick succession, upon a bed of sand supported by a screen. Sands of two or more specific gravities, during the upward movement, called pulsion, arrange themselves according to the law of hindered settling (see § 466). During the downward movement, called suction, small grains wherever they are free to do so, move downward through the interstices between the large grains. In continuous jigs there is generally also a surface carrying current which serves to transport the lighter grains forward until they are discharged over the tail; sometimes this is done by a mechanical device.

The machines to be described under this heading are of two classes: jigs with *movable sieves,* which obtain the currents by pushing the sieve up and down in the water, either by hand or by power; and jigs with *fixed sieves* in which the currents of water are produced either by a plunger or by a stream of hydraulic water brought from a hydrant into the hutch, that is, the space beneath the sieve, or by both. The fixed sieve jigs are by far the more common. This hydraulic water acts to modify both pulsion and suction. Its increase adds to the former and diminishes the latter. It may be increased to an amount that will stop suction altogether; this, however, is more a theoretical idea than a practical method, on account of the large amount of water required to accomplish the result. If on the other hand, the hydraulic water is reduced to zero, then suction is increased to the maximum and suction equals pulsion.

The jigs have proved the most valuable concentrators yet devised for all the coarse products and they succeed also upon comparatively fine products, but have never been used to advantage for slimes. For this reason there is only one instance where they are used in gold stamp mills—in Mill 66, where they are reported to be run successfully. They can be used in the separation of two, three or four minerals, for example, quartz, blende, pyrite and galena. The coarse jigs can be used to save clean lump ore and to send the lumps of included grains to the crushers to be recrushed. The fine jigs can be used to yield pure heads, middlings for recrushing and washing, and tailings clean enough to throw away. The feed to jigs may be sized products, sorted products, or natural products. Jigs are, as a rule, final washers, that is to say, among the products which they turn out are one or two finished products—heads, or tailings, or both. Besides, they generally yield one unfinished product which may be either the heads, the middlings or the tailings, according to the method of running.

The products of a jig are designated as follows: (1) *Tailings,* which form the top layer and are either skimmed off the top intermittently by hand, or are carried over the tail continuously by the carrying current. (2) *Coarse con-*

centrates, which form the heavy or lower layer upon the sieve, and are composed of grains too coarse to go through. These may be removed intermittently by skimming, or continuously by devices called discharges. (3) *Hutch product, the "Hutch" or fine concentrates,* is the part which goes through the sieve. It is discharged intermittently by shoveling or by a gate, or continuously by a running spigot or by an elevator. A jig may be run to make any two or all three of the preceding products. Before taking up the details of jigs, the following definitions will be given of three terms as they will be used by the author: *The bottom bed* is the lower layer on the sieve, consisting of heavy mineral. *The top layer* is the upper layer, consisting mainly of gangue from which the heavy mineral is in the process of being separated. *The whole bed* is the phrase used when the above two are spoken of collectively.

MOVABLE SIEVE JIGS are divided into:

Movable sieve hand jigs.
Continuous movable sieve power jigs.
Intermittent movable sieve power jigs.

MOVABLE SIEVE HAND JIGS.

§ 372. This form of jig is used where concentration is being proved, or where the plant is small, or where, as in Missouri, the mines are pockety, and a large, elaborate mill will not pay. For these reasons, the hand jig will be considered in considerable detail.

The jig (see Figs. 298*a* to 300*c*) consists of a jig box *G* with a screen bottom

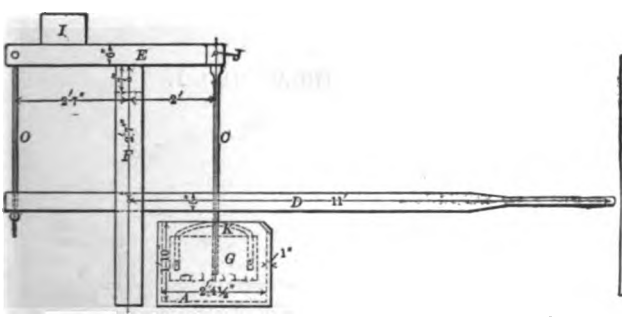

FIG. 298*a*.—SIDE VIEW OF HAND JIG AT MILL 13.

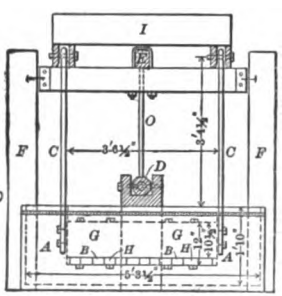

FIG. 298*c*.—END VIEW.

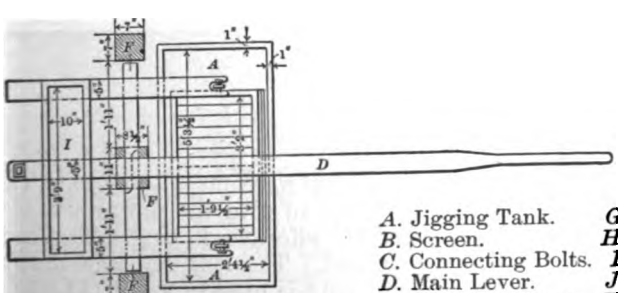

FIG. 298*b*.—PLAN.

A. Jigging Tank. *G*. Jigging Box.
B. Screen. *H*. Lattice.
C. Connecting Bolts. *I*. Counterweight Box.
D. Main Lever. *J*. Slip Joint.
E. Secondary Lever. *K*. Adjusting Arcs.
F. Supporting Posts. *O*. Auxiliary Connecting Rod.

B, two connecting rods *C*, a jigging lever *D*, and often a secondary lever *E*, two supporting posts *F*, and a jigging tank *A* filled with water. The jigging tank is made of wood. In Mill 2 it is also lined with plate-iron $\frac{1}{16}$ inch thick. The

jig box is a horizontal, rectangular frame of boards on edge. The screen is placed from 2 to 3 inches above the bottom to destroy the evil effect of side currents upon the whole bed. This space is also used for lattice supports for the screen if it is needed (see Fig. 298*c*.) When a grating is used as a sieve, however, no lattice is required (see Fig. 300*d*.)

The connecting rods *C* are arranged with adjusting arcs *K* to level the screen sidewise (see Fig. 299*a*.) The endwise leveling is done upon the posts. If out of level, the whole bed will work to one side or the other. The jigging lever is made in two ways. Either the pivot is between the point of application and delivery of power, or by using two levers the pivot is virtually at the end of the

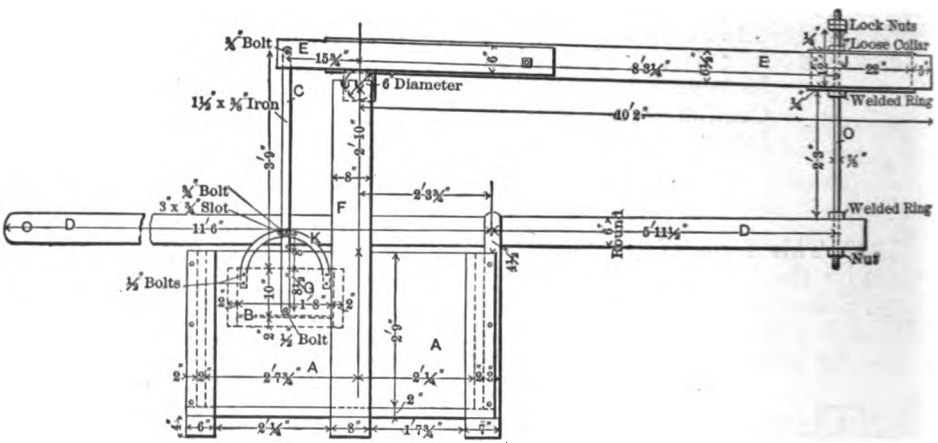

FIG. 299*a*.—ELEVATION OF HAND JIG AT MILL 1.

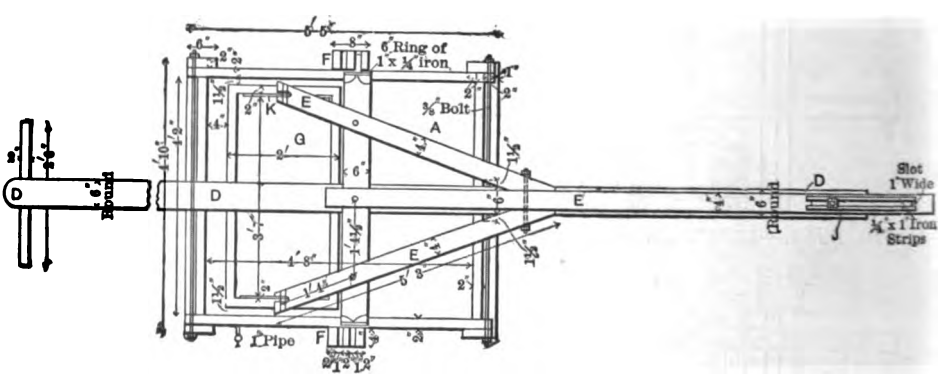

FIG. 299*b*.—PLAN.

lever. The first scheme (Fig. 300*a*) requires an upward push, the second (Figs. 298*a* and 299*a*) a downward push on the lever to give the downward strong impulse to the jig box, which is necessary for effective jigging. The second form appears to be easier to work than the first. The long leverage shown in Fig. 299*a* is probably due to the fact that this jig is used in a mill 11,000 feet above the sea. The jigging lever is best at the height of the hips, although sometimes used up over the head of the operator, and his labor is easier and more effective if he stands on a spring board.

To make the downward movement of the screen more sudden and therefore remove momentarily the screen support from under the ore bed more effectively,

a slip joint J is used, causing a downward blow to be imparted to the screen. In Figs. 298*a* and 300*a* this is a slot in the top of the connecting rods. In Fig. 299*a* a connecting rod O slides through the secondary lever E.

A counter weight may be required, as in Fig. 298*a*, to balance the jigging levers; this is not needed in Fig. 300*a* because of the weight of the loaded jig, and in Fig. 299*a* on account of the length of the secondary lever.

Rittinger speaks of hand jigs supported on spring timbers, with the jigging lever omitted, the jigging being done by hand directly over the jig. This can be done only in a small sized jig box.

§ 373. The method of working is to charge up the jig box with ore of proper size and depth. The coarser the ore, the deeper the whole bed may be, and the deeper the whole bed, the greater the output, but when too deep the separation by gravity is hindered. It is jigged with the proper amount of stroke and num-

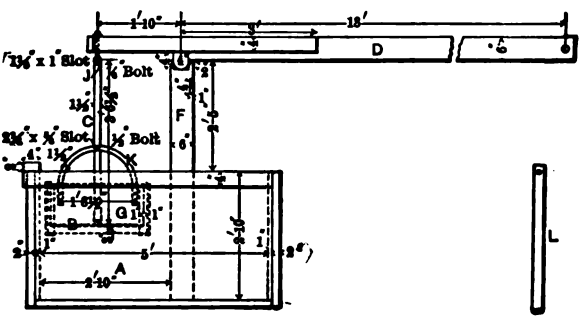

FIG. 300*a*.—SIDE ELEVATION OF HAND JIG AT MILL 2.

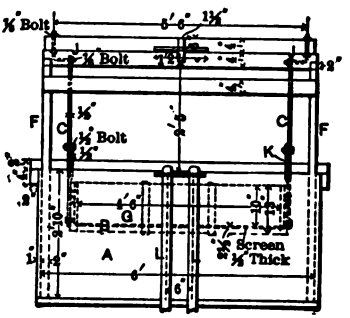

FIG. 300*c*.—END ELEVATION.

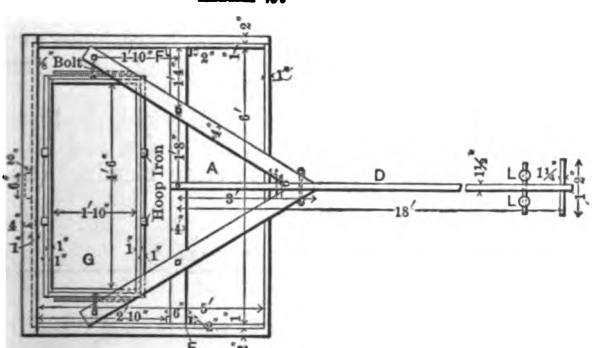

FIG. 300*b*.—PLAN.

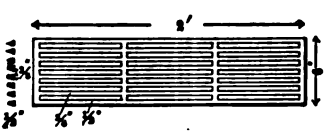

FIG. 300*d*.—ONE SECTION OF SCREEN.

ber of strokes per minute (the coarser the ore, the longer the stroke and the less the number per minute), giving a sharp downward motion to the screen to release the whole bed from it and so allow the ore particles to settle through the water under hindered settling conditions. The motion should be stronger with coarse than fine ore. The return movement brings the water back through the screen and uses suction to draw down the fine concentrates. Experience only will give exact data on the speed, the amount of throw and the number of strokes required for different ores, but a general idea of the adjustments used may be gained from Table 268.

When the jigging is finished, the lever is raised or lowered, as the case may be, and fastened to its hitching post L (see Figs. 300*a*-300*c*). The screen is thereby lifted out of water. The top layer is skimmed off with a short

handled hoe and thrown upon its heap. More ore is charged and the operation repeated until the concentrates have accumulated; then, after the top layer is removed, the middle portion is skimmed off, generally to be returned; the bottom layer, which has accumulated up to 2 or 4 inches deep, is skimmed off as concentrates. The hutch product which accumulates vertically beneath the screen, is shoveled out when sufficient material has accumulated, and the fine sludge which settles in the rear part of the jig tank, is taken out separately. Some of the tanks are made large on purpose to secure this fine product and in this case a partition coming up two-thirds of the way, will keep the coarse hutch out of the fine sludge. The coarse concentrates and hutch products are generally treated again on a finishing jig with finer screen and make concentrate and hutch ready to ship. The sludge may be rich enough to ship, or it may need buddle treatment to bring it up to the required standard. Where two minerals which belong to different markets, for example, galena and blende, are concentrated, they may be separated on a finishing jig.

Where recrushing of middlings is not to be resorted to, the jig, after several times having had tailings skimmed off from it and new ore charged, will be skimmed, yielding tailings or top layer, middlings to be returned, and coarse concentrates or bottom layer. The object of taking these middlings is in order that the concentrates may be freer from quartz and the tailings freer from ore. It also furnishes a layer on the sieve which prevents gangue from rattling down into the hutch while the next charge is being put on. After these middlings have been returned a few times, making an accumulation of them, the attendant will insensibly take off his tailings a little richer and his coarse concentrates a little poorer. This is his only way of disposing of the included grains for which his plant has no special provision.

A hydrant with water almost shut off, an overflow pipe and a little settling tank, may be provided for keeping the water at a constant level in the jig tank, or water may be added by a bucket from time to time. One or more holes are placed in the side of the jig tank, near the bottom, one below the other, for drawing off the water when it is desired to remove the sludge.

§ 374. Table 268 gives the practice in the mills. They all yield products as follows: (1) Top layer, which is waste except in Mill 3, No. 3 jig, and Mill 2 when re-treating hutch, in both of which the top layer is clean blende. (2)

TABLE 268.—HAND JIGS.

Abbreviations.—Ft.=feet; In.=inches; No.=number; scr.=screens.

Mill No.	Jig No.	Jig Box. Length	Jig Box. Width.	Jig Box. Depth.	Jig Tank. Length	Jig Tank. Width.	Jig Tank. Depth.	Material of Sieves.	Size of Sieve Hole.		Length of Long Lever Arm.	Length of Short Lever Arm.	Feed.
		Ft. In.	Ft. In.	Inches.	Ft. In.	Ft. In.	Ft. In.		In.	Mm.	Ft. In.	Ft. In.	
1	1	3-7	1-8	(a) 12	4-2	4-8	2-9	(b)	⅜	9.5	c15-11½	1-3¾	Undersize of scr.
2	1	4-6	1-10	(d) 13	5-0	6-0	2-10	(e)	(f) ⅝	9.5	18-0	1-10	From screen, 31.8 mm. to 0. (g)
3	1	4-0	2-0	10	5-0	6-0	4-0	(e)	⅝	15.9	.....	.....	From rolls, 12.1 mm. to 0. (h)
3	2	4-0	2-0	10	5-0	6-0	4-0	(e)	⅜	9.5	.....	.....	From No. 1 jig, 19.1 mm. to 0.
3	3												
13	....	3-2	1-9½	12	5-3½	2-4½	1-10	....	(i) ¼	(i)6.35	11-0	2-0	12.7 mm. to 0. (i)

(a) The sieve is 2 inches above the bottom. (b) A 2-mesh wire screen. (c) This is the virtual length of the lever. (d) The sieve is 3 inches above the bottom. (e) Cast-iron grating. (f) The grate bars are triangular, ½ inch deep, ⅝ inch wide, and have the apex downward. (g) In jigging this a bottom bed is used 6 inches deep for galena and 8 inches for blende. (h) The jig treats this stuff at the rate of 44.4 tons per 24 hours, using a stroke of the jig sieve of about 1 inch. (i) About.

The second layer which is returned to the same jig except in Mill 2 on zinc ore where it is blende. (3) The bottom layer or coarse concentrates, which are all finished except in the No. 1 and No. 2 jigs of Mill 3 where they are sent to

the following jig. (4) Hutch products, which in Mill 1 are re-treated on the same jig, using an 8-mesh sieve laid on top of the coarse sieve, and yield top layer which is waste, middle layer which is returned, bottom layer and hutch which are both shipped. In Mill 2, when treating galena ore, the hutch is a finished product, but on blende ore the hutch is re-jigged with a galena bottom bed and then yields only galena in the hutch, the blende remaining up in the coarse concentrates. For jigging coarse galena ore 60 throws per minute, for blende ore 100 per minute and for the blende hutch 120 per minute are used. In Mill 3, the hutches of No. 1 and No. 2 jigs each go to the next following jig; that of No. 3 jig is finished galena. The number of throws is 120 per minute and the time of jigging is four minutes.

In Mill 13 the jigs here described were formerly used, but have since given way to power jigs.

The labor required in all the mills is one man to a jig, which is high compared with machine jigs. The capacity given by Rittinger for his hand jig is 3 to 4 cubic feet of ore per hour for each square foot of sieve surface. Hand jigs cost about $20 each and require little repairs. They can be put together anywhere with a saw, axe, chisel, auger and a few simple iron pieces.

In practice, the walls of the jig box may or may not project above the water during all parts of the stroke. When it projects above, then suction is equal to pulsion, that is to say, just as much water will go down through the jig bed per stroke as rises up through it. When, however, the box is immersed, according to the amount of immersion, suction will be more or less diminished, leaving pulsion as much as before and giving a much softer and more open whole bed and one which would complete the separation into layers in much shorter time. This is true because of the lift pump action of a jig, referred to by Hoppe[65], which allows the water to rise more easily than to go down through a jig bed; here the water so pumped up flows over the sides when the jig is immersed. The latter method would be preferable for closely sized material, the former, probably, for mixed sizes.

The hand jig is a valuable means of testing the best conditions for treating any ore by jigging as it can be varied so easily and the results obtained so directly.

For small hand jigs with either movable or fixed sieves, the reader is referred to the subject of testing in Chapter XXI.

Continuous Movable Sieve Power Jigs.

§ 375. All of these jigs have in common a jigging tank, a jigging screen and frame, and in most cases some special connecting joint between the tank and frame; some mechanism for giving the sieve its vertical oscillations; a feeder for bringing ore at a constant speed; and hydraulic water supplied to the hutch. They also have devices for removing the tailings, the coarse concentrates and the hutch product, and for elevating the tailings water, in general returning it into the hutch of the machine. These devices enable them to have a high capacity and a low consumption of water. As generally run they have strong suction owing to the fact that most of the water that passes up through the bed has to pass down again.

§ 376. Movable Sieve Jig at Przibram.[26]—A movable sieve jig used at Przibram (see Figs. 301*a* and 301*b*) has a screen frame of sheet iron sides and ends, 6 feet long, 1 foot 6 inches wide, 8 inches deep, with a horizontal screen and a cross partition *A* 4.13 inches high, dividing it in halves. The screen frame is oscillated up and down by two eccentrics, connecting rods *B* and cross bars attached to it. The eccentrics are capable of giving 2.07 inches throw and less, and

make 140 throws per minute. The feeder is a hopper and trough, jerked by cam *H* and spring. The tank has under the two halves of the screen two hoppers with front side vertical and with continuously discharging spigots *F* for removing the hutch products. Around the frame, upon the tank a wooden strip and a small angle iron make an approximately tight joint to prevent splashing. The tail *G* is of sheet iron, curved to allow the waste to pass over into the well of a screw elevator, which removes the sand with but little water. The water is elevated about 4 inches by a revolving propeller and is sent, probably, back into the two hutches. The coarse concentrates are discharged through a short, vertical tube *C* attached to the screen, which slides in a fixed tube *D* below for conducting away the concentrates. A poppet valve over the mouth of this tube is opened from time to time to let the concentrates pass out. A sheet iron cylinder 6 inches in diameter and covered by a 1-mm. screen is placed over this poppet valve to prevent the quartz from coming down with the coarse concentrates. This cylinder is made adjustable up and down. This jig is designed for treating sized products from 4 mm. to 20 mm. in diameter. At

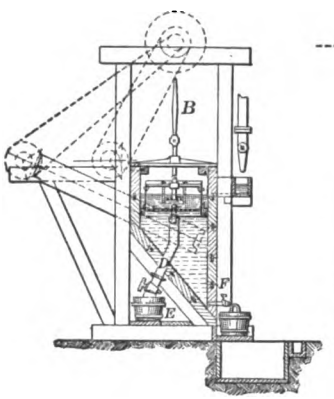

FIG. 301*b*.—CROSS SECTION.

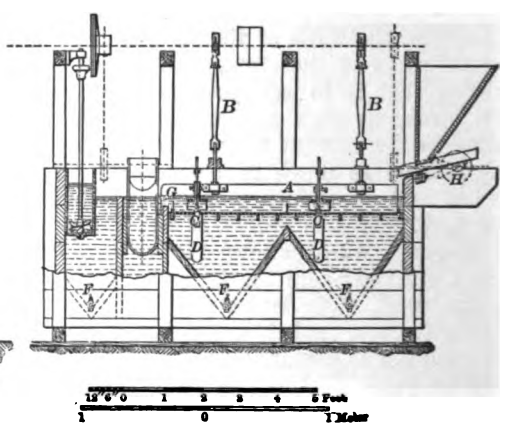

FIG. 301*a*.—LONGITUDINAL SECTION OF MOVABLE SIEVE JIG AT PRZIBRAM.

Przibram it is used on 6-mm. product, with a stroke of 1.24 inches. It requires 2.9 horse power. The tailings discharge continuously, the heads periodically.

§ 377. THE BRADFORD ECCENTRIC JIG.—This is a movable sieve power jig, and Figs. 302*a*-302*d* illustrate the pattern used for many years in concentrating hematite at Iron Mountain, Missouri. The jigging box *d* is of cast iron, 3 feet 1 inch long, 1 foot 7¾ inches wide and 1 foot 7 inches deep. The screen *k* is 6 inches below the top at the feed side and ends and 2¼ inches below the top at the tail side; an adjustable slide *j*, held in place by bolts, enables the last to be increased as desired, up to 5 inches. The screen is supported by a lattice of three lengthwise bars *l* resting edgewise upon six crosswise bars *m* all of which are ⅜ inch thick, 1¾ inches high and are cast in one piece in a frame which is bolted inside the jig box.

At the bottom of the jigging box are extension fins *p* on the sides 2 feet 11 inches long, 7¾ inches wide, $\frac{3}{16}$ inch thick, and on the ends 1 foot 5½ inches long and of the same width and thickness as those on the sides. The jigging box, at its lower end, extends into a fixed frame *r* of ½-inch thick cast iron, 3 feet 3 inches long, 1 foot 9¼ inches wide and 15 inches high, which, as the

jig box rises and falls, confines the currents and guides the concentrates and tailings each to its proper destination. This fixed frame is bolted to the walls of the jig tank. The power is applied by a shaft *t* with fly-wheel *u* and speed cone pulley *v*, imparting motion to the jigging box by two eccentrics *f* and connecting rods *e*. The boxes for this shaft are upon cast-iron standards *a* bolted

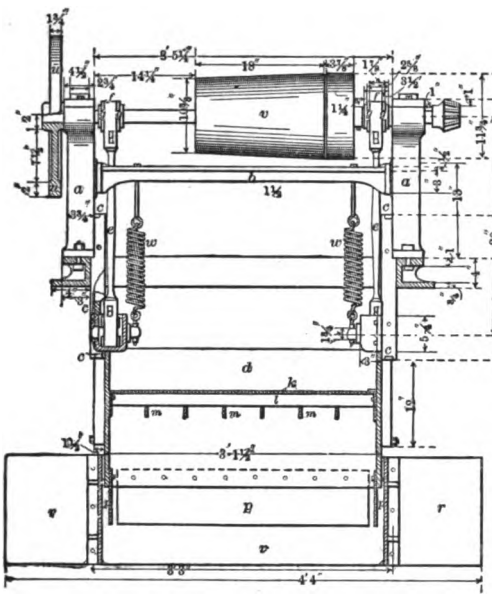

FIG. 302*b*.—LONGITUDINAL SECTION.

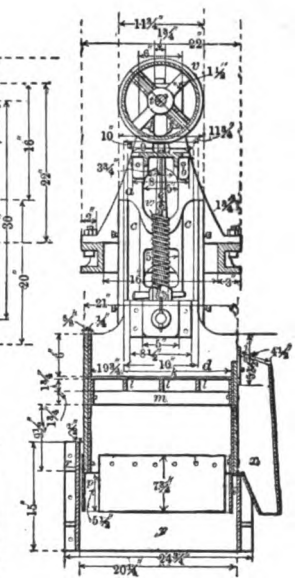

FIG. 302*a*.—END SECTION OF BRADFORD ECCENTRIC JIG.

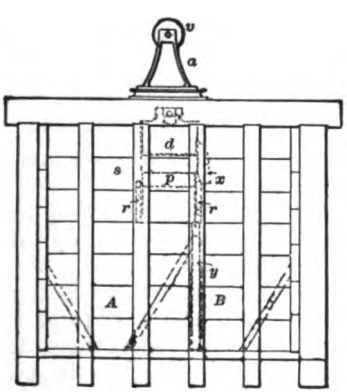

FIG. 302*c*.—END VIEW OF TANK.

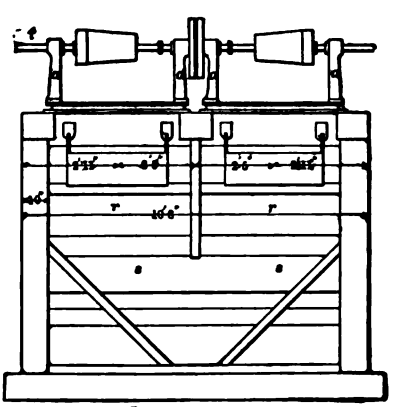

FIG. 302*d*.—SIDE SECTION OF TANK.

to the jig tank. The jigging box at *c* runs in its vertical path between adjustable guides upon the standards. The weight of the jigging box and charge is taken up by two helical springs *w*, one at each end, to even the work of the eccentrics. On the tail side is a discharge spout *x* for discharging the tailings outside of the fixed frame.

The jig tank *s* is 9 feet long and 7 feet deep and is mounted for two jigging boxes. It is built of wood with two compartments 4 feet 6 inches and 2 feet 10 inches wide respectively, the former *A* for the heads, which pass through the screen, and the latter *B* for the tailings, which overflow at the tailings side and pass down through the spout supplied for that purpose. The tailings side of the fixed frame *r* forms an upward extension to the partition *y*, dividing the two compartments. The bottoms of the two compartments are hopper-shaped and form the boots of the elevators which remove the two products, the heads being delivered to a bin and the tailings to a car.

The feed to the jig was a sized product and its amount was regulated by a corrugated cylindrical feeder run by worm gear. The jigging is done upon a bottom bed of coarse ore, and the concentrates pass down through the screen, while the tailings go over the tail side. The jigging tanks are automatically kept full of water.

In Mill 4 a Bradford jig is used which has but one sieve *k* in a tank (see Figs. 303*a*-303*d*), for separating limonite from quartz. The general construc-

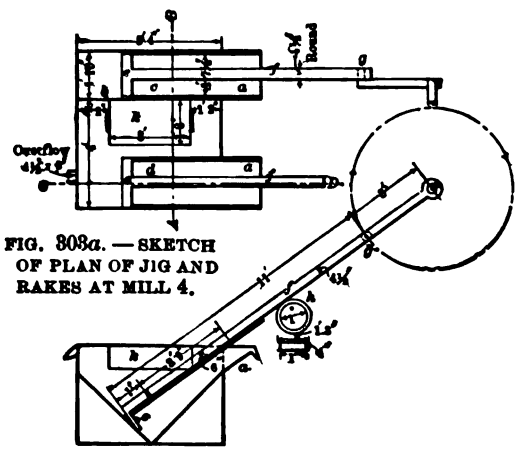

FIG. 303*a*. — SKETCH OF PLAN OF JIG AND RAKES AT MILL 4.

FIG. 303*b*.—SECTION *CD*.

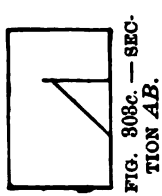

FIG. 303*c*. — SECTION *AB*.

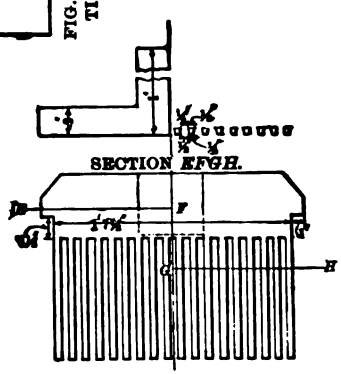

FIG. 303*d*.—RAKE.

tion is the same as that used for the Iron Mountain jig, with the exception that automatic rakes are used for removing the ore and the waste up inclined troughs *a*. For this purpose the bottom of the jigging tank slopes in two directions from a dividing partition *b*. The concentrates, passing through the sieve, roll down into one trough *d* while the tailings going over the edge of the jig box go into another *c*. Two rakes *e* operate, one in the concentrates trough, the other in the tailings trough. Each rake handle *f* is attached to a crank-pin *g* having a radius of 3 feet, and as the crank-pin is returning on the under part of its path, the rake handle lies upon a guide pulley *h* and holds up the rake. When the crank-pin has returned and starts away again, it rises to the upper part of its path and the rake descends to withdraw the product in the trough.

No. 1 jig of Mill 4 is fed with stuff which passes through a 1-inch (25.4 mm.) screen and rests on a ½-inch (12.7 mm.) screen; No. 2 jig, through a ½-inch on a $\frac{1}{16}$-inch (1.56 mm.) screen. No. 1 has a throw of ½ inch and

makes 188 throws per minute. Both use bottom beds of lump ore on the sieves, and yield heads to picking table and tailings to waste.

§ 378. THE CONKLING JIG.[30]—(See Fig. 304.)—This is a circular, movable sieve jig which is fed near the circumference and discharged at the center. The screen is 3 feet 10 inches in diameter, has a $\frac{5}{16}$-inch (7.9 mm.) hole, and revolves 7 times per minute, to give an even distribution of the feed. It is fed with dry ore, $\frac{1}{4}$ inch (6.35 mm.) to 0 in size and uses a bottom bed consisting of ore of the size of hickory nuts. It has 260 pulsations per minute of $\frac{3}{8}$ inch given to it and yields tailings and hutch products only, both of which are taken out by elevators. The downward movement of the sieve is rapid; the upward is slow. The capacity on magnetite at Lyon Mountain, New York, was 5 tons per hour and it used 135 gallons of water per minute, or 1,620 gallons per ton

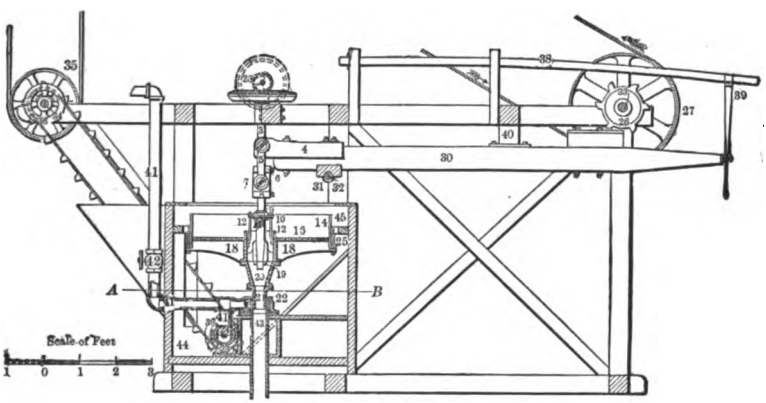

FIG. 304.—SECTION OF CONKLING MOVABLE SIEVE JIG.

1. Bevel-wheel.
2. Pinion.
3. Upright shaft.
4. Shoe.
5. Link.
6. Upper collar.
7. Trunnion-piece.
8. Lower collar.
9. Outside nut.
10. Flange.
11. Inside nut.
12. Standard.
14. Hoop.
16. Screen-plates.
18. Spider.
19. Key.
20. Cone.
21. Water-sleeve.
22. Water-box.
23. Lower elevator-box.
24. Lower elevator-shaft.
25. Band-arms.
26. Cam-wheel.
27. 36-inch pulley.
28. Pinion-shaft.
30. Lever-beam.
31. Yokes.
32. Lever-shaft.
33. Driving-shaft.
34. Top elevator-shaft.
35. 24-inch pulley.
36. Flange-pulleys.
38. Spring-pole.
39. Strap.
40. Bumper.
41. 3-inch water-pipe.
42. Regulating-valve.
43. Outlet-pipe to tail-race.
44. Tub.
45. Splash-rim.

of ore treated. One man or boy tended two jigs. The feed contained 43.6% iron; the concentrates 66.9% iron, and the tailings 22.9% iron.

§ 379. THE SCHRANZ JIG.—This is a rectangular jig with a screen frame 9 feet 6 inches long, 3 feet 3 inches wide, divided into seven panels. It has a water-tight bellows joint of leather or rubber connecting it with a V tank below, which is divided into as many hutches as desired, each with a separate spigot. It receives motion from vertical rods which are driven from rocking eccentrics. It is used for jigging slimes and has a bottom bed which decreases in thickness toward the tail. "One machine treats 450 kilos of the finest crude ore per hour, using 65 liters water per minute, requiring less water ($\frac{1}{2}$), but more power than a 16-foot slime table, and making cleaner tailings.[64]"

§ 380. BILHARZ OBLONG, MOVABLE SIEVE POWER JIG, used in Freiberg, has

an iron screen frame 30 inches long, 13 inches wide at the head, 10 inches wide at the tail and 1½ inches height of tail. It is made narrower at the tail to hasten the work, as most of the work is done in the first third of the length. It is oscillated by a single eccentric with T rod, driving two forks running in guides. The four feet of these two forks are bolted to the screen frame. All round the screen frame is a leather packing to prevent the water from rising between it and the tank. The tank is hopper-shaped with a cross partition for making two hutch products. Two or more of these jigs are usually run in series. The tail of the jig frame has a spout extending over the edge of the tank and conveying the sand and water to the next jig. This is possible, owing to the lift pump action of the jig, which elevates the water above the jigging sand to a higher level than that in the tank. There may be an under launder conveying the tank overflow, should there be any, to the next jig. The concentrates are wholly made in the hutch, and screens and bottom beds are used to suit these conditions. The spigots have goose-necks or rising discharges. It has 220 pulsations per minute of 5 mm. each, and is designed for treating sand. Three *spitzlutten,* two jigs and two Bilharz tables, treat 3 tons in 10 hours; the jigs treat 1 ton each; the tables ½ ton each.

THE BILHARZ CIRCULAR SIEVE POWER JIG.—This machine has an annular moving jig frame divided into six sectors, 2.2 m. outer diameter and 0.674 m. inner diameter. It receives pulsations from a central eccentric rod through levers. The feed is distributed at the outer rim; the tailings are discharged inward in a central pipe; and the hutches, which are separate for each compartment, are discharged through rising goose-necks around the circle. With 200 to 220 pulsations per minute of 5 to 6 mm., it treats in one hour 30 cubic meters of pulp, containing 1,200 kilos of dry, solid material.

§ 381. THE ROBINSON JIG is a movable sieve jig in which the head end pulsates the most and the tail end the least. This movement is obtained by pivoting the tail end to the tank and oscillating the head end by means of a crank. The tank is 12 feet long, 6 feet wide and 6 feet deep. The sieve is 10 feet long with grate bars extending the whole length. Above the sieve are cross dams 4 inches high to keep the bottom bed in place. It jigs through the sieve into the hutch and also has side discharges to prevent the bottom bed from getting too deep, which discharge coarse concentrates into the hutch. It has 80 pulsations per minute and requires 500 pounds of material for the bottom bed. The water reaches 1 foot above the sieve. In Southern Missouri, where both are used, it saves 10% more than a hand jig on unsized zinc-lead ores. The tailings pass over the tail board and are removed by an elevator.

§ 382. THE HANCOCK VANNING JIG,[114a] used at Broken Hill, New South Wales, and in other parts of Australia, has a jig box *S* (see Figs. 305*a*-305*e*) about 2.5×20 feet inside dimensions, with tail board about 4 inches high. This jig box is suspended in the jigging tank by four T-bolts and two cross bars *J*. The cross bars extend horizontally beyond the sides of the jigging tank and are supported upon four vertical connecting rods *D*. These receive, at their lower ends, an up and down motion from four short levers *C* which are moved by the cam wheel *A* through the long weighted levers *B*. A hand wheel *H* raises or lowers the stop *F* and controls the amount of the motion. There are also two links *K*, one on each end of the head cross bar which connect the latter to the sides of the jig tank and thereby maintain the stability of the jig box. The points of connection of the links to the jig tank are made adjustable by means of a slot. This serves to vary the direction of motion of the sieve to any desired degree from about 25° to about 70° with the horizontal. The position commonly used causes the jig box to move on a slope of about 45° and thereby gives a vanning motion to the sieve and compels the material under-

going concentration to travel toward the tail end of the sieve. Water is supplied in the hutch as shown and the concentrates pass through the sieve and fall into compartments in the hutch from which they are drawn off as desired, while the tailings pass over the end of the sieve into a special compartment.

At the Moonta mines where most of the rock is crushed through a sieve with twenty holes to the square inch, one of these jigs treats as much as 175 tons per

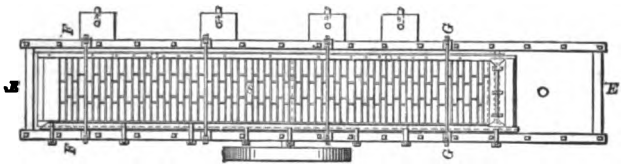

FIG. 305*a*.—PLAN OF THE HANCOCK JIG.

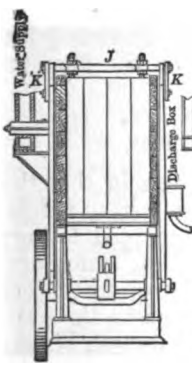

FIG. 305*c*.—END ELEVATION *GG*.

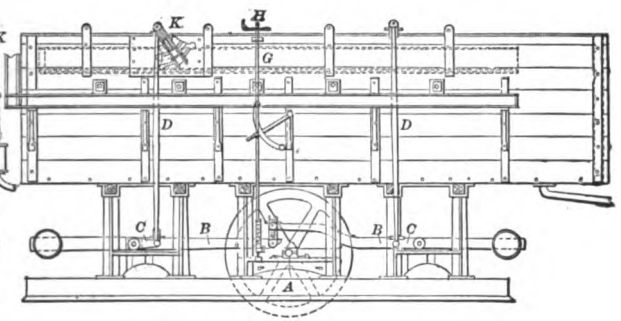

FIG. 305*b*.—SIDE ELEVATION *EE*.

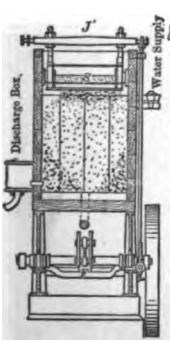

FIG. 305*e*.—SECTIONAL END ELEVATION *FF*.

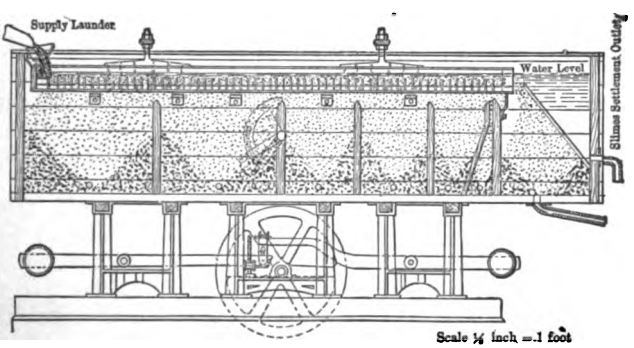

FIG. 305*d*.—SECTIONAL SIDE ELEVATION *EE*.

day (probably 24 hours), and requires about two horse power. The feed contains 2 to 4% copper and the concentrates 19 to 20% copper. In other places, the capacity varies from 140 to 240 tons in 24 hours.

HOOPER'S VANNING JIG, used in this country to treat garnet, is a movable sieve jig which has the tail end of its jig box suspended from a pivot by a ver-

tical rod with rigid connection to the box and of adjustable length. The head end is given an approximately up and down motion by a vertical connecting rod leading to an eccentric while the tail end has a motion very nearly horizontal. In one case the lengths of the suspending rods at the tail end and of the connecting rods at the head end are 7 inches and 69⅜ inches respectively. The jig box is 24 inches wide and 50.5 inches long. The sieve does not extend all the way to the tail end, however, but is replaced by a solid bottom for the last 14.5 inches. The sieve has a slope up toward the head end which is adjustable but averages about 2.5°. The depth of material on the sieve varies from 1.5 to 3 inches. The throw of the eccentric varies from ⅜ inch to 1 inch. The jig is fed at the middle and the vanning motion is such that the coarse concentrates work up to the head end and pass over automatically in case of an easily concentrating ore, otherwise they are skimmed off; the concentrates which pass through the sieve into the hutch are lifted out by a bucket elevator; the tailings overflow continuously at the lower end of the sieve.

This jig is adapted to different jigging problems on stuff between ¼ inch and 30 mesh. Its capacity ranges from 5 tons per 24 hours on the finer material to 7 tons on the coarser.

Intermittent, Movable Sieve, Power Jigs.

§ 383. These differ from the continuous, movable sieve jigs in that the feeders, the hydraulic water, the discharges for coarse concentrates, hutches and tailings, are all left out. They are practically hand jigs adapted to power.

Mill 12 has as No. 1 jigs four movable sieve, Cornish jigs, which are much like the hand jig in Figs. 300*a*-300*d* except that they are driven by power. The jigging box is 22 inches wide, 46 inches long, 7 inches deep above the screen and 3 inches below it. It is made of 1-inch boards and has a 5-mesh screen in it. The jigging lever has a long arm of 4 feet 2 inches and a short arm of 10 inches. The long arm is driven by an eccentric with a throw of 5 inches; giving the jig a throw of 1 inch. The tank is 30 inches wide, 54 inches long and 7 feet deep. Its feed is from 2 mesh downward. Ore is shoveled into the jigging box until it is 8 inches deep; then the jigging box is connected with power and allowed to jig for 6 minutes. Next, the lever is disconnected with the power; the sieve is lifted out of the water and held there by a hitching post. The skimming by hand yields top skimmings which are waste, middlings which are returned, coarse concentrates which go to the smelter, and the hutch which is allowed to accumulate until it is finally shoveled to No. 2 jigs. There are two No. 2 jigs and nine No. 3 jigs similar to the No. 1 jigs.

At the Hartman mine, Friedensville, Pennsylvania, the jig is similar to that in Mill 12, but its method of working is as follows: Starting with a bed of coarse tailings 1 inch thick from the previous skimming, a layer 2 inches thick of ore to be concentrated is fed. After jigging for five minutes, another layer of 2 inches is added and the jigging repeated, after which the jig is lifted out of water and the top layer of limestone tailings is skimmed off. This is repeated until the box is half full of coarse concentrates, when the top layer of limestone skimmings is scraped to one end, the concentrates removed, the skimmings being thrown back in the place of the concentrates, the other half of the concentrates shoveled out, the limestone bed spread evenly and work resumed. The coarse limestone bed prevents the new charge at the start from falling through the screen without being enriched.

At the Saucon mine at Friedensville, Pennsylvania, a similar jig is raised by a cam and dropped by its own weight. It has an automatic bell discharge for coarse concentrates, which makes the machine more nearly a continuous machine.

Rittinger describes a similar jig, raised by a cam and forced down by a spring. For the capacity of it he gives the rule that every square foot of sieve surface will treat 3 to 4 cubic feet of ore per hour. He further says that one man can attend to two jigs.

Fixed Sieve Jigs.

§ 384. In these machines the screen is stationary and the water is forced to rise and fall through it by the action of a piston or plunger which is generally placed in an adjacent compartment connected with the hutch or space below the screen. These machines are almost always driven by power and are the forms in general use to-day. There are two classes of these jigs: (1) The Harz type, where the plunger receives its up and down motion from an eccentric revolving at uniform rate. (2) The accelerated jigs, in which some form of mechanism is adopted to give the plunger more rapid motion during pulsion than during suction. The term Harz jig has been used loosely in the literature of the subject. The author has, therefore, adopted the above definition which is the one commonly accepted in the United States.

§ 385. The Harz Type of Jigs.—This machine has found far more favor than any other jigging machine. It is used successfully for coarse and fine ores, for higher and lower specific gravity minerals. By it two, three and even four mineral separations can be made.

It consists of a jigging tank with vertical longitudinal partition, on one side of which is the screen upon which the ore rests; on the other side is the plunger for creating the currents. As the partition does not reach the bottom, there is free passage for the water from the plunger to the sieve compartment and return. The jig may have one or more jigging compartments, each with its own sieve and plunger, separated by cross partitions; two, three and four are the most common number of these compartments, although as many as seven have been used in Southwest Missouri.

The Harz jigs used in Mill 37 are shown in Figs. 306*a*, 306*b* and 306*c*. These are the 4-sieve jigs used in that mill for medium and fine work. For coarser work, jigs with two sieves are used (see Fig. 307), which are constructed just like the first half of the 4-sieve jigs.* Each sieve compartment *A* is 34½ inches long and 16½ inches wide, net size inside the lining *P*, and the plunger compartments *B* are 34½ inches long and 14½ inches wide, net size. Beneath every sieve and plunger is a hopper *C* which serves for connecting the two and also for collecting and discharging the hutch product. For convenience, the apex of the hopper is brought nearly to the front side of the jig. Near the apex of each hopper is a spigot which consists of a round hole *D* 2 inches in diameter passing through the plank and through an outside plate. This hole has a plate cover *E* outside, which, sliding around a pivot, serves to shut off or regulate the flow. Between each sieve and plunger compartment is a continuous longitudinal partition *F* which extends down 12, 11, 10 and 9 inches respectively below the sieves *N* and serves to distribute the pulsion from the plunger *U* evenly over the sieve. The ends, sides, bottom and partitions are all built of 2½-inch planks.

Two jigs are placed back to back and their tanks are supported and bound by timber frames of which there are three sets on the 2-compartment jig and five on the 4-compartment. Each set consists of a sill *G*, two outside posts *H*, a center post *I* and a cap *J*. The caps serve as supports for the driving mechanism and while the posts likewise serve this purpose, they are also made to do the important duty of buckstaves by two ⅝-inch tie rods *K* for each set.

* Later reports state that these 2-sieve Harz jigs are not now used.

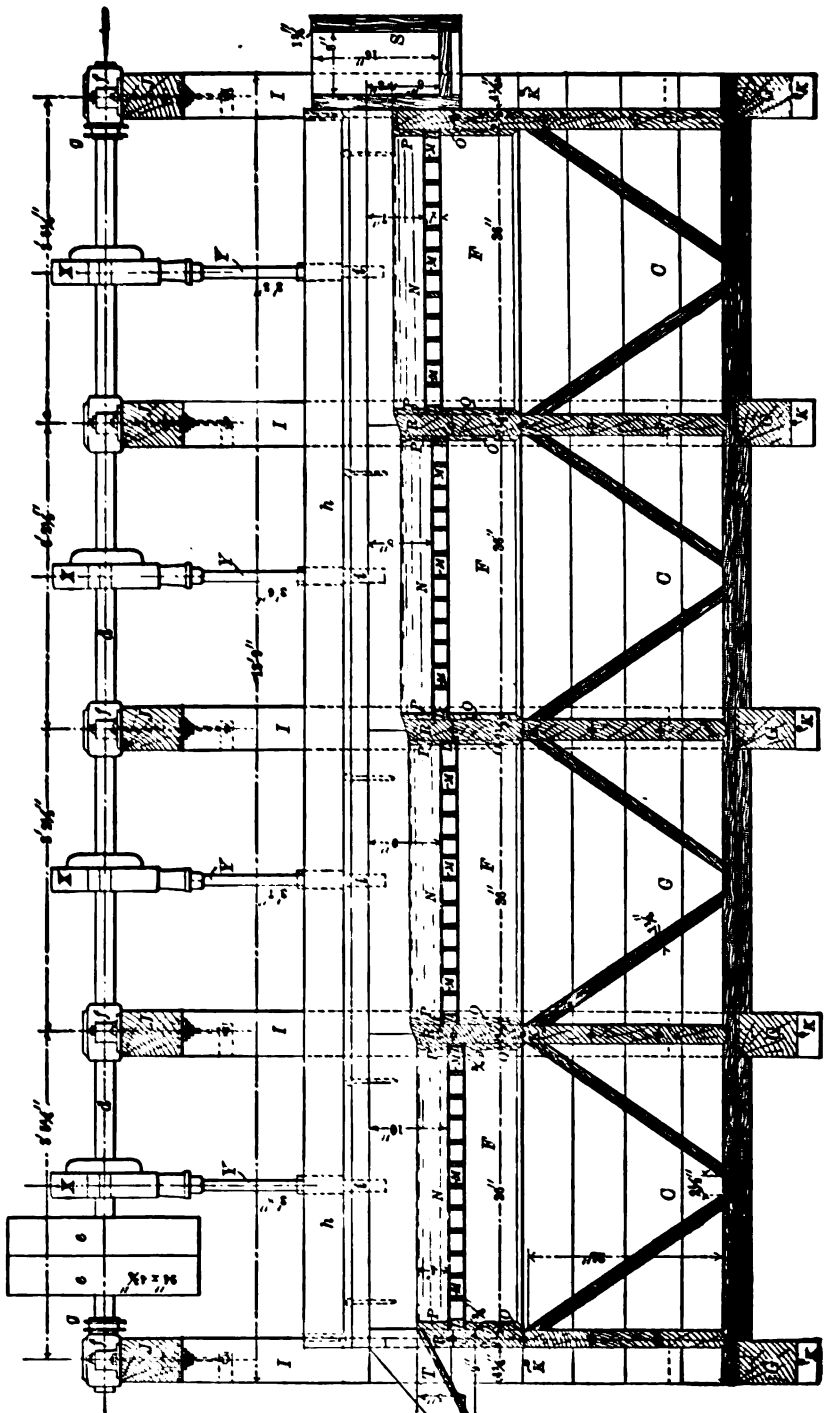

FIG. 306a.—LONGITUDINAL SECTION OF THE 4-COMPARTMENT DOUBLE HARZ JIG AT MILL 87.

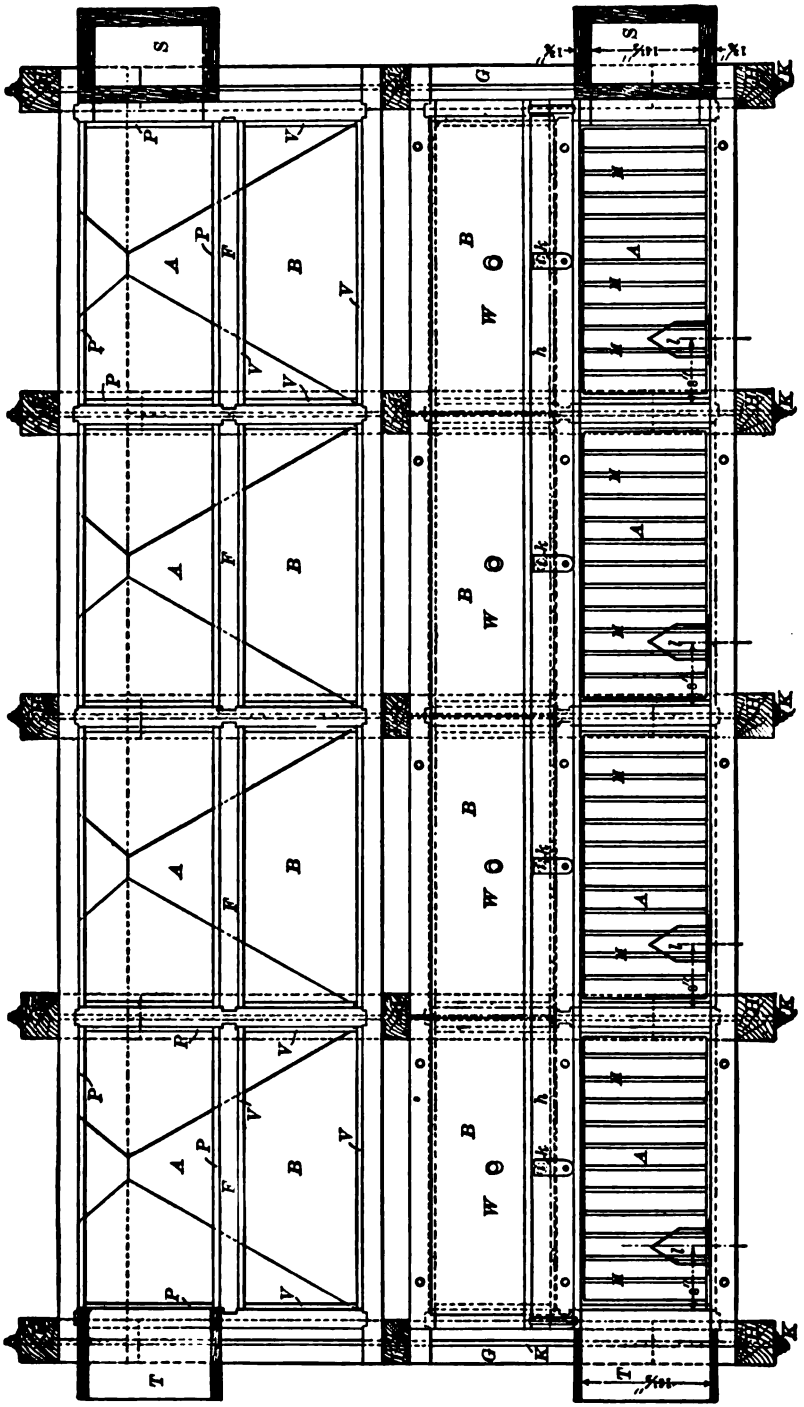

FIG. 306b.—PLAN.

The screen frame is built of 2×1-inch strips *L* on edge, with cross bars *M* ½ inch thick. The screen *N* is tacked to the top of this and the whole thing rests upon a ledge or lining *O* of ¾-inch boards extending all around the compartment. It is held down by ¾-inch board linings or cleats *P* above. This arrangement makes the surface of the wall of the compartments nearly continuous without obstructions. Between each sieve and the one following is a cross partition or tail board *R* 4 inches above the sieve. The top of the partition slopes downward toward the following sieve, which is placed 1 inch lower. The slope is such that the ore is delivered on a sieve at the same level as it leaves it. Before the first sieve is a dead box *S* 16 inches deep and 8 inches wide, which serves to deliver the feed quietly to the whole width of the sieve through a slit 3 inches high and 6 inches above the bottom. A gap is cut at the tail end of the last sieve and a spout *T* put on for carrying away the tailings from the whole width of the sieve.

The plungers *U* fit loosely in their compartments and are made of five thicknesses of ¾-inch board. The second and fourth layers have their grains at 90° with that of the others. They are also ½ inch smaller in length and width to form the water packing. The plunger compartment is lined with ¾-inch boards *V* to take up the wear. To confine the swash it has a cover *W* of 1-inch board with a hole in the center for the plunger and one at the side for the hydraulic water pipe. The top of the plunger is 3 inches below that of the sieve when at the middle of its stroke. A reciprocating motion is given to each plunger from an eccentric *X* through a 1¼-inch eccentric rod *Y*. The plunger is attached to the rod by means of a shoulder and washer *a* above and lock nuts and a washer *b* below. The eccentrics are adjustable to give any throw from 0 to 2 inches and are all placed upon the same shaft, so as to pulsate approximately together. Details of the eccentrics are given in Figs. 306*d*-306*g*. The shaft *d* is 2 7/16 inches in diameter and is supplied with a tight and a loose pulley *e*, each 24 inches diameter and 4¾ inches face. There are also five boxes *f*, one on each of the frames and there are two collars *g* for guiding the shaft.

The hydraulic water is put in on top of the plungers and is distributed to each compartment from a trough *h* running the whole length of the jig on the longitudinal partition, in the bottom of which are nipples *i* of 1¼-inch pipe covered by sliding gates *k* for regulating the quantity.

The discharge for coarse concentrates consists of an iron pen *l* which acts as a gate for them to pass under and a pipe *m* which acts as a dam for them to pass over. The pipe may be slid into the wall of the jig, thereby adjusting the height of its inlet end. The details of the discharge are given in Figs. 306*h* and 306*i*.

§ 386. THE COLLOM JIG.—(See Figs. 308*a*-308*c*.)—This is an accelerated jig, formerly made of wood, but now generally made of cast iron. As made by Charles J. Hodge, the iron jig tank, ⅝ inch thick, is rectangular above with two hoppers *AA* below. In each hopper, the side *B* next to the plunger slopes 43°, the other three sides slope 50°, down to a base 4 inches square. The upper part of the tank is divided by two longitudinal partitions *CC* of ⅝-inch iron into three nearly equal parts; the two outside ones are for the two sieves, each 24×36 inches, while the center part is again divided by a cross partition *D* of iron into two parts, each 22×17¾ inches, for the two plungers. Each sieve has its own plunger and the bottom of each plunger compartment is closed by a horizontal partition covering about ¾ of its area; the remaining ¼, which is 9¾×10¾ inches, is left open to convey out the impulse to its sieve. This restricted opening is for the purpose of distributing the pulsion to the more distant parts of the sieve. The hydraulic water is introduced into the hutch through either of the openings at *E*, but generally at the head end. It will

be noticed that the plunger for one sieve is adjacent to the head half of the sieve, and for the other, to the tail half. In consequence of this arrangement, the two sieves are called head plunger sieve and tail plunger sieve respectively.

The plunger movement consists of a vertical rod *F* attached to the plunger *P*, running in upper and lower guides *GG*. A helical spring *H*, in state of compression, rests on the lower guide and presses upward against a collar *I* on the rod by which it lifts the plunger during suction. This collar, by striking the upper guide, limits the upward journey of the plunger. At the top of the rod, a cap *K* and a lock nut are placed and upon the cap a rubber buffer which takes the blows of the hammer. These blows give the pulsion to the sieve. The two heavy hammers *LL* are at the ends of the arms of a double oscillating bell crank. The amount of the blow and, therefore, of the pulsion, can be varied by raising or lowering the cap. Washers may be put beneath or

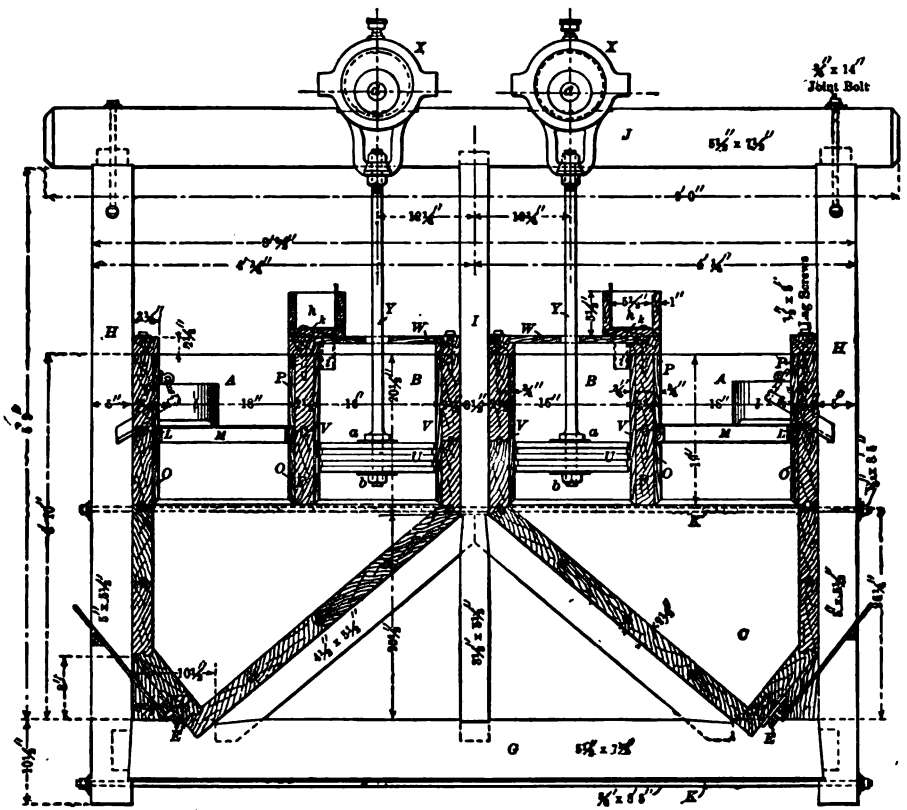

FIG. 306*c*.—CROSS SECTION.

above the spring to increase its compression in case a quicker movement during suction is desired. The lower guide is sometimes made adjustable for this same purpose. The oscillating bell crank is driven by a shaft with tight and loose pulleys, fly-wheel, crank and connecting rod. For most places in the mill, two or three jigging tanks are connected by aprons (see Fig. 309). Power is transmitted from the bell crank of the first by connecting rod to that of the second, and in the same way from the second to the third. The sieves on each side act together in tandem connection, the second re-treating the tailings of the first

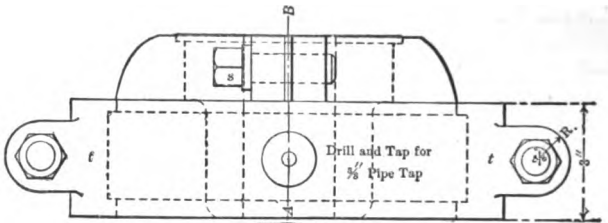

FIG. 306*d*.—TOP VIEW OF ECCENTRIC IN MILL 37

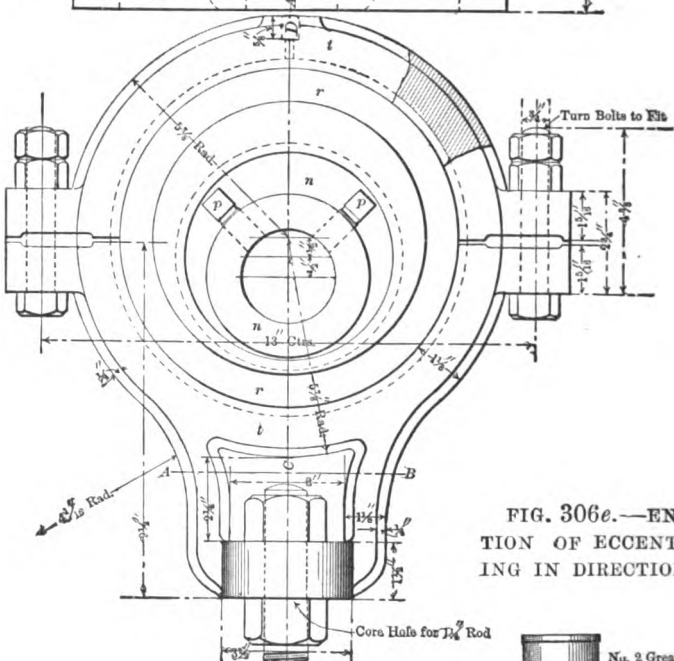

FIG. 306*e*.—END ELEVATION OF ECCENTRIC LOOKING IN DIRECTION *AB*.

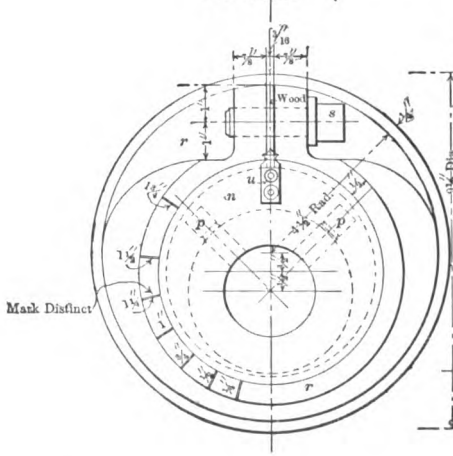

FIG. 306*f*.—END ELEVATION OF ECCENTRIC WITH STRAP REMOVED, LOOKING IN DIRECTION *BA*.

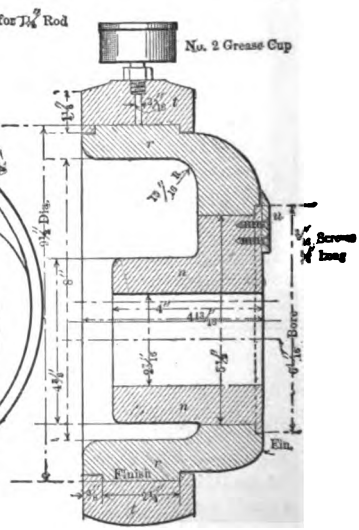

FIG. 306*g*.—SECTION ON *CD*.

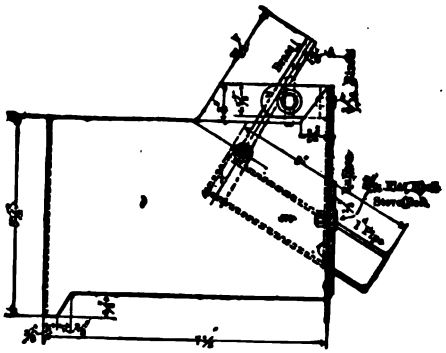

FIG. 306*h*.—ENLARGED ELEVATION OF AUTOMATIC DISCHARGE IN MILL 37.

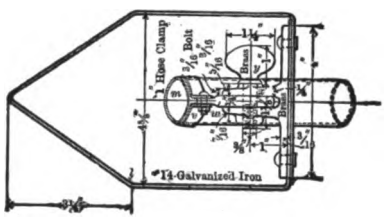

FIG. 306*i*.—ENLARGED PLAN.

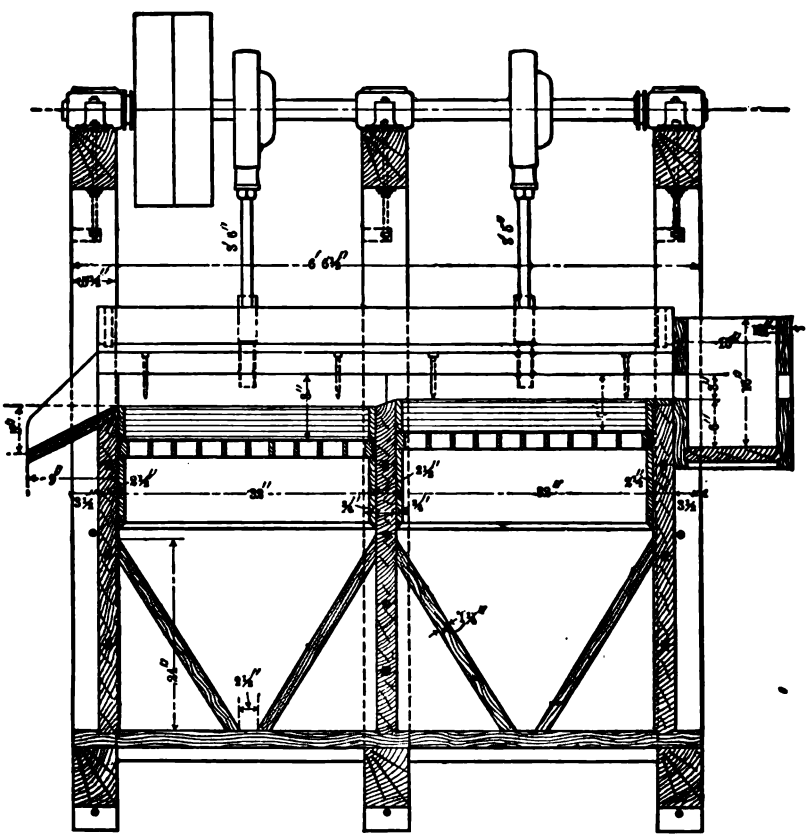

FIG. 307.—SECTION OF TWO-SIEVE HARZ JIG OF MILL 37.

and the third of the second. The two sides are, therefore, in effect two separate jigs with two or three compartments, and may be treating two separate products, each with its own special adjustments. The author has treated them as such in every case.

The eccentricity of the crank (see Fig. 308*b*), is $1\frac{1}{4}$ inches; the length of the vertical and horizontal arms of the bell crank are $8\frac{1}{2}$ inches and $9\frac{1}{4}$ inches respectively, giving the total movement of the hammer to be 2.72 inches. The plunger throw used in the mills ranges from $\frac{5}{8}$ inch to $\frac{3}{16}$ inch. The hammer, therefore, strikes its blow when very near the end of its stroke, but its motion is sufficiently rapid to give a quick, sharp down stroke to the plunger, and since

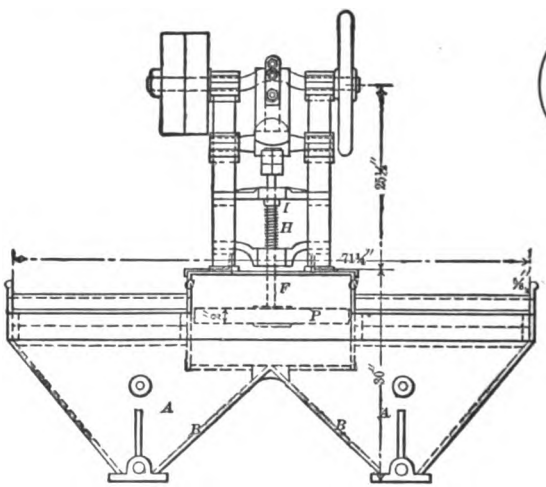

FIG. 308*a*.—END VIEW OF COLLOM JIG.

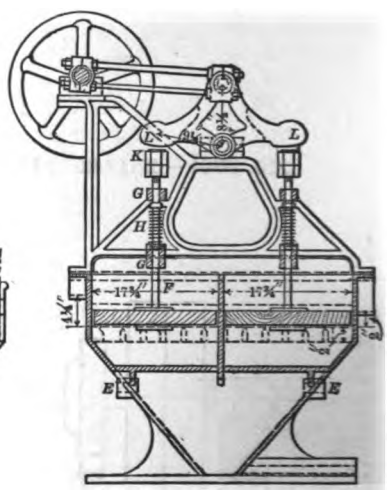

FIG. 308*b*.—SIDE SECTION.

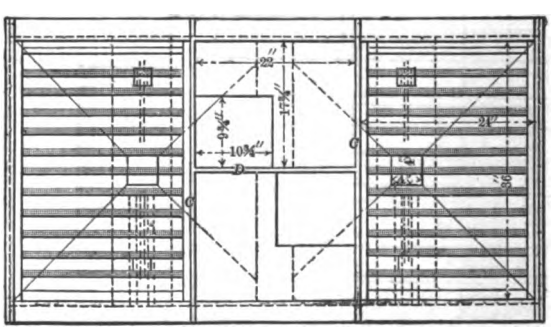

FIG. 308*c*.—PLAN.

the spring returns the plunger slowly, it is an accelerated jig. On account of the difficulty of lifting a heavy jigging bed, the tail boards of this jig are set low. They vary in the mills from 3 to $3\frac{1}{2}$ inches in height.

The advantages of the Collom jig are: (1) It is an accelerated jig, reducing the speed during suction, preventing the blinding of the sieve and the formation of hard banks. This probably actually diminishes suction, owing to the leak of the plunger and the inflow of the hydraulic water beneath the sieve. (2) The throw can be adjusted in a moment while the jig is at work, placing this among the frequently used adjustments. (3) The whole machine is open

and free from obstructions and very handy to work. These advantages are obtained by a sacrifice of plunger area and by a restriction of the opening between the plunger and sieve compartments.

In Mill 35 Collom and Harz jigs have been run side by side and the following opinions are given as a result: The Collom jig uses more water than the Harz and has less capacity, four Harz jigs being thought to do the work of eight Colloms. The Collom jig has a higher running cost, owing to springs which have to be frequently replaced.

At Lake Superior the roughing jigs probably do quite as much work as would a Harz jig if similarly placed, while the fine finishing jigs do less than any Harz known to the author, but there are no Harz jigs doing that class of work with which to make a fair comparison.

The use of the Collom jig is restricted to certain localities. It is used in

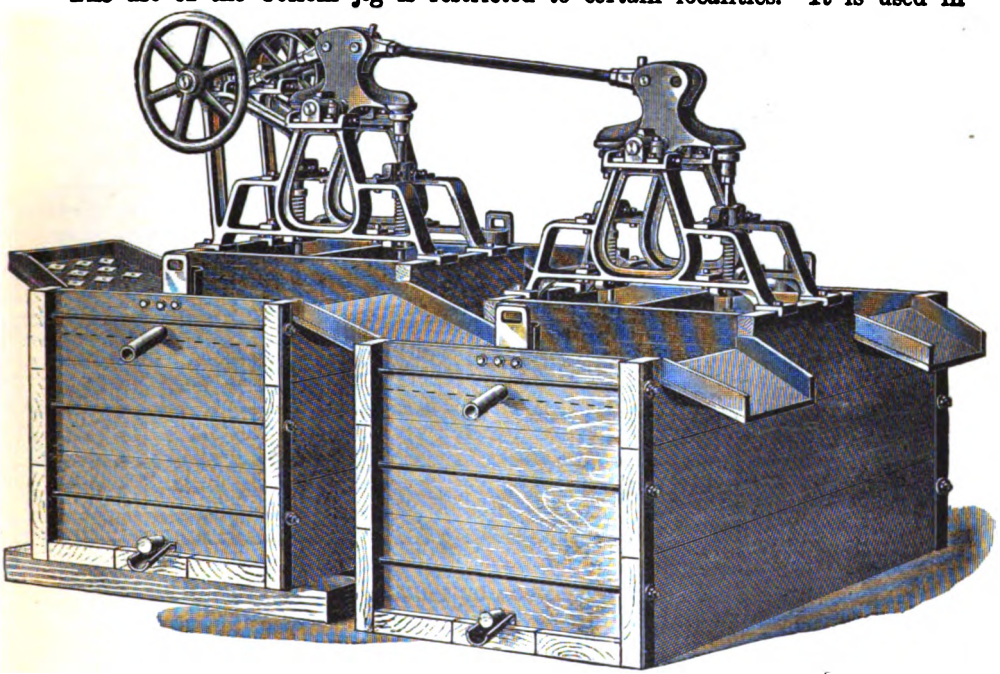

FIG. 309.—WOODEN COLLOM JIG SHOWING TANDEM CONNECTION.

Mill 35 and at Broken Hill, Australia, upon silver lead ores, in Mill 42 upon copper silver ores, and in Mills 44, 45, 46, 47 and 48 upon native copper. While it is standard in all these mills except 35, its use does not seem to be on the increase. In fact there is a tendency even at Lake Superior in working the coarse material to design new jigs which shall have the advantage of the Collom, but have the more positive motion of the Harz jig, while on the finer material they are being driven out in many cases by tables of the Wilfley type.

§ 387. MODIFICATIONS OF THE COLLOM JIG.—In Mill 13 the Collom jig is used as a single compartment jig, that is, two sieves are mounted in one tank, side by side, and the tailings are waste after passing over one sieve. The tail board is 5 inches high and the machines are jigging grains up to ¾ inch in diameter, all of the concentrates going into the hutch. Owing to the extraordinarily heavy work, the common helical springs of steel or brass gave great trouble, breaking at times as many as six per day on eight sieves. A flat steel

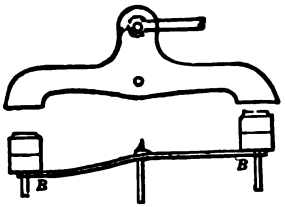

FIG. 310*a*.—ELEVATION OF DUDLEY SPRING AT MILL 13.

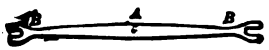

FIG. 310*b*.—PLAN.

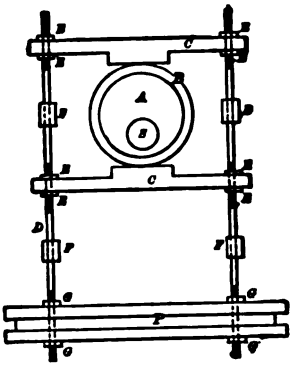

FIG. 311.—EVANS JIG MECHANISM.

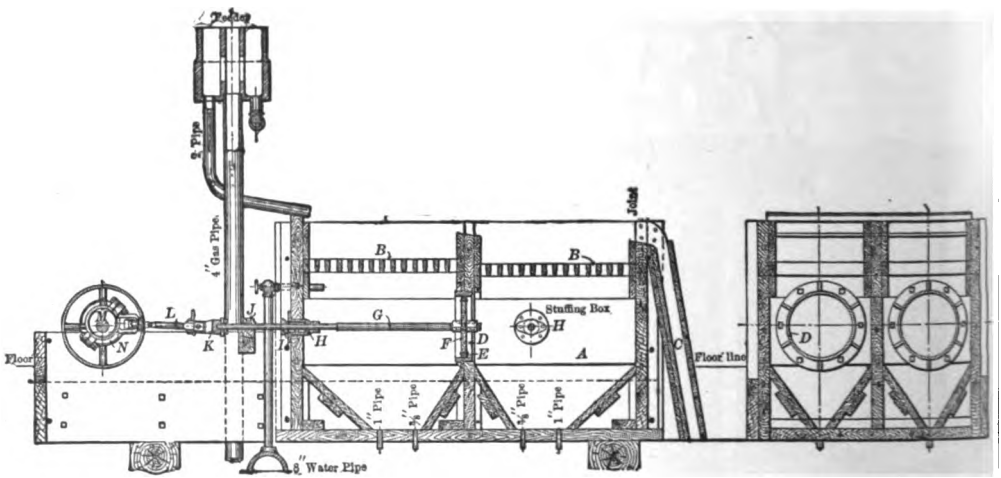

FIG. 312*a*.—LONGITUDINAL SECTION OF THE PARSONS AND FISHER JIG.

FIG. 312*b*.—TRANSVERSE SECTION.

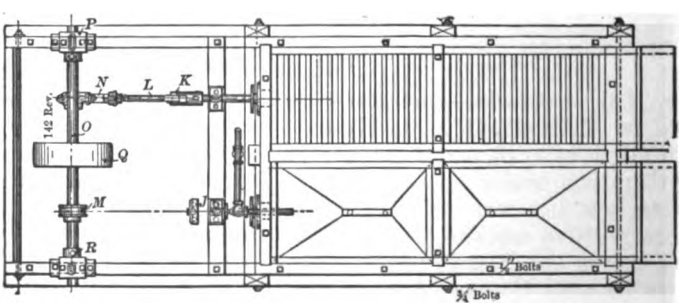

FIG. 312*c*.—TOP VIEW.

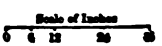

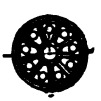

FIG. 312*d*.—SECTION AND TOP VIEW OF FEEDER

A. Jig Box.
B. Screen Frames.
C. Tailing Spout.
D. Jig Cylinder.
E. Packing Ring.
F. Piston Plates.
G. Piston Rod.
H. Stuffing Box.
I. Gland.
J. Guide Box.
K. Spade Handle.
L. Pitman.
M. Eccentric.
N. Yoke.
O. Shaft.
P. Journal Box.
Q. Pulley.
R. Loose Collar.

spring (see Figs. 310*a* and 310*b*), invented by A. P. Dudley, has been adopted, which lasts six months. This is a flat steel spring with both ends forked and the two ends placed under the lock nuts of the two plungers. The spring rests on a fulcrum at *A* midway between the plungers. At *A* the width of the spring is 2½ inches, while the thickness for heavy work is ⅜ inch and for light work, ¼ inch. At *B* the width and thickness are 1½ and ¼ inches respectively. It will be seen that the blow of the hammer upon one plunger rod causes the spring to react and lift the other. This modifies the return velocity of the plunger by causing the repose at the lowest point perhaps to be slightly longer and the return to be at a higher speed.

In Mill 43 the expense of the springs suggested the following experiment: One collar was attached by a set screw to the neck of the hammer; a second in the same manner to the plunger rod; a connecting rod with pin joints connected these two collars to each other. This device caused the plunger to rise with the hammer and did away with the spring and with the accelerated and retarded motion of the Collom jig, making it virtually a Harz movement. This arrangement not only saved the cost of springs, but it caused the jigs to do better work.

The Evans jig, used in Mill 38, is a Collom jig which has been modified so as to get a rectilinear motion (Harz type), (see Fig. 311), consisting of an adjustable eccentric *A*, a friction ring *B*, two horizontal cross bars *C*, one above and one below, with sliding bearings, two plunger rods *D* held to the cross bars by lock nuts *E* and running in four guides *F*, and held to the plunger *P* by nuts *G* above and below. The shaft *S* runs across above the center of the two plungers and drives them both in opposite phases of the movement.

The jigging tank is divided by longitudinal partitions into halves below, and into four parts above. The under parts consist of two hoppers leading to the spigots. The upper divisions consist of two sieve compartments outside and two plunger compartments inside; the latter are half the width of the former, but are of the same length. It will be seen, therefore, that, unlike the Collom jig, the sieve receives symmetrical action of the plunger throughout its entire length.

Charles J. Hodge, of Lake Superior, has designed two jigs, both of which have much the same arrangement of sieve and plunger compartments as the Evans jig; one form has the Harz plunger motion; the other has a positive accelerated and retarded motion obtained by the disc transmission (see § 410).

§ 388. The Parsons and Fisher Jig.—(See Figs. 312*a*-312*d*.)—This in effect belongs to the Harz type. It is mounted in pairs of two jigs with two sieves each, four sieves in all, in one tank. The net jigging size of the sieves is 22×37 inches. The plungers are arranged to do away with the plunger compartments by placing a plunger for each jig in the vertical partition between its two sieves. This plunger is circular and executes its reciprocating motion in a short cast iron cylinder, 15½ inches in diameter and 4 inches long, built into the partition. It is driven by a horizontal piston rod coming in through a stuffing box in the head end of the hutch of the first sieve, connected to an eccentric through a cross head and connecting rod. The pistons of the two jigs are driven from the same shaft by one pulley and belt. The piston is of wood 1 inch thick, made tight by a steel spring packing ring and iron followers. On its forward motion it gives pulsion to the second sieve and suction to the first; on its return motion the effects on the two sieves are reversed. The hydraulic water is admitted into both hutches and not into one only as shown in Fig. 312*c*.

This jig is used as the No. 4 jig in Mill 24 and as the No. 1 jig in Mill 25. In the latter case it has two spigots in each hutch. One is ¼ inch in diameter and flows continuously. The other is 1 inch in diameter and is drawn down occasionally to let out the ore that has collected. In this mill the jig is fed

with unsized product passing through a 6-mm. round hole and treats 10 tons per 24 hours, using a sieve with holes 2.8×3.0 mm. It uses in the hutches of a single jig 25,000 gallons of water in 24 hours, and for feed water, 23,000 to 26,000 gallons.

The advantage of this jig is its economy of space, and it is probably the handiest jig on the whole list to work around. The disadvantages are the troublesome wear of the piston and stuffing box, both of which have to work in gritty water, and the inaccessibility of the piston.

§ 389. McLanahan's Jig has no acceleration. It is a single sieve jig for jigging iron ore. As shown in Fig. 313, it has a circular, tight fitting plunger *A* at the head end of the sieve instead of at the side. The lattice bars *B* supporting the sieve are given a slope upward toward the tail of the sieve, which causes the pulsion water to convey forward the ore at the same time that it lifts it. The concentrates pass out at the tail end through two gate and dam discharges to a compartment below, from which they are drawn periodically by a gate. The tailings flow with the water direct to another compartment below from which they are withdrawn by a bucket elevator, while the water flows around the side of the jig to the head end and is there drawn into the hutch through a

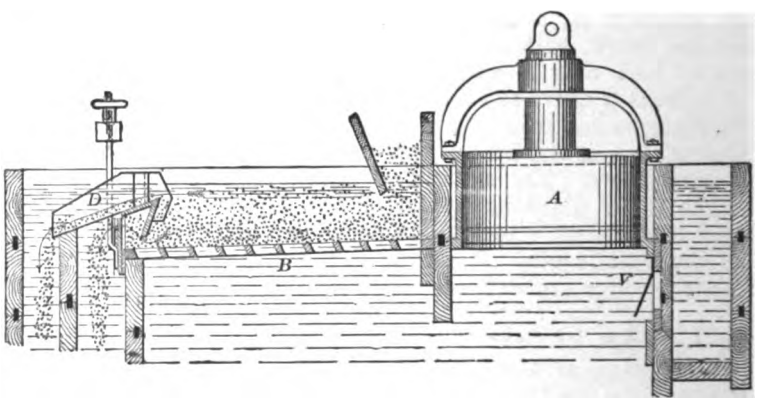

FIG. 313.—LONGITUDINAL VERTICAL SECTION OF McLANAHAN'S JIG AND TANK.

check valve *V* by the suction of the plunger. It is, therefore, a true pulsion jig. Four sieves are generally mounted in one tank.

§ 390. Circular Jigs.—The Bilharz circular plunger jig uses direct eccentric motion. It is designed for slimes. This has a circular jigging tank with an annular sieve 2.35 m. outside diameter and a central plunger 0.880 m. in diameter, and makes 180 strokes per minute. The hutch is cylindrical outside, while in its center is a truncated cone whose lower base is equal to the base of the cylinder. The ore is fed by a central distributor all around the inner circumference of the sieve, and tailings discharge around the outer circumference. It treats 12 to 14 tons (dry weight) of slime in 10 hours. The advantage of this form of jig is its compactness. The disadvantage is that a series of sieves for making a series of products is impossible. It does not seem to have found favor either in this country or in Europe.

R. Hunt[11] describes a form similar to the Bilharz, which he calls a slime or buddle jig. The outer diameter of its sieve is 9 feet, and of its plunger 3 feet. It has a sieve with 1½-mm. holes, and its bottom bed consists of ½-inch stuff, 3½ inches deep. For slime, with scarcely a sandy feel, the piston stroke should be about ½ inch and the number not less than 300 per minute. Its capacity is

nearly double that of a round buddle 25 feet in diameter and its tailings are cleaner. It uses 18 gallons of clear water per minute.

A circular jig was used, as jigs No. 6 and No. 7, in Mill 42, for re-treating tailings of the coarser classifier jigs; it, however, has been replaced by Collom jigs.

§ 391. THE BAUM JIG.—(See Fig. 314.)—This is an accelerated jig, used for coal. It has plunger compartment *A* and sieve compartment *B*, but substitutes for the plunger the action of compressed air directly upon the surface of the water. The return of the water is by gravity. This gives a pulsion of the desired strength with little or no suction. The admission and exhaust of compressed air is by a piston valve *a* operated by an eccentric. The valve is specially designed to give full opening during pulsion and an instant of closure between the close of admission and the opening of exhaust, during which the air can expand. The number of strokes per minute varies from 50 to 75 for coarse coal and 75 to 100 for fine. The air pressure is 40 to 50 pounds per square inch.

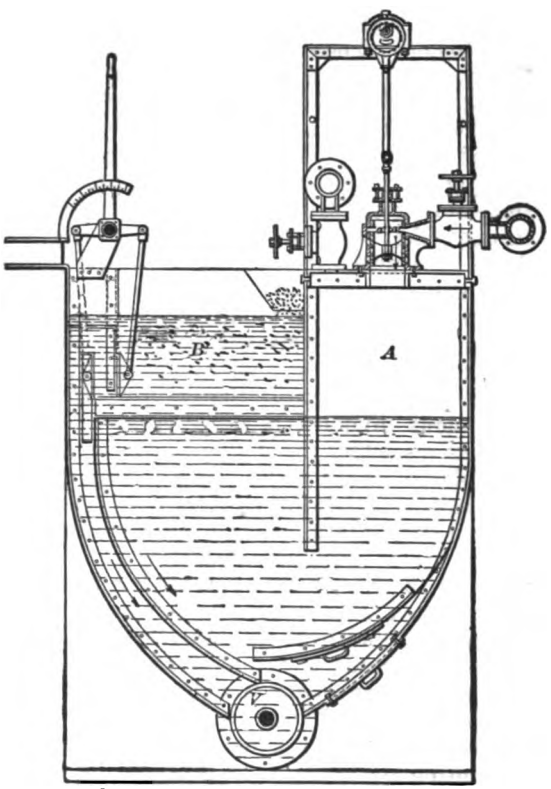

FIG. 314.—END VIEW OF THE BAUM JIG.

Its advantages are that the rise of water is accelerated during the whole stroke, and the amount of suction is small; its disadvantages are that the jig requires both pipes and shafts for its power connections, and the slow speed would be against it for use on ore in American mills.

§ 392. FRANCOU JIG.—This is an accelerated, steam jig which, instead of using an eccentric, has a nicely fitted piston and cylinder to impart the motion to the water, and the piston rod connects directly with a steam piston and cylinder above, which lifts the jigging piston, and allows it to fall by gravity. Additional weights are added as needed. The claim is constant pressure, so that if the jig bed is tight there is less action; if loose, more action. The author doubts the wisdom of this departure from the positive action of an eccentric, as the cost of running little engines distributed about a mill, is not an economical use of power.

HAND JIGS WITH FIXED SIEVES.—A fixed sieve jig run by hand has been tried in France for washing coal. Small testing jigs with fixed sieves and driven by hand, are used to some extent in this country and are described under Testing in Chapter XXI.

§ 393. THE UTSCH JIG is an accelerated, multi-sieve jig, each sieve having its own side plunger. The sieves each slope a little in the direction of motion of the ore and there is a slight drop from one to the next. Instead of having

the lightest portion pass from an earlier to a later sieve over a tail board, the heavier grains pass on beneath a gate. The jig is therefore re-treating the heavier product at each successive compartment, instead of the lighter, as is usual with jigs. The successive top layers are removed by devices working on the principle of the gate and dam discharge (see § 432), so arranged that the first shall take the lightest and the last the heaviest grains, and the others graded between. The machine is described as being tried at Ammeberg, Sweden, in competition with a Harz jig, and the latter proved slightly more advantageous, owing to its easier repairs and higher capacity. It is mentioned here simply to illustrate the principle.

§ 394. UNDER-PISTON JIGS.—In these jigs the whole bed is moved only during pulsion. These have a horizontal piston beneath the sieve oscillating vertically. Either the hydraulic water is admitted beneath the piston and passes up through check-valves in the piston, thereby cutting down suction, an instance of which is the machine described by Rittinger, or the hydraulic water is admitted above the piston and the latter has no check-valves; of this the Diescher coal jig is an instance used at the present day in this country. In both cases, the piston is constructed with a few small holes, so that any material that passes through the sieve can pass down through the piston continually or be drawn down intermittently. This form of jig guarantees an even pulsion all over the sieve and it is compact, but the plunger is not easily accessible.

Rittinger's jigging pump (*setzpumpe*) is an under-piston jig having a tight fitting piston with valves in it to let water up through, and valves below to prevent a backward flow, thereby making it a pulsion jig with no suction whatever.

§ 395. THE SIPHON SEPARATOR (*Heberwäsche*), used at Mechernich, is a continuous hindered settling washer. As shown in Figs. 315*a*-315*c* this apparatus resembles the deep pocket classifiers in having deep pits for concentration placed in the bottom of a conveying trough. It differs from those classifiers in having vertical sides to the pocket, in having the pocket and the sorting column one and the same, in having a restricted intermittent discharge from the spigot, and finally, as a result of all these, and a more conspicuous difference than all the rest, namely, in having the whole pocket filled with sand which is being sorted under hindered settling conditions, by a continuous upward current distributed over its whole area.

The apparatus is a tank made of boiler iron attached beneath, and by the side of the conveying trough *G*. The tank has two main compartments: *B*, the pocket, and *E* the water reservoir. At the bottom of the pocket *B* is a screen, *bb*, made as a flat hopper for admitting water from *E* to *B* and for preventing the sand in the pocket from finding its way into *E*. At the apex of this hopper-shaped sieve is a pipe *q*, venting into a launder *r*, with a plug *p*, to clear it out if it becomes clogged. This pipe *q*, has a plug *v*, which closes or opens it for the passage of sand or water. The hydraulic water is fed in through the cock *a*, into the small compartment *A* of the tank, the plunger stream being broken by the screen *u*; thence it flows up through *B*, doing the work of sorting. When the accumulation of heavy ore upon the sieve *b*, becomes so great as to hinder this current, the float *S*, in the little compartment *C*, rises and operates the lever *h*, on the pivot *i*, opening the plug *v*, by the rod *dv*, and thereby discharging the accumulation of concentrates. This act loosens the sand bed in *B*, relieves the pressure in *E*, allows the float *S*, and the plug *v*, to return to their places and the period of accumulation to start again. The two adjustments are the hydraulic water *a*, which regulates the amount of sorting, and the rod *f* of the float *S*, which causes the float to be lifted by little or much accumulation of concentrates, as may be desired. The apparatus may have one, two or three pockets, as desired.

An apparatus with three pockets, all of the size indicated in the figure, treats at Mechernich stuff from 5 mm. diameter downward, at the rate of 8 to 9

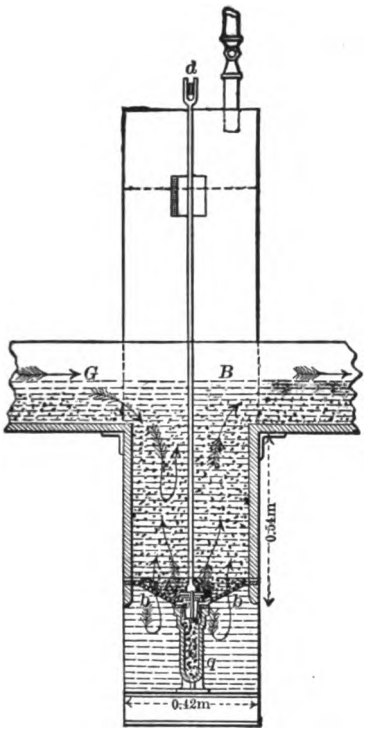

FIG. 315*a*.—SIDE VIEW OF THE SIPHON SEPARATOR, (*Heberwasche*).

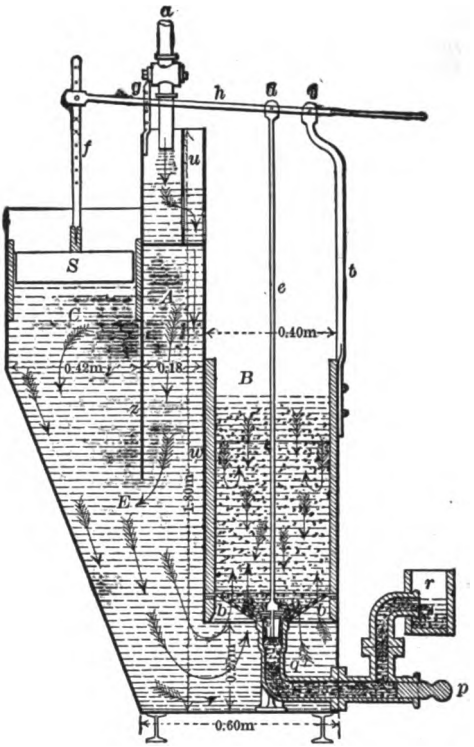

FIG. 315*b*.—END VIEW.

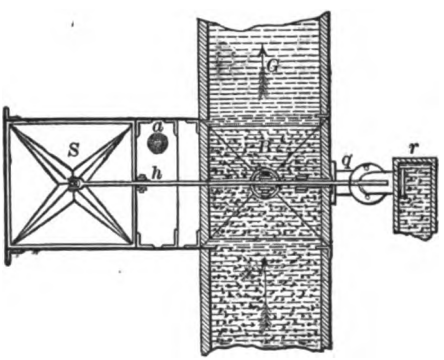

FIG. 315*c*.—PLAN.

cubic meters per hour (dry measure), or about 17 to 20 tons, and yields first spigot, galena nodules for stamps; second and third spigots to another washer,

and overflow to pointed boxes. The water used is 45 cubic meters per hour. In the washing and re-washing at these works, there are 124 of these used.

It has remarkably high capacity and low cost, and on material free from included grains, does work equal to a pulsion jig, that is to say, a jig which has no suction. It has not yet found its way into mills in the United States, but the position of the intermediary jig would be a natural place in which to try it.

General Considerations of Jigs.

The jigs just described represent leading types of good modern practice, together with others which are inserted simply to illustrate principles. Considerable variation is found in certain of the details and the engineer will welcome the opportunity to select from these. To meet this demand, the following remarks are made.

§ 396. Frames.—Wooden frames are generally used on the Harz, the sliding block and the crank arm jigs (see § 408 and § 409), to bind the jig tank together and to support the mechanism. There is one more set than there are sieves of the jigs. Each set consists of a cap, two posts, or three posts where two jigs are framed together back to back, and a sill, all notched and bolted together and further strengthened by horizontal tie rods. The dimensions of these pieces in some of the mills are shown in Table 269.

TABLE 269.—FRAMES AND TIE RODS.

Mill No.	Number of Sieves in Jig.	Size of Cap.	Size of Posts.	Size of Sill.	Number of Tie Rods Used per Set.	Diameter of Tie Rods.
		Inches.	Inches.	Inches.		Inches.
9	5	6x10	5x6	.....	.....	⅝
15 (coarse jig)	4	6x 8	4x6	6x6	4	⅝
15 (fine jig)	4	4x 6	(a) 3x4	4x4	3	⅝
18	4	6x 8	6x6	6x6	(c) None.	.....
30	2	6x 8	6x6	6x6	2	⅝
37	4	5½x7½	(b) 5x5½	5½x7½	2	⅝

(a) This jig has also a 2x4-inch post at either end of its longitudinal partition connected by two tie rods ⅝ inch in diameter. (b) In this mill two jigs are framed together so that each set has a third post, 3½x5½ inches (see Figs. 306a–306c). (c) The posts are very solidly mortised and bolted to the cap and sill, so that no tie bolts are used.

Cast-iron frames are sometimes in part substituted for wooden frames by putting iron standards upon all the cross partitions and on the two ends. They are bolted at the ends down to the sills below, and serve to support the eccentric shaft. While these are neater to look at and make the sieves more open and easy to approach, they do not furnish buckstaves for the tank. This deficiency is in part made up by several tie rods running through the cross partitions from side to side. The planks of the tank are too thin to support properly the standards. The author, however, is unable to quote a single instance of this being used on a Harz jig, although it has been noticed in a few instances on accelerated jigs.

§ 397. Materials for Jig Tanks.—Wood is the usual material. Soft wood is more commonly used than hard. It is generally put together with tongue and groove joints and is held together and supported by the frame. The thickness of planks used in most cases is 2½ or 3 inches; sometimes as low as 2 inches, or even less is found, but it is not to be recommended except for light work. The Cooley jig used in Southwest Missouri and in Mill 92, is built up of 2×4-inch soft pine planks spiked flat one upon the other, and dovetailed at the corners and partition joints.

Cast iron jig tanks for the Collom jigs (see Figs. 308a-308c), are used in Mills 44, 47 and 48. Charles J. Hodge's new jig and the Ferraris jig (see Fig.

330), used at Monteponi, Sardinia, both have cast iron tanks. Plate iron tanks are used in the Baum coal jig (see Fig. 314). The use of plate iron requires special care in riveting corners with angle iron, owing to the constant jar and racking action of the plunger movement. Mine waters are often acid and when they are used in the mill, frequent applications of paint are needed to protect the iron sufficiently to prevent its decay. The cutting off of forests is proceeding so rapidly that the use of cast iron or plate iron for jigs will probably increase.

§ 398. HUTCHES.—The development of the modern jig may thus be traced: The first continuous jig (Fig. 316), had a square tank and a longitudinal partition extending but little below the sieve. The bed was treated very unevenly; the inner part was too active, the outer too stagnant. Guide boards (Fig. 317), to catch and appropriate proportional amounts of pulsion for each part, improved it. A rounded, tubular tank (Fig. 318), improved it still more, but was costly. The inner cylindrical bend was replaced by a straight partition (Fig. 319), diminishing expense and still retaining the improved quality. The last two, however, were found to bank with sand to a hopper form, as indicated.

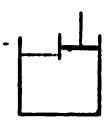
FIG. 316.

FIG. 317.

FIG. 318.

FIG. 319.

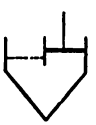
FIG. 320.

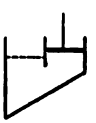
FIG. 321.

So the next step was to make the hopper of wood (Fig. 320), and at the same time the importance of elevating the sieve some distance above the bottom of the partition (see § 390), and of depressing the piston below the sieve (see §402), was recognized. Finally, the side hopper for discharging the hutch near the front margin (Fig. 321), was devised. This last appears to be the Harz jig of to-day, although there are many more of the regular hoppers still in use than of the side hoppers. A few of the cylindrical bottomed jigs also are still in use.

It should be said that the end parts of the hopper are generally used with the side parts, but they are left out of the cylindrical bottomed jigs. In case they are omitted, two spigots for each hutch should be used, as otherwise, sand banks will fill in and make sand hoppers. Mill 18, however, has side parts of the hopper only with but one spigot.

Mill 30 has a rectangular hutch with only an inclined partition extending from the spigot part way across the hutch.

Mill 22 has a side hopper with the rear angle between the sloping bottom and the vertical side replaced by a cylindrical surface, the center of the cylinder being at the bottom of the longitudinal partition. It is, in fact, a side hopper modified by a cylinder.

The Stutz coal jig has a false bottom or hutch with holes in it through which slime may settle to the true hutch below. This clarifies the hydraulic water which is used over and over again.

The slope of the hutches in a few of the mills is given in Table 270. In

TABLE 270.—SLOPE OF JIG HUTCHES.

Mill No.	Slope of Ends.	Slope of Sides.	Mill No.	Slope of Ends.	Slope of Sides.
	Degrees.	Degrees.		Degrees.	Degrees.
13	46	53	22 (two-sieve jig)	45	20
15 (coarse jig)	Vertical.	45	22 (Parsons)	43–59	55
15 (fine jig)	"	35	30	Vertical.	50
18	"	44	37 (coarse jig)	62	33 & 50
22 (three-sieve jig)	45	25	37 (fine jig) (a)	55	40 & 50

(a) See Figs. 306a–306c.

regard to the slope of hutches, it is probably true that a much smaller slope can be used safely in these than in classifiers without trouble from the material lodging on the sides, owing to the fact that the oscillations of the plunger water tend to move the grains on a slope, where without them, they would remain at rest. For example, in Mills 15 and 22, bottom slopes of 35° and 20° respectively are used. The author cannot state positively that sand does not lodge on these gentle slopes, but the jigs are doing good work and giving no trouble from plugging of hutch spigots.

§ 399. LONGITUDINAL PARTITION.—The depth of this partition below the sieve is a very important consideration. If not deep enough, the action is uneven upon the whole bed; the pulsion is too strong on the side next to the partition, too weak on the farther side; if too deep, unnecessary height and clumsiness are given to the jig. The depths in the mills, as shown in Table 271, range from 3 inches in Mill 20 up to 12 inches in Mills 9, 15, 22 and 37.

In Mill 38, 8 inches depth for a sieve 24 inches wide, that is to say, a ratio of 0.333, was found to be too little for the coarser sizes, but to work satisfactorily for the finer. Also for the Evans jig, with a sieve 18¾ inches wide, a partition 4 inches deep, or with a ratio of 0.213, was found to be too little and 8 inches, or a ratio of 0.427, was found to work well. In Mill 9 jigging ⅝-inch stuff, No. 1 jigs, 30 inches wide, have a depth of partition of 10 to 12 inches, or a ratio of 0.33 to 0.40, which is satisfactory. Mill 37 whose jigs have been taken by the author as standard, uses a ratio of at least 0.48 on all jigs. These facts seem to point to 0.4 as a ratio for coarse jigs and 0.33 for fine. These figures are to apply to the last sieve of a jig, since it is there that the depth of the partition is less than at any other point.

To illustrate the practice in the mills, the ratio has been computed from as many jigs as possible and they are given in Table 271. They show more or less irregularity, but as a rule, are above those advanced by the author.

TABLE 271.—CONSTRUCTION OF JIGS.

Mill No.	Jig No.	Kind.	Number of Sieves.	Sieve Box. Length in the Clear.	Sieve Box. Width in the Clear.	Drop between Screens. (a)	Height of Tail Board. (a)	Depth of Longitudinal Partition Below Sieve. (a)	Ratio of Depth of Partition to Width of Sieve. (a)
				Inches.	Inches	Inches.	Inches.	Inches.	
9	1	Harz.....	5	42	30	.....	6	10 to 12	0.33 to 0.40
	2	Harz.....	.....	42	24	.....	.....	10 to 12	0.42 to 0.50
10	1	Harz.....	5	36	24	2	7½	6	0.25
	2	Harz.....	6	36	24	2	6	6	0.25
12	4	Harz (b).....	4	30	14	.....	8	.....	.....
13	1 & 3	Collom	1	45	22	.....	5	.....	.....
	2	Collom	1	33	22	.....	5	.....	.....
14	1	Wendt.....	2	40	20	.....	8	.....	.....
	2	Wendt.....	2	40	20	.....	9	.....	.....
15	1 & 2	Harz.....	4	28	18	2	5	12	0.67
	3	Harz.....	4	28	18	2	4	12	0.67
	4	Harz.....	4	28	18	1¼	3½	12	0.67
	5	Harz.....	4	22½	12	¾	2	12	0.67
16	1	Sliding block..	1	46	17	.....	5	.....	.....
	2	Sliding block..	(c) 4	31	17	1½	4	.....	.....
	3	Harz.....	3	35	13	1½	4	.....	.....
17	1	Sliding block..	2	30	17	1½	4	.....	.....
	2 & 3	Sliding block..	4	30	17	1½	4	.....	.....
	4, 5 & 6	Harz.....	4	35	14	1½	3½	.....	.....
	7	Harz.....	3	32	14	1½	3	.....	.....
18	1	Harz.....	4	32	16½	1½	4, 3¼, 3, 3	8½	0.51
	2	Harz.....	4	32	16½	1¼	3¼, 3¼, 3¼, 3	8½	0.51
	3	Harz.....	4	32	16½	1¼	3½, 3, 2½, 3¼	8½	0.51
	4	Harz.....	4	32	16½	1¼	3½, 3, 3, 3½	8½	0.51
	5	Harz.....	4	32	16½	⅞	2⅞, 3, 3, 2½	8½	0.51
19	1, 2 & 6	Harz.....	3	.....	.....	.....	.....	.....	.....
	3 & 5	Harz.....	4	.....	.....	.....	.....	.....	.....
	4	Harz.....	3 & 4	.....	.....	.....	.....	.....	.....
20	1	Harz.....	3	30	17	2¼	2¼	3	0.18
	2 & 3	Harz.....	3	30	17	2¼	2	3	0.18
	4	Harz.....	3	30	17	2¼	1¾	3	0.18
	5	Harz.....	2	30	17	2¼	1¾	3	0.18

TABLE 271.—CONSTRUCTION OF JIGS.—*Continued.*

Mill No	Jig No.	Kind.	Number of Sieves.	Sieve Box. Length in the Clear.	Sieve Box. Width in the Clear.	Drop between Screens. (a)	Height of Tail Board. (a)	Depth of Longitudinal Partition Below Sieve. (a)	Ratio of Depth of Partition to Width of Sieve. (a)
				Inches.	Inches	Inches.	Inches.	Inches.	
21	1	Harz	3	22	17	2	3½	8	0.47
	2	Harz	4	22	17	2	3½	8	0.47
	3 & 4	Harz	4	22	17	2	3	8	0.47
	5	Harz	4	22	15½	1	2½	9	0.58
	6	Harz	2	27	21½	2	3	8	0.37
22	1	Harz	3	35	21½	1	5½	10	0.47
	2	Sliding block	2	30	18	1	5½	12	0.67
	3	(d)	2	30	18	1	5½	12	0.67
	4	Harz	3	36	14	1	5	10	0.71
	5	Harz	3	36	14	1	5, 5, 4½	10	0.71
23	1, 2 & 3	Harz	2	34	20	.....	.....	.....	.....
	4	Harz	1	34	20	.....	.....	.....	.....
	5 & 6	Harz	3	30	18	.....	.....	.....	.....
24	1	Crank arm	2	33½	16½	2½	4, 4¾	10½	0.64
	(e) 2	Crank arm	2	38	22	.....	4½, 4¼	(f) 11	0.50
	(e) 2	Crank arm	2	28½	16½	.....	4½, 4¼	(f) 10	0.61
	3	Crank arm	2	38	22	.....	4½, 4¼	(f) 11	0.50
	4	Parsons	2	37½	22	0	5¾, 4¼	.....	.....
	5	Harz	1	34	16	.....	4	6	0.38
	6	Harz	3	34	14	⅛, 1	2½, 2¾, 3	(f) 6½	0.46
25	1	Parsons	2	37	22	⅞	6, 6½	.....	.....
	2	Harz	3	33¼	15¾	1	5¼, 5¼, 5	6	0.38
	3	Harz	3	33¼	15¾	1	3, 3⅞, 3⅞	6	0.38
26	1	Harz	3	34	16	1½	4¼	8, 6½, 5	0.50, 0.41, 0.31
	2 & 3	Harz	3	34	16	1½	4	8, 6½, 5	0.50, 0.41, 0.31
	4 & 5	Harz	3	30	16	1½	4	8, 6½, 5	0.50, 0.41, 0.31
	6	Harz	2	30	16	1½	4	8, 6½	0.50, 0.41
27	1	Crank arm	2	26	16½	.....	6	.....	.....
	2	(g)	2	26	16	.....	5	.....	.....
	3 & 4	Crank arm	4	24	16	1½	4½	.....	.....
	5	(h)	4	24	16	1½	4½	.....	.....
	6	Harz	4	24	16	1½	3½	.....	.....
	7	Crank arm	4	24	16	1½	3½	.....	.....
	8	Harz	5	24	16	1½	(i)	.....	.....
	9	Harz	5	24	16	1½	3½	.....	.....
	10 & 11	Harz	5	24	16	1½	3	.....	.....
8	1	Crank arm	(j) 2	34	18	.....	5¾	5	0.28
	2	Crank arm	(j) 2	34	18	.....	4½	5	0.28
	3	Crank arm	4	29	18	1	4½	5	0.28
	4	Crank arm	4	29	18	1	5½	5	0.28
	5	Crank arm	4	29	18	1	4½	5	0.28
	6	Crank arm	4	29	18	1	4½	5	0.28
	7 & 8	Crank arm	4	29	18	1	3⅝	5	0.28
	9 & 11	Crank arm	5	29	18	1	3⅝	5	0.28
	10	Crank arm	5	29	18	1	3⅞	5	0.28
	12	Crank arm	5	29	18	1	3¾	5	0.28
29	1 to 5	Harz	4	33	21	.....	.....	.....	.....
30	1	Harz	3	32	18	2¼	6, 6, 6½	8	0.44
	2	Harz	3	32	18	2	6, 6, 6½	8	0.44
	3	Harz	3	32	18	1¾	5, 5, 5½	8	0.44
	4	Harz	3	28	16	1½	4½, 4½, 5	8	0.50
	5	Harz	3	28	16	1½	4½, 4½, 5	8	0.50
	6	Harz	3	32	18	1	4, 4¼, 4½	8	0.44
	7	Harz	4	28	16	¾	3¾, 4, 4, 4½	8	0.50
	8	Harz	4	28	16	¾	3½, 3¾, 3¾, 4	8	0.50
31	1	Sliding block	2	36	18	1½	5	.....	.....
	2	Harz	2	34	16	1½	5	.....	.....
	3	Harz	2	34	16	1½	4½	.....	.....
	4	Harz	4	34	16	1½	4	.....	.....
	5	Harz	4	34	16	1½	3½	.....	.....
	6	Harz	4	34	16	1½	3	.....	.....
	7	Harz	4	34	16	1½	3¼	.....	.....
	8, 9, 10 & 11	Harz	4	34	16	1½	3	.....	.....
32	1	Harz	2	32	22	3	5	.....	.....
	2, 3 & 4	Harz	4	34	20	2, 1½, 1½	4½	.....	.....
	5 & 6	Harz	4	33½	20	1½, 1½, 1½	4	.....	.....
	7	Harz	4	30½	20	1½, 1½, 1½	4	.....	.....
	8, 9 & 10	Harz	4	34	20	1½, 1½, 1½	4	.....	.....
33	1	Harz	3	34	16½	.....	4½	.....	.....
	2 & 3	Harz	3	34	16½	.....	.....	.....	.....
	4	Harz	4	34	16½	.....	.....	.....	.....
	5	Harz	4	34	16½	.....	3¼	.....	.....
34	1, 2, 3 & 4	Harz	3	35	20	.....	.....	.....	.....
	5, 6, 7, 8 & 9	Harz	4	24	18	.....	.....	.....	.....
35	1	Harz	3	34	18	2½	5	.....	.....
	2	Harz	3	34	18	2	5	.....	.....
	3	Harz	3	34	18	1½	4½	.....	.....
	4	Harz	3	34	18	1½	3	.....	.....
	5, 6, 7 & 8	Collom	3	34	22	.....	3½	.....	.....
	9, 10 & 11	Harz	3	34	18	1½	2½	.....	.....
36	1	Harz	2	32	16	.....	4	.....	.....

Digitized by Google

TABLE 271.—CONSTRUCTION OF JIGS.—*Continued.*

Mill No.	Jig No.	Kind.	Number of Sieves.	Sieve Box. Length in the Clear.	Sieve Box. Width in the Clear.	Drop between Screens. (*a*)	Height of Tail Board (*a*)	Depth of Longitudinal Partition Below Sieve. (*a*)	Ratio of Depth of Partition to Width of Sieve. (*a*)
				Inches.	Inches	Inches.	Inches.	Inches.	
36	2, 3 & 4	Harz	4	32	16				
	5	Harz	4	32	16		3		
37	1	Sliding block	2	33¼	21¼	1	4	10½	0.48
	2 to 13	Harz	4	33½	15½	1	4	12, 11, 10, 9	0.73, 0.67, 0.61, 0.56
38	1	Harz	1	39½	21½		6½		
	2	Harz	2	36	24	3	4½		
	3 & 4	Evans (*k*)	2	38¾	18¾	2	3½		
	5 to 12	Evans (*k*)	2	38¾	18¾	3½	3½		
	13 & 14	Harz	3	36	24	2	3½		
	15 & 16	Harz	2	36	24				
	17 & 18	Harz	3	36	24				
39	1 & 2	Harz	1	48	24		4		
	3	Harz	1	30	17		4		
	4	Harz	3	31	15		4		
	5 & 6	Harz	3	31	15	2	4		
	7 & 8	Harz	4	31	15	1½	4		
	9	Harz	4	30	17½	1½	4		
	10	Harz	4	30	22	1½	4		
40	1	Harz	1						
	2, 3, 4, 5 & 6	Harz	3	35	23	2½	4	10, 7½, 5	0.29, 0.21, 0.14
41	1	Harz	2	30	18	2½	4½		
	2, 3 & 4	Harz	3	30	18	2½	4½		
	5	Harz	4	30	18	2	4½		
	6, 7 & 8	Harz	4	30	18	1½	4		
	9	Harz	3	30	18	2½	4½		
	10	Harz	3	30	24	2	4½		
	11 & 12	Harz	3	34	14	1½	4		
42	1	Harz	1	27	17		4		
	2 to 17	Collom	2	34	22		3½		
43	1	Harz	1	42	24				
	2 & 3	(*k*)	2	34½	22½		4½		
	4, 5, 6 & 7	(*k*)	2	34½	22½		4		
	8	Harz	3	34	20		4½		
	9	Harz	3	34	20		4		
44	1	(*l*)	1	36	24		4½		
	2	Collom	2	34	22		2⅝, 2½		
	3 & 4	Collom	2	34	22		2⅝		
	5	Collom	2	34	22		2½, 2⅝		
	6	Collom	3	34	22		2⅝		
	7	Collom	3	34	22		3, 2⅝, 2¼		
	8	Collom	3	34	22		2½, 2⅞, 3⅛		
	9	Collom	3	34	22		2¾, 2⅝, 2½		
	10	Collom	1	34	22		2⅝		
	11	Collom	2	34	22				
	12	Collom	3	34	22		2⅝, 2, 2⅝		
	13	Collom	3	34	22		2⅝, 2¼, 2⅛		
	14	Collom	3	34	22		2⅝, 2¼, 2½		
	15	Collom	1	34	22				
45	1, 2 & 3	Collom	2	34	22				
	4 & 5	Collom	3	34	22				
	6	Collom	1	34	22				
46	1 & 2	Collom	2	34	22		3		
	3	Collom	2	34	22		2⅞		
	4 & 5	Collom	2	34	22		2¾		
	6	Collom	2	34	22		2¾		
	7 & 8	Collom	3	34	22		2¾		
	9 & 10	Collom	3	34	22		2¾		
	11 & 12	Collom	3	34	22		2½		
47	1	(*l*)	1	34	22		4½		
	2, 3, 4 & 5	Collom	2	34	22		2½		
	6, 7, 8 & 9	Collom	3	34	22		2½		
48	1	Collom	2	34	22		3		
	2	Collom	2	34	22		2⅞, 2¾		
	3	Collom	2	34	22		2¾		
	4	Collom	2	34	22		2¾, 2⅝		
	5	Collom	3	34	22		2¾		
	6 & 7	Collom	3	34	22		2⅝		
	8	Collom	3	34	22		2½		
85	1	Harz	2	27	18		3		
	2 & 3	Harz	3	27	18				
86	1	Harz	3	32	16	2½	3		
	2	Harz	3	32	16	2	3½		
	3	Harz	3	32	16	1½	4		
	4	Harz	3	32	16	1¼	4		
87	1, 2, 3, 4 & 5	Harz	3	32	15½		3½		
	6	Harz	4	34	16		3		
88	1 & 2	Harz	4	31	16		3½		
	3	Harz	4	31	16		3½, 4, 4, 4		
	4	Harz	3	32½	15½		3¾, 3¾, 3½		
	5	Harz	3	32½	15½		4		

TABLE 271.—CONSTRUCTION OF JIGS.—*Continued.*

Mill No.	Jig No.	Kind.	Number of Sieves.	Sieve Box. Length in the Clear.	Sieve Box. Width in the Clear.	Drop between Screens. (a)	Height of Tail Board. (a)	Depth of Longitudinal Partition Below Sieve. (a)	Ratio of Depth of Partition to Width of Sieve. (a)
				Inches.	Inches	Inches.	Inches.	Inches.	
38	6	Harz.....	3	32½	15½	.....	4½, 4½, 4	.....	.....
39	1	Harz.....	4	36	24	1	.....	.....	.....
	2	Harz.....	4	30	20	1	.....	.....	.....
	3	Harz.....	3	24	12	1	.....	.....	.....
	4a & 4b	Harz.....	2	24	12	1	.....	.....	.....

(a) Where two or more values are given they are for the different compartments of the jig taken in order from the first sieve to the last. (b) A Spilsbury jig, which is of the Harz type. (c) This jig is really two jigs placed head to head, each having two sieves; two sieves treat 10 to 5-mm. stuff and two sieves treat 5 to 2-mm. stuff. (d) There are three Harz jigs and one sliding block. (e) For No. 2 jigs there is one large jig and two small jigs; the latter were made by rearranging a four-sieve jig so that ore is fed at the middle cross dam and flows both ways. (f) This is the depth below the first sieve. (g) There is one crank arm (not used) and one Harz. (h) There is one crank arm and one Harz. (i) Graduated from 4½ inches on first sieve to 4 inches on last sieve. (j) Each jig is practically the same as two one-sieve jigs, the stuff being fed at the middle cross partition and going both ways. (k) A modified Collom jig (see § 387). (l) The plunger is forced down by a cam and lifted by a spring.

The space for the plunger current, even when the hutch product is present before being drawn off, should at no point be less in area of section than the area of the plunger. This is a good rule and in accordance with the principles of hydraulics. There are, however, many jigs which violate it more or less and yet are doing work which is regarded as satisfactory. For example, there are 4,500 or more Collom jig sieves at Lake Superior, in all of which the plunger water has to go through a hole that is but little more than one-quarter the area of the plunger.

§ 400. THE LININGS.—These are to take the wear on the plunger side and to provide for holding the sieve in place on the jigging side. They are made almost invariably of wood. The No. 1 and No. 2 jigs of Mill 39, however, have their plunger compartments lined with iron. In Mill 30, the grain of the wood in the plunger lining is vertical which seems the logical arrangement. The lining on the sieve compartment is generally 1 inch thick and is interrupted or divided into two parts by the sieve frame. The lower part forms the ledge upon which the sieve frame rests, while the upper serves as a cleat to hold down the sieve frame. The importance of these linings in giving smooth sides to the sieve compartment cannot be emphasized too much. The under lining should reach down so far that all irregular currents are broken up before they reach the sieve. To the bottom of the longitudinal partition is probably deep enough. To insure this result, the inside of the sieve frame should be flush with the lining above and below. The jig, under the best conditions will have a dead margin all around, due to friction on the sides, but this precaution will reduce it to a minimum.

§ 401. SPIGOTS for continuous discharge of the hutch products are found in a great variety of forms. Most of those used for hydraulic classifiers (see § 296), may be used on jigs. The use of the rising discharge on fixed sieve jigs, however, is not known to the author.

The author is of the opinion that there is no better spigot than the pipe and plug, which is probably the most common. It has the advantages that it yields a full, round orifice at all times; that it can be cleared in an instant if plugged; that it can be replaced in an instant by the next size larger or smaller, if found too small or too large; that it is inexpensive and easily replaced when worn out; that the attendant is not tempted to be adjusting this discharge, which should be kept constant to avoid deranging the action of the jig. This form cannot, however, be stopped or opened by a handle from above, but must be tended by hand.

The size of the spigot will be ¼-inch pipe for the fine jigs. Occasionally ⅛-inch pipe has been used successfully and the advantage of lessened water obtained. In Mill 24, No. 1 jig has a ⅜-inch spigot; in Mill 25, No. 3 jig has a ¼-inch spigot. At Mill 31, adjustable triangular gate spigots are used which maintain an equilateral opening. Mill 26 uses common molasses spigots on its jigs.

When coarse jigs discharge their whole product through the sieve, a continuously running spigot large enough to discharge the grains without choking uses an excessive amount of water and some intermittent device is needed; for example, a large pipe nipple, 1½ inches, 2 inches or more in diameter, with a wooden plug is used. At Clausthal and other works an inside conical plug is used, which is lifted by a rod coming up through the central partition to a lever, and operated from time to time by hand (see Fig. 337).

In Mill 13, using modified Collom jigs, where material in the hutch has passed through sieves with holes 1¾ inches, ¾ inch and ¼ inch in diameter respectively, pipes *A* are used against the flanged ends *B* of which covers *C* are held with weighted levers *D* (see Fig. 322). The diameters of the pipes for the above three products are 6 inches, 2 inches and 6 inches respectively. The products are discharged upon the floor below the jigs, the jig being stopped in the meantime. The discharging covers are opened by handles *E* upon the jigging floor.

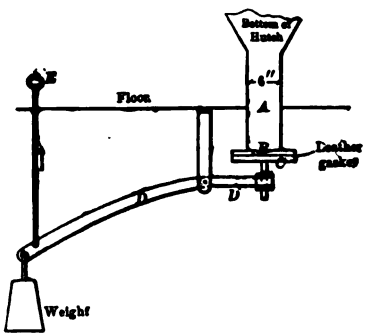

FIG. 322.—SPIGOT AT MILL 13.

§ 402. THE PLUNGER is generally made of practically the same size as the sieve except in jigs of the Collom type. This may seem at first sight a useless enlargement of the machine, but theoretically it is the best practice, as, in hydraulics, for even work, uniform velocity of water should be maintained at all parts of a stream. Where the plunger is smaller than the sieve it must have a longer stroke to do the same work, and give, therefore, a higher velocity to the water, and this high speed current is liable to reach some portion of the sieve before it is slowed down to the average speed, causing violent boiling of that portion of the whole bed, while other portions are too stagnant and dead.

Of the mills visited 10, 12, 15, 16, 17, 20, 22, 23, 26, 27, 30, 85, 87, 88 and 92 have all their jigs with the plunger the same size as the sieve. In addition to these are the following: Mill 9, No. 1 jig; Mill 21, all the jigs except No. 6; Mill 24, two of the No. 2 jigs and Nos. 5 and 6 jigs; Mill 25, Nos. 2 and 3 jigs; Mill 32, Nos. 5 to 10 jigs; Mill 42, No. 1 jig.

TABLE 272.—SIZES OF SIEVES AND PLUNGERS.

Mill No.	Jig No.	Size of Sieve Compartment.	Size of Plunger Compartment.	Percent Plunger Area is of Sieve Area.
		Inches.	Inches.	%
9.....	2	42x24	42x25	104.2
18.....	All.	32x16½	32x12	72.7
21	6	27x21½	27x18	88.7
24.....	1	33½x16½	33½x16	97.0
	2 and 3	33x22	33x18	81.8
28.....	1 and 2	34x18	30x16	88.2
	3 to 12	29x18	25x18	86.2
29.....	2, 3 and 4	34x20	34x16	90.0
37.....	1	33½x21½	34½x23½	109.9
	2 to 13	33½x15½	34½x14½	96.3
40.....	All.	35x23	33x16	75.5
86.....	All.	32x16	34x18	119.5

The jigs, except those of the Collom type, which have sieves of different size from these are given in Table 272. The table shows that the plunger area in no case is less than three-fourths of the sieve area in the most of the mills. In Mills 9 and 86 the plunger is slightly larger than the sieve. In the Collom jig and its modifications, as well as in the Parsons jig, the area is ½ or less, as shown in Table 273.

TABLE 273.—SIZES OF SIEVES AND PLUNGERS.

Mill No.	Jig No.	Kind of Jig.	Size of Sieve Compartment.	Size of Plunger Compartment.	Percent Plunger Area is of Sieve Area.
			Inches.	Inches.	%
13	1 and 3	Collom	45x22	22x22	48.9
	2	Collom	33x22	16x22	48.5
24	4	Parsons (a)	37½x22	15⅝ diameter.	22.5
25	1	Parsons (a)	37x22	15 diameter.	21.7
38	3 to 12	Evans	38¾x18¾	19¾x18¾	50.0
42	2 to 17	Collom	34x22	15x22	44.1
44	1	Cam driven, spring return.	36x24	34x10	39.4
47	1	Cam driven, spring return.	34x22	34x11	50.0
44	2 to 15	Collom	34x22	16x22	47.1
45	All.				
46	All.				
47	2 to 9				
48	All.				

(a) This jig is not a side-plunger jig, strictly speaking.

Side plunger jigs have been constructed in which one plunger served for two sieves, one on each side of it, thereby making the sieve area double the plunger area. This arrangement, however, is open to the objection that it is poorly regulated, that is to say, if the whole bed is lighter on one sieve than on the other, the lighter whole bed will absorb greater pulsion, where it really needs less than the other.

The height of the walls of the plunger box are sufficient to prevent water from escaping. The cover placed over the compartment restrains the swash due to waves.

It is important that the upper face of the plunger should never be high enough to suck air and give the resulting pounding motion. For this purpose, a safe rule is that the top of the plunger should never, even at the top of the stroke, be above the level of the sieve.

In regard to the construction of the plunger, all practice agrees that to prevent warping and twisting, the plunger should be made of several parts, preferably an odd number, and made of wood, with the grain running lengthwise on the outside layers and at right angles on alternate pieces. The top and bottom parts, where three are used, or the top, middle and bottom, where five are used, are of the full size; the other parts of about 1 inch smaller length and width, to give one or two rings, respectively, of water packing. Linkenbach recommends plungers with no water packing rings, but has the sides of the coarse jig plunger rounded to suit the eccentricity.

§ 403. Clearance of the Plunger and its Attachment to the Connecting Rods.—The clearance is the space between the edges of the plunger and walls of the compartment in which it moves. A space is needed to provide for any slight swelling of the wood and for dirt in the water, so that the plunger shall not lose power by friction, or cause wear on the lining. Since the plunger is usually driven by an eccentric without a cross head, the rocking motion will require either an increased clearance or a rounding of the side of the plunger. The latter may easily be done on a five-part plunger with two rings of water packing, by making the center part slightly larger than the top and bottom parts.

The clearance required for the rocking motion is comparatively little; for example, with a plunger rod 48 inches long, a plunger 5 inches thick and a throw of 2 inches, the total side clearance is 0.2 inch, or 0.1 inch on each side, or if it is gained by rounding top and bottom it would only be 0.05 inch shaved off from the two top and bottom edges of the sides, leaving the center width unaffected. More clearance will be required when the hutch water is fed above the plunger than when fed below.

It should be said that as clearance increases, the action of the piston becomes less and less positive; for example, a jig with a heavy, tight, whole bed, will be less moved by a loose than by a tight-fitting plunger. The mill man who has a loose-fitting plunger overcomes this difficulty by giving it more movement. The advantage of a tight-fitting plunger is in the fact that it will recover quickly if overfed with heavy material, while the loose plunger will not, because the attendant would not be likely to give it the momentary added throw required.

Mill 37 has a clearance of about $\frac{1}{8}$ inch all around (see Fig. 306*b*). Mill 30 uses $\frac{1}{4}$-inch clearance all around the plunger, and the blende jigs of Southwest Missouri are reported to have the same clearance. Rittinger recommends for under-piston jigs, without rocking motion, a clearance of $\frac{1}{20}$ to $\frac{1}{10}$ inch all around. Vezin holds that $\frac{1}{16}$-inch clearance all around, which on a piston 18×36 inches yields an area of 6.75 square inches or 1.04% of the piston area, usually furnishes sufficient area for the passage of the water and for other purposes. Kunhardt, (1884), says that jig plungers in Europe have $\frac{1}{2}$ inch of play on all their vertical sides.

The attachment of the plunger to the rods differs somewhat. They all have wide washers above and below. They occasionally have a shoulder on the rod above and nut below, as in Mill 37 (Fig. 306*c*), but generally have nuts both above and below which admit of adjustment of the plunger up and down.

Mill 30 has lock nuts above and below. Mill 18 has one nut above and lock nuts below, and Mill 15 has lock nuts above and one nut below. The author is inclined to favor the first of the three.

§ 404. Connecting Rods.—The common practice is to use one connecting rod, running from the eccentric to the center of each plunger. This is screwed into a boss *G* on the lower side of the eccentric strap *F* with a lock nut *H* set up against the boss (see Figs. 323*a* and 323*b*), or the eccentric strap has an extension downward (see Fig. 306*c*) of two rods and a cross bar. The eccentric rod is held to this cross bar by nuts above and below it.

In exceptional cases, where the plunger is very long, two rods are used; for example, on some of the 30×42-inch blende jigs in Southwest Missouri, also at Przibram. On jigs of the accelerated types, the use of two rods is more common, as on the Wendt jig of Mill 14 and others. On coal jigs which usually have large sieves, it is the rule to use two rods.

In one Colorado mill a double Harz jig is used in which two adjacent plungers are driven by only one shaft and eccentric (see Fig. 324). The sieves are $15\frac{1}{2}$ inches wide by 31 inches long; the plungers are $9\frac{1}{2}$ inches wide by 31 inches long. The disadvantage is that the two adjacent plungers must have the same throw, but this may not be serious, as the hydraulic water can equalize the matter.

The plunger receives a rocking motion from the eccentric from the absence of a cross head. This has been claimed by some authorities to injure the evenness of the current upon the sieve, but others think this effect is so small that it can be neglected. To do away with the rocking motion of the plunger at Przibram, a hinged plunger rod, the lower part of which runs in guides, is used. In the Diescher coal jig the arrangement is similar except that the guides are done away with and a horizontal arm with one end attached to the hinged

joint and the other end pivoted to the frame, makes the line of motion of the plunger practically vertical. At Clausthal the plunger rod is actuated by a short rocking arm, and this again by a long rocking arm, the two arms being pivoted on the same shaft. The long arm is oscillated by a crank and connecting rod. The rectilinear motion of the Collom jig and some of its modifications, has already been described (see §§ 386 and 387). In jigs with the crank arm and sliding block mechanisms the motion is practically rectilinear, owing to the fact that the eccentric or plunger arm, as the case may be, generally rocks back and forth over a small arc, instead of making a complete revolution.

§ 405. THE ECCENTRIC.—This must have the right throw to suit the work the jig is called upon to do, and as the work varies from time to time, the eccentrics must be adjustable. The eccentric should have a graduated scale to show at once the amount of throw at which it is set. The eccentricity, to meet all emergencies, must be greater than that which is likely to be called for. It will be greater for the

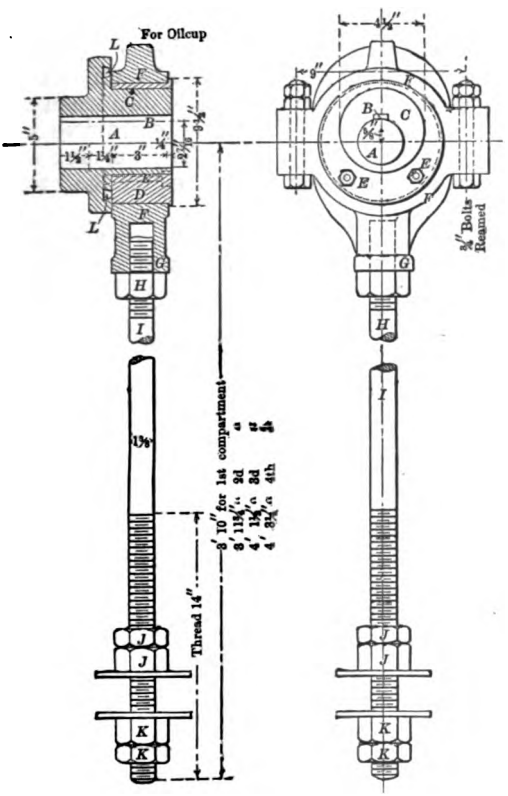

FIG. 323*b*.—SECTION. FIG. 323*a*.—ECCENTRIC AND CONNECTING ROD IN MILL 30. ELEVATION.

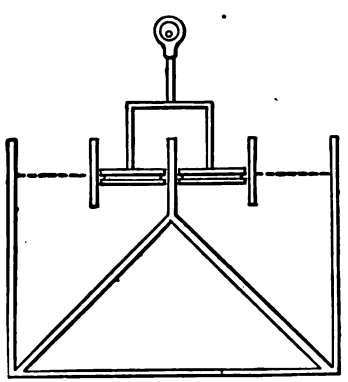

FIG. 324.—DOUBLE JIG WITH ONE SHAFT.

coarse products and less for the fine. For further discussion, see §§ 451 and 452.

Many different designs for making this adjustment have been made. In Mill 37 there are two eccentrics (see Figs. 306*d*-306*g*), one outside the other. The inner eccentric *n* fits upon the shaft and is attached to it by two set screws *p*. The outer *r* fits upon the eccentric surface of the inner and is adjustable in any position by a split collar and bolt *s*. The strap *t* slides upon the surface of the outer eccentric and conveys the movement through the rod to the plunger. The eccentricity of each is ½ inch and the throw of each is 1 inch. The relative position of the outer eccentric upon the inner causes the throws of the two to add to or subtract from each other, so that the throw may be varied from 0

to 2 inches. A pointer *u* on the inner eccentric, indicating by graduations on the outer, serves to set the machine at any given throw.

Mill 30 (see Figs. 323*a* and 323*b*), has a flanged eccentric wheel *C* with an eccentricity of $\frac{5}{8}$ inch, keyed to the shaft *A* at *B*. Fitted to the outer surface of this is a second eccentric wheel *D* also with eccentricity of $\frac{5}{8}$ inch and capable of being set in any position on the first, at which position it is held by two bolts *E* of which the heads take hold in a dovetail groove *L* in the flange. This combination allows a variation in the eccentricity from 0 to $1\frac{1}{4}$ inches, or in the throw from 0 to $2\frac{1}{2}$ inches.

A form commonly used, consists of a concentric disc keyed to the shaft with an eccentric disc held to its face by two bolts, one of which serves as a hinge for the eccentric disc to swing upon, while the other holds the eccentric disc when it has been swung off center to any desired throw. The eccentric disc requires in it two slots, one for the shaft, the other for the second bolt. The amount of throw is graduated on the edge of the eccentric disc with a pointer on the concentric disc and can be easily read.

Ferraris has designed an adjustable eccentric with a positive set to avoid the possible slipping by the clamp forms just described. It consists of an inner eccentric with a flange and an outer eccentric on the inner. The two throws are capable of adding to or subtracting from each other, as those in Mills 30 and 37. In the outer eccentric there are five holes and in the flange of the inner eccentric are six holes which bear vernier relation to those in the outer. By passing a bolt through only one hole in the outer eccentric and through any one of the holes in the inner, six different throws may be obtained, say 10, 20, 30, 40, 50 or 60 mm. By using also any one of the other four holes in the outer eccentric the difference between throws may be cut down to 2 mm. and the device will thus have a positive set for throws varying by 2-mm. intervals from 0 to 60 mm.

Habermann[54] has enumerated a great variety of different forms, to which the reader is referred.

In regard to the relative position of the eccentrics on the shaft, the almost universal practice is to set the eccentrics on the shaft so that all the pulsions on the several sieves take place approximately at the same instant. In Mill 30, No. 1 jig, with three sieves, has its eccentrics placed at 120° with each other, dividing the circle into three parts. The author has no record in regard to the other jigs of this mill. At the Breinigerberg mine at Stolberg, a four-sieve jig has the pulsions of contiguous sieves at 90° with each other. While the scheme illustrated in these two instances is undoubtedly a better distribution of power, it is doubtful if it does as good jigging as where the plungers act together. Pulsion is the first act of jigging; suction is the second, and it would seem to be better to feed No. 2 sieve during its pulsion rather than during its suction. This is probably better done with the eccentrics working together, or with No. 1 slightly anticipating No. 2, than when No. 1 is at 90° or 120° in advance of No. 2.

§ 406. Shaft and Pulleys.—There is generally one shaft running the whole length of the jig, which is supported upon boxes resting upon the timber frames, or more rarely upon special pedestal castings. The Cooley jig has two shafts for its seven sieves on the finishing jig used in Southwest Missouri. One drives the first four plungers at 200 revolutions; the other drives the last three plungers at 300 revolutions per minute. The diameter of the shaft varies from $2\frac{7}{16}$ to 3 inches, as shown in Table 274.

It is usual to drive jigs by tight and loose pulleys to avoid the interference which would otherwise result from the stops which are needed for skimming, adjustment or repairs. Where the use of the jig upon a given product is still in experimental condition, step pulleys for two or more speeds may be used to

give quickly the desired change in speed. Cone pulleys are sometimes used for this same purpose. When, however, the most favorable speed has been determined, it is better, for simplicity, to use one size only of pulley for each jig.

TABLE 274.—DIAMETERS OF SHAFTS.

Mill No.	Diameter of Shaft. Inches.	Number of Plungers Driven from the Shaft.
9	3	5
15	$2\frac{1}{16}$	4
18	$2\frac{11}{16}$	4
22	$2\frac{7}{16}$	2
27	$2\frac{11}{16}$	4
30	$2\frac{7}{16}$	2
37 (coarse jig)	$2\frac{11}{16}$	2
37 (fine jig)	$2\frac{7}{16}$	4

§ 407. ACCELERATED MECHANISMS.—The early idea of jigging, as stated by Rittinger and others, was to have the whole bed lifted on the down stroke of the plunger, while on the up stroke it was allowed to settle back again in as nearly as possible still water. One of the methods of reducing suction in order to partially attain this end, has been by accelerated, or, as they are sometimes called, slow return mechanisms; that is, mechanisms which give a quick upward motion of the water through the whole bed on the down stroke, and a slow return of the water on the up stroke. They are used to-day to some extent, especially on coarse jigs, the prevailing idea being that on fine jigs, which are run with a short stroke and a high number of strokes per minute, the difference between the accelerated mechanism and the ordinary eccentric is so slight as to cause no appreciable difference in the separation, and the added complications of the former render it objectionable. There are several ways of producing this acceleration, the most important of which will now be described.

§ 408. *Sliding Block Mechanism* (see Figs. 325*a*-325*c*), is a device for giving a rapid movement to the plunger during pulsion and a slow movement

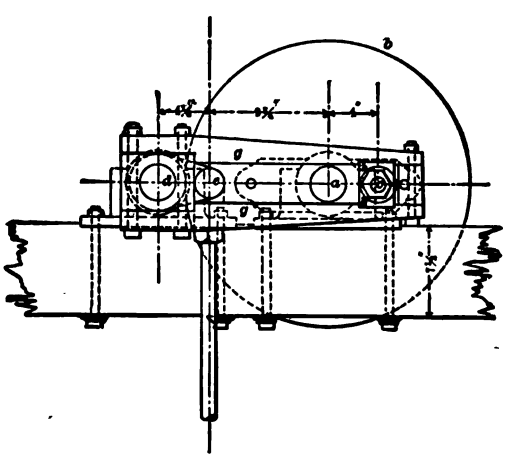

FIG. 325*a*.—END VIEW OF SLIDING BLOCK MECHANISM AT MILL 30.

during suction or return. It consists of a driving shaft *a* driven by the pulley *b* and driving the crank *c*; a plunger shaft *d* with short arms *e* driving the plunger *f*. Attached to the plunger shaft *d* is a slotted arm *g* with a sliding block *h* which connectes the crank pin *c* with the slotted arm *g*, and as the crank *c* revolves, the block *h* slides in the slotted arm and causes the latter to move over

a space which has i for its highest position and j for its lowest. This distance is traversed on the down stroke while c moves from c_4 to c_2 by way of c_3, which is a short arc. The return stroke is brought about while c moves from c_2 by way of c_1 to c_4, which is a long arc. It follows that the downward pulsion transmitted to f is rapid, while the upward return is slow. The relative difference between these speeds may be increased by increasing the radius of c, or by bringing a nearer to d.

The design used in Mill 37 has 14 inches between centers and 4 inches radius of driving crank. This gives a variation on the slotted arm of acting radius from 10 to 18 inches in length, and the period of descent is 40.7% of the time of the

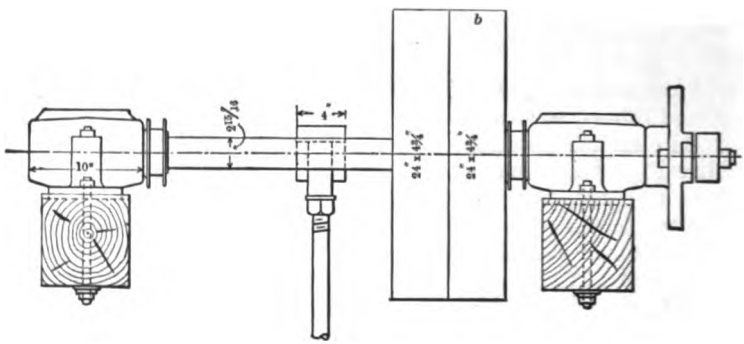

FIG. 325*b*.—SIDE VIEW.

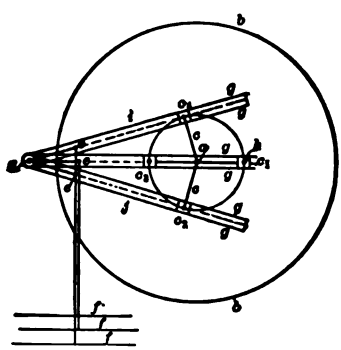

FIG. 325*c*.—SKELETON OF MECHANISM.

whole stroke, and of ascent 59.3%. The highest velocity in the middle of the down stroke is 1.8 times the velocity at the middle of the up stroke.

This device is used in Mills 16, 17, 22, 31 and 37, upon only the coarse jigs, the plain eccentric being used on the fine jigs.

The adjustment of the amount of stroke is obtained by lengthening or shortening the driving radius, the crank pin moving in a slot on its crank. The details of this mechanism in the mills are given in Table 275.

TABLE 275.—SLIDING BLOCK MECHANISM.

Mill No.	Jig No.	Radius of Driving Arm. Inches.	Distance Between Centers of Shafts. Inches.	Radius of Plunger Arm. Inches.	Ratio of Maximum Velocities of Down and Up Stroke.	Ratio of Times, Up to Down Stroke.
16.....	1	3	14	5¼	1.545	1.22
16.....	2	3	14	4	1.545	1.22
...	2	⅞	10⅛	.....	1.19	1.13
.	1 and 2	4	14	4¼	1.8	1.45

The advantages of the sliding block mechanism as compared with the plain eccentric are, that it gives with the same number and length of stroke a much quieter suction, which has less tendency to blind up the sieve and to felt together the sand into a hard cake. It gives also a parallel action of the plunger, while the plain eccentric gives a rocking motion faster on one side than on the other. Mill 31 finds after running the two jigs side by side that the sliding block keeps the whole bed more free. Mill 39, after trying both jigs, thinks that, while the sliding block gives a better action on the plunger, the extra cost more than offsets the advantage. The extent of the bearing surfaces exposed to the dust in the mill, forms a serious objection to the sliding block mechanism.

§ 409. *Crank Arm Mechanism.*—This is what is called in mechanism a four-bar linkage. As shown in Fig. 326*a*, it consists of a revolving driving shaft *a* from which the driven shaft *d* imparts to an eccentric a motion of oscillation which it receives through the crank *ab*, the connecting rod *bc*, and the crank *cd*. To better illustrate the character of the motion, the skeleton (Fig. 326*b*), has been constructed showing 9 different positions of the two cranks and connecting rod. From this it will be seen that the driven crank is given a quick motion

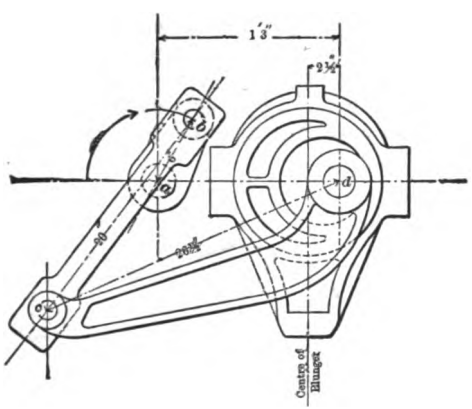

FIG. 326*a*.—CRANK ARM MECHANISM ON COARSE JIGS OF MILL 27.

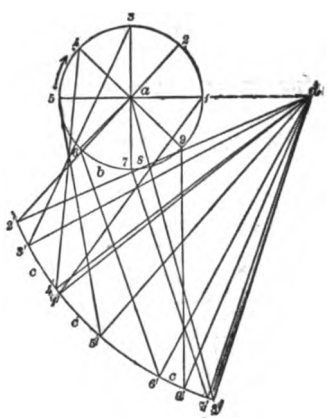

FIG. 326*b*.—SKELETON OF MECHANISM.

corresponding to the down stroke of the plunger while the driving crank is passing over the arc 2, 1, 8, and it has a slow motion for the up stroke of the plunger while the driving crank is passing over the arc 8, 5, 2. The ratio of the time of the up stroke to that of the down stroke is as the arc 8, 5, 2 is to the arc 2, 1, 8. This ratio may be varied by changing the distance *ad* between centers or the lengths of the cranks *ab* or *dc*. A very slight change makes a great difference in the ratio. The parts may be so proportioned that the driven crank makes a complete revolution, although this is not customary. It will be further noticed that the two periods of maximum velocity of the driven crank come when the driving crank is practically at right angles with the connecting rod, that is, about midway of the arc 9,1 on the down stroke, and about midway of the arc 5,6 on the up stroke.

The crank arm mechanism is used upon the coarse jigs of Mills 24 and 27 and upon all the jigs of Mill 28. The details of it in these mills are shown in Table 276. In regard to these movements, those in Mill 27 were very harsh and trying to the jig tanks, while those in Mill 28 were quiet and gentle. This difference must have been in the adjustments, which gave a greater discrepancy between the velocities and times of pulsion and suction in the former than in the latter

mill (see Table 276). It could not have been due to the strokes per minute, as they were practically alike.

TABLE 276.—CRANK ARM MECHANISM.

Mill No.	Jig No.	Length of Driving Radius.	Length of Driven Radius.	Length of Connecting Rod.	Distance Center to Center of Shafts.	Maximum Plunger Arm Radius.	Ratio of Maximum Velocity of Down Stroke to that of Up Stroke.	Ratio of Times, Up to Down Stroke.
		Inches.	Inches.	Inches.	Inches.	Inches.		
27	1 and 2	6	26½	20	15	2½	2.6	1.90
27	3, 4, 5 & 7	4	17¾	13½	9⅞	2	2.6	1.92
28	1, 2, 3, 4, 5, 6, 7 & 8	3¾	17¾	13½	10	.....	2.4	1.79
28	9, 10, 11 & 12	2½	17¾	11¾	10	.....	2.0	1.67

§ 410. *The Disc Motion.*—This is another form of four-bar-linkage. In Figs. 327*a* and 327*b* let *a* be the driving shaft and *b* a disc or flange upon it, and let *c* be the driven shaft, a little out of line with *a*, and *d* a flange upon it; *e* is a crank pin on *b*, and *f* is a crank pin on *d*; *g* is a connecting rod uniting the two crank pins. The two flanges face one another and are a short distance apart, to give room for the crank pins and connecting rod. When *a* revolves, *c* receives an accelerated and retarded motion, as shown by the eight different positions drawn on Fig. 327*a*, the amount of which can be varied by varying the distance between the centers, or the length of the connecting rod, or the length of the crank arms. This device has been put upon a newly designed jig by Charles J. Hodge, to gain varying speed in the different parts of the stroke.

As usually constructed, the lengths of the parts are such as to cause the driven

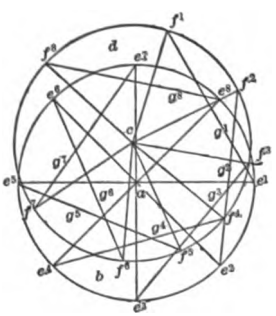

FIG. 327*a*.—END VIEW OF SKELETON OF DISC MOTION MECHANISM.

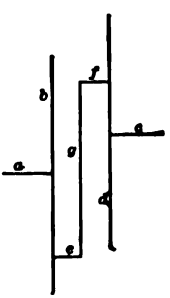

FIG. 327*b*.—SIDE VIEW.

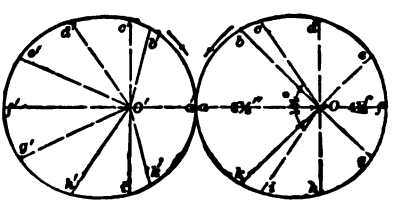

FIG. 328.—ELLIPTICAL GEAR MECHANISM IN MILL 14.

shaft to revolve instead of oscillate, as in the crank arm mechanism. The conditions, however, may be so varied that the driven disc may simply make an accelerated and retarded oscilllation, instead of a complete revolution.

Hammer and Spring.—This method of obtaining accelerated motion used on the Collom jig, has already been described under that head (see § 386).

§ 411. *Elliptical Gear.*—This requires two shafts, the driving shaft with heavy pulley to receive power and serve as a fly-wheel, which revolves at uniform velocity, and the driven shaft, which revolves with velocity varying from fast to slow, according to the ratio of the driving and driven radii of the two transmitting elliptical gears. Upon this second shaft the plunger eccentrics are so placed that the acceleration shall take place during the downward stroke and the retardation during the upward.

Mill 14 uses the Wendt jigs which have gears of this pattern, as shown in Fig. 328, on which the large radius of each gear is 8½ inches and the small radius

4½ inches. Referring to the figure, if *o* is the center of the driving gear about which it revolves in the direction of the arrow, and *o'* the same of the driven gear; then the arcs *ab, bd, de, ef, fg, gh, hk* and *ka* on the driving gear and the corresponding arcs *a' b', b' d'*, etc., on the driven gear are arcs passed over by each gear all in equal spaces of time, viz.: ⅛ of a revolution of the driving gear. During the quickest half revolution of the driven gear it revolves 180° over the arc *c' a' i'*, while the driving gear is revolving 101° over the arc *c a i*. During the slowest half revolution of the driven gear it revolves 180° over the arc *i' f' c'*, while the driving gear revolves 259° over the arc *i f c*. If the radius of eccentricity of the plunger eccentric is in the same phase as the shortest radius *o' a'* of the driven gear, then the ratio of the time of the up stroke to that of the down stroke will be as 259 : 101 or as 2.56 : 1. On the other hand, if the radius of eccentricity is in the same phase as the radius *o' i'*, then the time of the up stroke will be equal to that of the down stroke or the ratio will be as 1 : 1, but the plunger will have a gradually accelerated velocity on nearly the whole of its down stroke, and a gradually retarded velocity on nearly the whole of its up stroke. At any intermediate phase between *o' a'* and *o' i'*, the ratio will be intermediate between 2.56 : 1 and 1 : 1. In this mechanism the ratio of the maximum angular velocity of the driven gear to its minimum angular velocity is as 8½×8½ : 4½×4½ or 3. 57 :1.

§ 412. *Cam and Gravity.*—The Stutz coal jig lifts the plunger slowly by a cam and allows it to fall rapidly by gravity, loading it with a heavy weight for that purpose. The connecting rod passing down through the plunger and through a stuffing box in the bottom of the hutch, has a rubber buffer on its lower end to stop the fall.

Cam and Spring.—This, as used in the cōver jigs of Mills 44 and 47, is a short one-armed cam, working on the same principle as a gravity stamp cam, which pushes down the plunger rod a distance from 1¼ to 1½ inches, and the plunger is raised again by a spring. The result is a quick downward movement during pulsion and a slow return during suction. This was substituted for the Collom motion because a more positive motion was necessary for the very coarse stuff jigged.

Rittinger describes a motion consisting of a cam which lifts the plunger rod slowly and a spring which forces it down rapidly. This principle is also used in the New Century Drop Motion Jig of the American Concentrator Company.

Air Pressure and Gravity.—The use of air pressure and gravity to give a quick pulsion and slow suction in the Baum coal jig, has been already described (see § 391).

§ 413. Hydraulic Water.—This is either put in above the piston, passing down through the clearance space, or it is fed below the piston. On side plunger jigs, 16 mills (15, 18, 20, 21, 22, 24, 25, 26, 27, 28, 30, 31, 37, 39, 87 and 88), put the hydraulic water in above the plunger, and six mills (10, 44, 45, 46, 47 and 48), put it in below the plunger, that is, into the hutches. Of this last group, however, all but Mill 10 are Collom jigs, with which it is the rule to put the hydraulic water into the hutches. In putting it below, one does not need quite so high sides for the plunger compartment and a tighter and more positive fitting plunger can be used. On the other hand, water beneath the plunger may bring in air bubbles which may give trouble under the plunger or sieve. The Parsons jigs used in Mills 24 and 25, introduce the water directly into the hutches.

An idea has long existed that a jig, to do its best work, should diminish the suction due to the return of the plunger as far as possible, or in other words, a better separation would be obtained by allowing the mass of grains to fall back of their own accord, as in quiet water, instead of having them sucked

down by the returning current. There are several means of attaining this end, such as (1) introducing the water above the plunger and placing check valves in the plunger, which would open and allow the water to pass down through as the plunger rose, and close as it fell, or (2) introducing the water into the hutch beneath the plunger through a check valve in the opening leading to the source of supply, which valve would open and shut similarly to those in the plunger. The supply opening must be large enough to deliver water as fast as the rise of the plunger calls for it. Jigs working in this way may be called pulsion jigs. They are not used to any great extent to-day, except on coal washing, where it is claimed that suction is very undesirable, as tending to pull fine coal down into the hutch along with the slate. As examples of pulsion jigs, there are the McLanahan (see Fig. 313), Sheppard, Stutz, Luhrig, Osterspey and other coal jigs, in the majority of which the tailings water, after being settled, returns through check valves to the hutch.

The hydraulic water is delivered to the jigs by a water pipe with branches for each compartment and cocks regulating the amount. Dial cocks may be used to advantage for restoring adjustment after shut down. Mill 37 (see Figs. 306*a*-306*c*), and some of the manufacturers deliver it by a trough running upon the longitudinal partition with shut off gates in the bottom for the different compartments. The sizes of the pipes used are given in Table 277.

TABLE 277.—HYDRAULIC WATER PIPES.

Mill No.	Jig No.	Diameter Main Pipe.	Diameter Branch Pipes
		Inches.	Inches.
18.....	All.	2	1¼
21.....	1	.....	1
	5	.....	¾
25.....	1	.....	1½
	2 and 3	.....	1
30.....	All.	2	1
37.....	All.	Trough is 5½x4½	1¼
48.....	All.	2	1

§ 414. Sieve Frames are of wood or of iron. Wooden frames to which the sieves may be easily tacked, are the more common, and consist of two ends and two sides, of soft or hard wood boards on edge, joined at the corners, and on account of the flexibility of wire cloth or thin plate screen, cross bars are required when these materials are used. These bars of soft or hard wood on edge are placed across the screen. Sometimes a lattice made up of lengthwise and crosswise bars is used. The former form is less expensive and gives sufficient support. The bars are generally placed vertical. In the McLanahan jig, however, which has its plunger at the head of the sieve, the cross bars slope upward toward the tail, which helps the whole bed to move forward (see Fig. 313).

The tops of the bars are in the same horizontal plane as that of the frame. The screen is tacked to the bars by copper tacks or fastened by wire, and when it

TABLE 278.—DETAILS OF WOODEN FRAMES FROM SOME OF THE MILLS.

Mill No.	Jig No.	Size of Pieces of Frames		Lattice or Bars.	Size of Cross Bars.		Space between Bars.
		Height.	Width.		Height.	Width.	
		Inches.	Inches.		Inches.	Inches.	Inches.
15.....	All.....	3	1	Lattice	3	½	2¼
21.....	All.....	3	1	Bars	1	½	2½
22.....	All.....	3	⅞	Lattice	3	(*a*) ½	2½
24.....	All but No. 4, 1st sieve.	2½	¾	Lattice	2½	½	1½
24.....	No. 4, 1st sieve.....	2½	1	Bars	2½	(*b*) 1	3½
25.....	All.....	3	1	Bars	3	(*c*) 1	1½
27.....	All.....	3	1	Bars	3	½	2½
28.....	All.....	3	1	Lattice	3	½	.....
30.....	.....	3	¾	Lattice	3	½	3½x2
37.....	.....	2	1	Bars	2	⅞	2¼

(*a*) Beveled to ¼ inch at top. (*b*) Beveled to ¾ inch at bottom. (*c*) Beveled to $\frac{5}{16}$ inch at the bottom.

is worn out the whole frame is replaced by another with a new sieve. The sieve frames are quickly taken out by removing the linings above them. A stock of frames with new sieves on them is kept on hand. Table 278 shows the details of wooden frames from some of the mills. It is not uncommon to use bars $\frac{7}{8}$ inch thick and in that case the top is chamfered to about $\frac{3}{8}$ inch wide.

The outside dimensions of a sieve frame are a little smaller than the space into which it is dropped, so that it may be easily removed. In Mill 25 this space is filled with twisted hemp tamped in to hold the sieve in central position and avoid possible trouble from the sand. In Mill 30 this space is $\frac{1}{4}$ inch and is filled with packing.

The sieve frame should be made of such a thickness that inside it is just flush with the linings above and below it, in order to obtain as even currents as possible in both directions.

The use of bars for supporting the jigging sieve is necessary but it to some extent impairs the operation, particularly with fine jigs. When they are made thick, for example $\frac{7}{8}$ inch, they make dead lines across the sieve, alternating with bands of too great activity; when $\frac{1}{2}$ inch, the same is true to a less degree. The object of chamfering is to lessen this evil. The author has used for overcoming this difficulty, on little laboratory jigs, bars *c* of brass plate $\frac{1}{16}$ inch thick and $1\frac{1}{2}$ inches high, the sieve *d*, being held to them by bent soft brass wire *a b*, (see Fig. 329). The upper bend *b* in the wire is made beforehand and then slipped into place; the lower bend *a* is easily made with pincers and holds the sieve tightly in place. Supports of this kind placed 2 inches apart with clamp wires also 2 inches apart, furnish a support for the sieve which does not give any visible imperfection in the jigging.

§ 415. Iron Sieve Frames.—Mill 18 has a sieve frame of cast iron divided horizontally into two parts, one above and one below, with the sieve between them. Each has four longitudinal grate bars. These bars widen both downward and upward toward the screen from $\frac{1}{8}$ inch to $\frac{1}{2}$ inch thick and

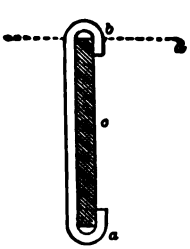

FIG. 329.

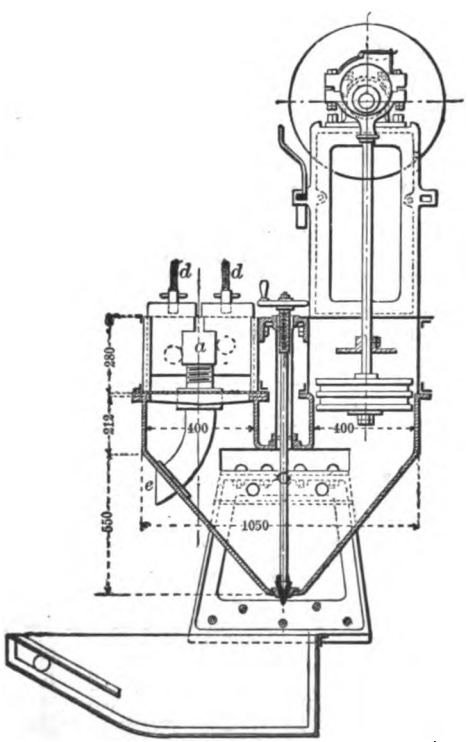

FIG. 330.—SECTION OF THE FERRARIS INTERMEDIATE JIG.
(Dimensions in millimeters.)

the vertical height of each of the bars is about 1 inch. The lower part rests on four lugs; the upper part is held down by four wedges driven between it and four upper lugs. The upper and lower lugs are in pairs and each pair is connected by a flat cast bar of iron which is let into the wooden wall of the jig.

Mill 20 uses iron sieve frames for No. 1 and No. 2 jigs which differ from the above in the fact that the frames are of ¾-inch wide, 1-inch high pieces, and the two longitudinal bars are ½ inch wide and 1 inch high, all cast in one piece. Nos. 3, 4 and 5 jigs use also two cross bars ½ inch wide, 1 inch high, making a lattice work. These rest upon a wooden ledge ¾ inch wide all around and are held down by wooden lugs, one on each side, and wedges on the jig walls above.

In Mill 26 jigs Nos. 1, 2 and 3 have iron frames in two parts above and below the sieve. The frames are 1 inch thick, 1⅛ inches high, with three longitudinal bars ¾ inch thick, 1⅛ inches high. Jigs 4, 5 and 6 are the same, except that they have but two bars.

Ferraris at Monteponi, Sardinia, uses an iron lattice supporting frame with diagonal cross bars, in an iron jig tank, with a top frame which has no bars upon it (see Fig. 330). The joint is made tight with red lead. This sieve appears to be held down only at the margin. If so, there is an objection to it which does not exist in the other mountings. If the sieve blinds up with sand, the middle of it will rise and fall with the whole bed and interfere with the settling.

At Przibram, iron cross bars alone have been used to support the screen, the usual wooden cleats or linings serving to keep it down at the margin.

The use of the double iron frame saves the necessity of keeping a complete supply of duplicate screen frames. It saves the expense of tacking the screens to the frames. It simplifies the changing of screens, and where a lattice is used, it prevents the forward motion of the bottom bed. On the other hand, while the narrow central bars may lessen the dead lines on the jigging bed, the marginal bars make a much worse dead edge than is found with the usual wooden screens held down by linings. Screens mounted in this way cannot be cleaned as well as those of the ordinary wooden pattern (see § 431).

TABLE 279.—JIG SCREENS.

Abbreviations.—B. W. G.=Birmingham Wire Gauge; In.=inches; No.=number.

Mill No.	Jig No.	Sieve No.	Material of Screen.	Thickness of Wire or Plate.	Meshes per Linear Inch.	Net Size of Hole.		Percent of Opening.	Life of Screens	Size of Feed to the Jig.
				B. W. G.		Inches.	Mm.		Days.	Mm.
10	1	1 to 5	Iron grating	¼ inch.	.....	0.125	3.18	33	(a) 300	12.7 to 0
	2	1 to 6	Steel cloth	4 to 6	.....	.....	.....	.....	(a) 150	3.2 to 0
12	4	1 to 4	Cloth	.....	16	.....	.....	.....	.....	12 mesh to 0
13	1	1	Steel cloth	0.22 inch.	.....	1.25	31.75	73	(a) 300	19.1 to 12.7
	2	1	"	0.15 "	.....	0.75	19.05	69	(a) 450	12.7 to 6.35
	3	1	"	0.12 "	.....	0.25	6.35	46	(a) 450	6.35 to 0
14	1	1 & 2	Cloth	0.15 "	1	0.85	21.59	72	.....	22.2 to 9.5
	2	1 & 2	"	0.125 "	2	0.375	9.53	56	.....	9.5 to 0
15	1	1 to 4	Steel cloth	12	4	0.141	3.58	32	(a) 120	Over 12.4
	2	1 to 4	"	16	6	0.102	2.59	37	(a) 120	12.4 to 4.7
	3	1 to 4	Brass cloth	18	10	0.051	1.30	26	(a) 72	4.7 to 2.4
	4	1 to 4	"	22	16	0.035	0.89	31	(a) 72	2.4 to 0
	5	1 to 4	"	.....	25	.....	.....	.....	(a) 72	2.4 to 0
16	1	1	Cast-iron grating (b)	½ inch.	.....	0.187	4.76	45	(a) 600	20 to 10
	2	1 to 4	Copper cloth	15	7	0.071	1.80	25	(a) 300	10 to 5 & 5 to 2
	3	1	"	22	16	0.035	0.89	31	(a) 365	2 to 0
		2	"	18	10	0.051	1.30	26	(a) 600	
		3	"	18	10	0.051	1.30	26	(a) 600	
17	1	1 & 2	"	15	7	0.071	1.80	25	.....	10 to 7
	2	1 to 4	"	15	7	0.071	1.80	25	.....	7 to 5
	3	1 to 4	"	18	10	0.051	1.30	26	.....	5 to 3½ (c)
	4	1 to 4	"	19	12	0.041	1.04	24	.....	2 to 0
	5 & 6	1 to 4	"	22	16	0.035	0.89	31	.....	2 to 0
18	1	1 to 4	Steel cloth	14	4	0.167	4.24	45	.....	4 to 6 mesh
	2	1 to 4	"	18	6	0.118	3.00	50	.....	6 to 8 mesh
	3	1 to 4	"	18	8	0.076	1.93	37	.....	8 to 10 mesh
	4	1 to 4	"	20	10	0.065	1.65	42	.....	10 mesh to 0
	5	1 to 4	"	20	12	0.048	1.22	33	.....	10 mesh to 0
20	1	1	"	9	2½	0.252	6.40	40	20 to 60	6.4 to 3.7
		2	"	9	2½	0.252	6.40	40	20 to 60	
		3	"	8	2	0.338	8.59	46	60 to 100	

TABLE 279.—JIG SCREENS.—*Continued.*

Mill No.	Jig No.	Sieve No.	Material of Screen.	Thickness of Wire or Plate.	Meshes per Linear Inch.	Net Size of Hole. Inches.	Net Size of Hole. Mm.	Percent of Opening.	Life of Screens	Size of Feed to the Jig.
				B. W. G.					Days.	Mm.
20	2	1	Steel cloth	11	3	0.213	5.41	41	20 to 60	3.7 to 2.7
		2	"	11	3	0.213	5.41	41	20 to 60	
		3	"	9	2½	0.252	6.40	40	.....	
	3	1	"	12	4	0.145	3.68	34	20 to 60	2.7 to 1.5
		2	Brass cloth	13	5	0.108	2.74	29	60 to 180	
		3	"	13	5	0.108	2.74	29	60 to 180	
	4 & 5	1 to 3	"	16	8	0.060	1.52	23	60 to 180	1.5 to 0
21	1	1 to 3	Steel cloth	16	4	0.185	4.70	55	60	4.6 to 3.5
	2	1 to 4	"	18	5	0.151	3.84	57	60	3.5 to 1.22
	3	1 to 4	"	20	10	0.065	1.65	42	90	1.22 to 0
	4	1 to 4	"	22	12	0.055	1.40	44	90	1.22 to 0
	5	1 to 4	Brass cloth	22	16	0.035	0.89	31	90	0.64 to 0
	6	1 to 2	"	22	16	0.035	0.89	31	90	0.64 to 0
22	1	1 to 3	Steel cloth	10	2	0.366	9.30	54	.....	Over 12
	2	1	"	10	3	0.199	5.05	36	.....	12 to 6
		2	"	(*d*) 10	4	0.148	3.76	35	.....	
	3	1	"	(*d*) 11	5	0.109	2.77	30	.....	6 to 3
		2	"	(*d*) 12	6	0.086	2.18	27	.....	
	4 & 5	1	"	(*d*) 13	7	0.071	1.80	25	.....	3 to 0
		2	"	(*d*) 14	8	0.061	1.55	24	.....	
		3	"	(*d*) 14	8	0.061	1.55	24	.....	
e 23										
24	1	1 & 2	Copper cloth (*f*)	19	10	0.058	1.47	34	78	10 to 7
				18	6	0.118	3.00	50	1,200	
	2	1 & 2	" (*f*)	19	10	0.058	1.47	34	210	7 to 5
				18	6	0.118	3.00	50	1,200	
	3	1 & 2	" (*f*)	19	10	0.058	1.47	34	252	5 to 3
				18	6	0.118	3.00	50	1,200	
	4	1	"	14	4½	0.139	3.53	39	300	3 to 0
		2	" (*f*)	23	14	0.046	1.17	41	180	
				18	6	0.118	3.00	50	1,200	
	5	1	"	19	10	0.058	1.47	34	300	3 to 0
	6	1 & 2	" (*f*)	23	14	0.046	1.17	41	240	3 to 0
				19	10	0.058	1.47	34	1,200	
		3	" (*f*)	26	20	0.032	0.81	41	102	
				19	10	0.058	1.47	34	1,200	
25	1	1 & 2	"	16	5½x5¾	0.109x 0.117	2.77x 2.97	40	660	6 to 0
	2	1 to 3	"	.....	7¼x8	.....	.....	.....	400	.....
	3	1 to 3	"	.....	7¼x8	.....	.....	.....	500	3 to 0
g 26	1	1 to 3	Steel cloth	12	3	0.224	5.69	45	.....	5.7 to 3.6
	2	1 to 3	"	11	3	0.213	5.41	41	.....	3.6 to 2.1
	3	1 to 3	"	12	4	0.141	3.58	32	.....	2.1 to 1.5
	4	1 to 3	"	14	6	0.084	2.13	25	90 to 120	1.5 to 0.91
	5 & 6	1 to 3	"	14	6	0.084	2.13	25	.....	0.91 to 0
27	1	1 & 2	"	(*h*) 10	3	0.198	5.03	35	55	38 to 25
	2									25 to 15.9
	3	1 to 4	"	(*h*) 13	5	0.108	2.74	29	56	15.9 to 12.7
	4									12.7 to 10.3
	5	1 to 4	"	(*h*) 16	8	0.062	1.57	25	42 to 56	10.3 to 8.3
	6	1 to 4	"	(*h*) 16	8	0.062	1.57	25	28 to 42	8.3 to 4.4
	7	1 to 4	"	(*h*) 19	10	0.059	1.50	35	28	4.4 to 2.78
	8	1 to 5	"	(*h*) 22	16	0.035	0.89	31	21	2.78 to 1.98
	9									1.98 to 0
	10 & 11	1 to 5	"	(*h*) 24	20	0.027	0.69	29	.....	1.98 to 0
28	1	1	Iron cloth	$\frac{1}{16}$ inch.	4	0.187	4.75	56	40	40 to 25
	2									25 to 16
	3	1 to 4	"	$\frac{1}{16}$ inch.	4	0.187	4.75	56	36	16 to 12
	4	1 to 4	Brass cloth	19	6	0.125	3.18	56	42	12 to 8
	5									8 to 5
	6	1 to 4	"	19	12	0.041	1.04	24	42	5 to 3.5
	7	1 to 4	"	22	16	0.035	0.89	31	35 to 42	3.5 to 2
	8	1 to 4	"	19	12	0.041	1.04	24	.....	3.5 to 2
	9 & 10	1 to 5	"	19	6	0.125	3.18	56	56	2 to 0
	11 & 12	1 to 5	"	19	12	0.041	1.04	24	.....	2 to 0
29	1	1 to 4	Steel cloth	16	4	0.185	4.70	55	.....	6 to 4
	2	1 to 4	"	16	5	0.135	3.43	46	.....	4 to 3
	3	1 to 4	"	16	8	0.060	1.52	23	.....	3 to 2.5
	4	1 to 4	Punched steel plate	.....	.....	0.098	2.5	.....	.....	2.5 to 0
	5	1 to 4	" "	.....	.....	0.079	2.0	.....	.....	2.5 to 0
30	1	1 to 3	Steel cloth	12	5	0.091	2.31	21	90	25 to 15
	2									15 to 10
	3	1	Brass cloth	12	5	0.091	2.31	21	240	10 to 7
		2	"	14	8	0.042	1.07	11		
		3	"	14	8	0.042	1.07	11		
	4	1 to 3	"	16	10	0.035	0.89	12	240	7 to 5
	5									5 to 3
	6	1	"	14	8	0.042	1.07	11	300	3 to 0
		2	"	16	10	0.035	0.89	12		
		3	"	16	10	0.035	0.89	12		
	7 & 8	1 to 4	"	16	10	0.035	0.89	12	300	3 to 0

TABLE 279.—JIG SCREENS.—*Continued.*

Mill No.	Jig No.	Sieve No.	Material of Screen.	Thickness of Wire or Plate.	Meshes per Linear Inch.	Net Size of Hole.		Percent of Opening.	Life of Screens	Size of Feed to the Jig.
				B. W. G.		Inches.	Mm.		Days.	Mm.
31	1	1 & 2	Brass cloth	12	4	0.141	3.58	32	.....	Over 18
	2									18 to 15
	3	1 & 2	"	16	6	0.102	2.59	37	.....	15 to 9
	4									9 to 6
	5									6 to 4
	6	1 to 4	"	18	6	0.118	3.00	50	.....	4 to 0
	7									4 to 0
	8									4 to 0
	9	1 to 4	"	20	12	0.048	1.22	32	.....	2.5 to 0
	10									2.5 to 0
	11									2.5 to 0
32	1									On 12
	2									12 to 8
	3									8 to 6
	4	1 to 4	"	18	8	0.076	1.93	37	.....	6 to 3
	5									3 to 0
	6									3 to 0
	8									2 to 0
	7	1 to 4	Brass cloth	20	10	0.065	1.65	42	.....	3 to 0
	9 & 10	1 to 4	"	22	12	0.055	1.40	44	.....	2 to 0
i 33										
34	1	1 to 3	"	16	3	0.268	6.81	65	.....	15 to 13
	2									13 to 11
	3	1 to 3	"	17	4	0.192	4.88	59	.....	11 to 9
	4	1 to 3	"	17	5	0.142	3.61	50	.....	9 to 7
	5	1 to 4	"	18	6	0.118	3.00	50	.....	7 to 5
	6									5 to 3
	1		"	18	8	0.076	1.93	37	.....	
	2		"	18	8	0.076	1.93	37	.....	
	7		"	20	10	0.065	1.65	42	.....	3 to 0
	3		"	20	10	0.065	1.65	42	.....	
	4		"	20	10	0.065	1.65	42	.....	
	8	1 to 4	"	22	12	0.055	1.40	44	.....	3 to 0
	9	1 to 4	"	24	16	0.041	1.04	43	.....	3 to 0
35	1	1 to 3	Steel plate	$\frac{1}{8}$ inch.	.....	*j* 0.157	4.00	31	.....	Over 16
	2	1 to 3	"	$\frac{3}{16}$ inch.	.....	*j* 0.118	3.00	17	90	16 to 9
	3	1 to 3	Brass cloth	14	6	0.084	2.13	25	90	9 to 5
	4	1 to 3	"	14	7	0.060	1.52	18	90	5 to 3
	5	1 & 2	"	14	6	0.084	2.13	25	360	3 to 0
	6, 7 & 8	1 & 2	"	16	8	0.060	1.52	23	360	3 to 0
	9	1 to 3	"	16	8	0.060	1.52	23	780	2.5 to 0
	10 & 11	1 to 3	"	18	10	0.051	1.30	26	780	2.5 to 0
k 36										
38	1	1 & 2	Steel plate	10	.....	*l* 0.31	7.94	51	42	38.1 to 22.2
	2	1 & 2	"	10	.....	*l* 0.31	7.94	51	84	22.2 to 9.5
	3	1 & 2	Brass cloth	14	4	0.167	4.24	45	28	9.5 to 5
	4	1 & 2	"	16	6	0.102	2.59	37	56	5 to 2.5
	5 & 9	1	"	16	6	0.102	2.59	37	84	2.5 to 0
		2	"	18	8	0.076	1.93	37		
	6 & 10	1 to 4	"	18	8	0.076	1.93	37	84	2.5 to 0
	13&14									1.5 to 0
	7 & 11	1	"	19	10	0.058	1.47	34	70	2.5 to 0
		2	"	20	12	0.048	1.22	33		
	8 & 12	1	"	19	10	0.058	1.47	34	70	2.5 to 0
		2	"	20	14	0.036	0.91	25		
	15	1 to 3	"	12	3	0.294	5.69	45	.....	22.2 to 9.5
	16	1 to 3	"	16	6	0.102	2.59	37	.....	9.5 to 5
39	1	1	White cast iron plate	.....	.....	*m* 0.375	9.53	30	.....	54.0 to 38.1
	2	1	Steel plate	(*n*)	.....	*n* 0.315	8.00	25	.....	38.1 to 15
	3	1	Copper cloth	12	4	0.141	3.58	32	.....	15 to 8.5
	4	1	"	13	5	0.105	2.67	28	.....	8.5 to 4.5
	5	2	"	14	6	0.084	2.13	25		
		3	"	16	8	0.060	1.52	23		4.5 to 0
	6	1	"	14	6	0.084	2.13	25	.....	4.5 to 0
		2	"	16	8	0.060	1.52	23		
		3	"	16	8	0.060	1.52	23		
	7	1	"	16	8	0.060	1.52	23	.....	4.5 to 0
		2	"	18	10	0.051	1.30	26		
		3	"	18	10	0.051	1.30	26		
		4	"	19	12	0.041	1.04	24		
	8	1	"	19	12	0.041	1.04	24	.....	4.5 to 0
		2	"	19	12	0.041	1.04	24		
		3	"	20	14	0.036	0.91	25		
		4	"	20	14	0.036	0.91	25		
	9	1	"	14	6	0.084	2.13	25	.....	2.5 to 0
		2	"	16	8	0.060	1.52	23		
		3	"	16	8	0.060	1.52	23		
		4	"	16	8	0.060	1.52	23		
	10	1	"	16	8	0.060	1.52	23	.....	2.5 to 0
		2	"	16	8	0.060	1.52	23		
		3	"	18	10	0.051	1.30	26		
		4	"	18	10	0.051	1.30	26		

TABLE 279.—JIG SCREENS.—*Continued.*

Mill No.	Jig No.	Sieve No.	Material of Screen.	Thickness of Wire or Plate.	Meshes per Linear Inch.	Net Size of Hole.		Percent of Opening.	Life of Screens	Size of Feed to the Jig.
				B. W. G.		Inches.	Mm.		Days.	Mm.
40	1	1	Brass cloth	.....	4	.....	.....	.....	.....	20 to 7
	2	1 to 3	Steel cloth	12	3	0.224	5.69	45	240	7 to 4.5
	3	1	"	12	4	0.141	3.58	32	135	4.5 to 3
		2	"	12	4	0.141	3.58	32	110	
		3	"	14	5	0.117	2.97	34	110	
	4, 5 & 6	1 to 3	"	18	10	0.051	1.30	26	60	3 to 0
41	1	1 & 2	Brass cloth	16	4	0.185	4.70	55	.....	15.9 to 9.5
	2	1	Plate (*o*)	.....	.....	0.25	6.35	.....	.....	9.5 to 6.35
		2	Plate (*o*)	.....	.....	0.25	6.35	.....		
		3	Brass cloth	16	5	0.135	3.43	46		
	3	1 to 3	"	16	5	0.135	3.43	46	.....	6.35 to 3.2
	4									3.2 to 0
	5	1 to 4	"	17	6	0.109	2.77	43	.....	3.2 to 0
	6	1 to 4	"	18	8	0.076	1.93	37	.....	3.2 to 0
	7	1 to 4	"	18	10	0.051	1.30	26	.....	3.2 to 0
	8 & 12	1 to 4	"	20	12	0.048	1.22	33	.....	3.2 to 0
	9 & 10	1 to 3	"	18	6	0.118	3.00	50	.....	3.2 to 0
	11	1 to 3	"	18	7	0.094	2.39	43	.....	3.2 to 0
42	1	1	Cloth	.....	4	.....	.....	.....	360	12.7 to 6.35
	2	1	Brass cloth	.....	4	.....	.....	.....	.....	6.35 to 0
		2	"	.....	8					
	3	1	"	.....	8	.....	.....	.....	.....	6.35 to 0
		2	"	.....	10					
	4	1	"	.....	10	.....	.....	.....	.....	6.35 to 0
	14	2	"	.....	12					2.54 to 0
	5&8to11	1	"	.....	12	.....	.....	.....	.....	6.35 to 0
	15 to 17	2	"	.....	14					2.54 to 0
	12 & 13	1 & 2	"	.....	14	.....	.....	.....	.....	6.35 to 0
43	1	1	Iron cloth	(*d*) 12	4	0.169	4.29	46	35	25.4 to 11.1
	2	1	Copper cloth	14	6	0.084	2.13	35	60	11.1 to 0
		2	"	18	8	0.076	1.93	37		
	3	1 & 2	"	20	10	0.065	1.65	42	60	11.1 to 0
	4	1	"	20	10	0.065	1.65	42	60	11.1 to 0
		2	"	21	12	0.051	1.30	37		
	5	1 & 2	"	21	14	0.039	0.99	30	60	11.1 to 0
	7									1.30 to 0
	6	1	"	20	10	0.065	1.65	42	60	1.65 to 0
		2	"	21	14	0.039	0.99	30		
	8	1	"	18	8	0.076	1.93	37	.....	3 to 2
		2	"	18	8	0.076	1.93	37		
		3	"	20	10	0.065	1.65	42		
	9	1	"	18	8	0.076	1.93	37	.....	2 to 0
		2	"	20	10	0.065	1.65	42		
		3	"	20	10	0.065	1.65	42		
44	1	1	Plate	.....	.....	*p* 0.50	12.7	.....	.....	76.2 to 0
	2	1	Brass cloth	20	8	0.090	2.29	52	.....	4.76 to 0
		2	"	21	10	0.068	1.73	46		
	3	1	"	21	10	0.068	1.73	46	.....	4.76 to 0
		2	"	24	12	0.061	1.55	54		
	4	1	"	24	12	0.061	1.55	54	.....	4.76 to 0
		2	"	25	16	0.043	1.09	47		
	5	1	"	25	16	0.043	1.09	47	.....	4.76 to 0
		2	"	26	20	0.032	0.81	41		
	6	1	"	21	10	0.068	1.73	46	.....	1.73 to 0
		2	"	24	12	0.061	1.55	54		
		3	"	25	16	0.043	1.09	47		
	7	1	"	24	12	0.061	1.55	54	.....	1.73 to 0
	12	2	"	25	16	0.043	1.09	47		2.54 to 0
		3	"	25	16	9.043	1.09	47		
	8	1	"	25	16	0.043	1.09	47	.....	1.55 to 0
	9	2	"	26	20	0.032	0.81	41		1.09 to 0
		3	"	26	20	0.032	0.81	41		
	13	1	"	24	12	0.061	1.55	54	.....	2.54 to 0
		2	"	25	16	0.043	1.09	47		
		3	"	26	20	0.032	0.81	41		
	14	1	"	25	16	0.043	1.09	47	.....	2.54 to 0
		2	"	25	16	0.043	1.09	47		
		3	"	26	20	0.032	0.81	41		
46	1	1	"	20	8	0.090	2.29	52	225	4.76 to 0
		2	"	21	10	0.068	1.73	46		
	2	1	"	21	10	0.068	1.73	46	300	4.76 to 0
		2	"	21	12	0.051	1.30	37		
	3	1 & 2	"	21	12	0.051	1.30	37	450	4.76 to 0
	4	1	"	21	12	0.051	1.30	37	450	4.76 to 0
		2	"	23	14	0.046	1.17	41		
	5	1 & 2	"	23	14	0.046	1.17	41	450	4.76 to 0
	6	1	"	23	14	0.046	1.17	41	600	4.76 to 0
		2	"	25	16	0.043	1.09	47		
	7	1	"	21	10	0.068	1.73	46	300	2.29 to 0
		2	"	21	12	0.051	1.30	37		
		3	"	21	12	0.051	1.30	37		

TABLE 279.—JIG SCREENS.—*Concluded.*

Mill No.	Jig No.	Sieve No.	Material of Screen.	Thickness of Wire or Plate.	Meshes per Linear Inch.	Net Size of Hole. Inches.	Net Size of Hole. Mm.	Percent of Opening.	Life of Screens.	Size of Feed to the Jig.
				B. W. G.					Days.	Mm.
46	8	1	Brass cloth	21	12	0.051	1.30	37	300	1.73 to 0
		2	"	23	14	0.046	1.17	41		
		3	"	23	14	0.046	1.17	41		
	9	1	"	21	12	0.051	1.30	37	450	1.30 to 0
		2	"	23	14	0.046	1.17	41		
		3	"	23	14	0.046	1.17	41		
	10	1	"	23	14	0.046	1.17	41	450	1.30 to 0
		2	"	23	14	0.046	1.17	41		
		3	"	25	16	0.043	1.09	47		
	11	1	"	23	14	0.046	1.17	41	600	1.17 to 0
		2	"	25	16	0.043	1.09	47		
		3	"	25	16	0.043	1.09	47		
	12	1	"	25	16	0.043	1.09	47	600	1.17 to 0
		2	"	26	18	0.038	0.97	47		
		3	"	26	18	0.038	0.97	47		
47	1	1 & 2	"	23	10	0.075	1.91	56	.....	25.4 to 0
	2	1	"	20	6	0.182	3.85	68	.....	4.76 to 0
		2	"	22	8	0.097	2.46	60		
	3	1	"	22	8	0.097	2.46	60	.....	4.76 to 0
		2	"	24	12	0.061	1.55	54		
	4	1	"	24	12	0.061	1.55	54	.....	4.76 to 0
		2	"	25	14	0.051	1.30	51		
	5	1	"	25	14	0.051	1.30	51	.....	4.76 to 0
		2	"	26	16	0.045	1.14	52		
	6	1	"	23	10	0.075	1.91	56		
		2	"	24	12	0.061	1.55	54	.....	3.35 to 0
		3	"	25	14	0.051	1.30	51		
	7	1	"	24	12	0.061	1.55	54		
		2	"	25	14	0.051	1.30	51	.....	2.46 to 0
		3	"	26	16	0.045	1.14	52		
	8	1	"	25	14	0.051	1.30	51		
	9	2	"	26	16	0.045	1.14	59	.....	1.55 to 0
		3	"	26	16	0.045	1.14	59		1.30 to 0
48	1	1	"	20	8	0.090	2.29	52	150	4.76 to 0
		2	"	21	10	0.068	1.73	46	300	
	2	1	"	21	10	0.068	1.73	46	300	4.76 to 0
		2	"	21	12	0.051	1.30	37		
	3	1	"	21	12	0.051	1.30	37	450	4.76 to 0
		2	"	23	14	0.046	1.17	41		
	4	1	"	23	14	0.046	1.17	41	450	4.76 to 0
		2	"	25	16	0.043	1.09	47		
	5	1	"	21	10	0.068	1.73	46	300	2.29 to 0
		2	"	21	12	0.051	1.30	37		
		3	"	21	12	0.051	1.30	37		
	6	1	"	21	12	0.051	1.30	37	450	1.73 to 0
		2	"	21	12	0.051	1.30	37		
		3	"	23	14	0.046	1.17	41		
	7	1	"	23	14	0.046	1.17	41	600	1.30 to 0
		2	"	23	14	0.046	1.17	41		
		3	"	25	16	0.043	1.09	47		
	8	1	"	25	16	0.043	1.09	47	600	1.17 to 0
		2	"	26	18	0.038	0.97	47		
		3	"	26	18	0.038	0.97	47		
86	1	1	Steel cloth	11	2½	0.280	7.11	49	About 75	9 to 6.5
		2	"	13	3	0.238	6.05	51		
		3	"	13	3	0.238	6.05	51		
	2	1 to 3	"	14	4	0.167	4.24	45	About 75	6.5 to 3
	3	1 to 3	"	15	5	0.128	3.25	41		3 to 1.25
	4	1 to 3	Cloth	17	8	0.067	1.70	29		*g* 0.545 to 0.38
r 87 88	1	1 to 4	Steel cloth	.....	3	.....	.....	.....	.....	3 to 6 mesh.
	2	1 to 4	"	.....	4, 6, 6, 6	.....	.....	.....	.....	6 to 10 mesh.
	3	1 to 4	"	.....	8, 10, 10, 10	.....	.....	.....	.....	10 mesh to 0.
	4	1 to 3	"	.....	8, 10, 10	.....	.....	.....	.....	10 mesh to 0.
	5	1 to 3	"	.....	10, 10, 16	.....	.....	.....	.....	10 mesh to 0.
99	1	1	"	.....	8	.....	.....	.....	.....	10 to 16 mesh.
		2	"	.....	8					
		3	Brass cloth	.....	12					
		4	"	.....	12					
	2	1	"	.....	12	.....	.....	.....	.....	16 to 24 mesh.
		2	"	.....	14					
		3	"	.....	14					
		4	"	.....	16					
	3	1 to 3	"	.....	14, 14, 16	.....	.....	.....	.....	24 to 30 mesh.
	4 a & 4 b	1 & 2	"	.....	18	.....	.....	.....	.....	30 to 50 mesh.

(*a*) These are 10-hour days. All the others are 24-hour days. (*b*) See Fig. 331. (*c*) Or 3½ to 2 mm. (*d*) This is American Wire Gauge. (*e*) This mill has six jigs, all with 10-mesh copper cloth screen. The sizes fed are respectively 7 mm., 7 to 5, 5 to 3, 3 to 0, 3 to 0 (first spigot), and 3 to 0 (second spigot). (*f*) These are double screens, the lower layer being coarser and used to support the upper, which is finer. (*g*) This mill uses old trommel screens. (*h*) These are Washburn and Moen gauge. (*i*) This mill has five jigs with sieves 8, 8, 8,

12 and 14 mesh respectively. The sizes fed are respectively 12 to 7.9 mm., 7.9 to 5.1 mm., 5.1 to 3.3 mm., 3.3 to 0 (first spigot), and 3.3 to 0 (second spigot). (*j*) These are old trommel screens and the holes are ¼ inch apart, center to center. (*k*) This mill has five jigs, of which the first three have 8, 12 and 12 mesh iron cloth sieves respectively, and the last two have 12 and 16 mesh brass cloth. The sizes fed are the same as in Mill 33. (*l*) These are square holes with ⅛-inch space between the holes. (*m*) These holes are round and are ¾ inch apart, center to center. (*n*) These holes are round and are $\frac{5}{16}$ inch apart, center to center, punched in No. 4 steel. (*o*) This is old screen plate of No. 3 trommel with round holes. (*p*) This is a round hole. (*q*) The former is a slot, the latter a square hole. (*r*) This mill has six jigs with steel cloth sieves of 4, 6, 8, 10, 12 and 24 or 30 (depending upon the battery screen with which it is identical) meshes respectively. The materials fed are: Through 3 or 4 mesh on 6, 6 on 8, 8 on 12, through 12 (first spigot), through 12 (second spigot), and through 24 or 30.

§ 416. MATERIALS FOR JIG SCREENS.—The practice of the mills in the use of jig screens is given in Table 279.

The materials used in the mills are white cast iron, steel punched plate, steel, iron, brass and copper wire cloth. Bronze wire cloth was tried in Mill 39, but the results were unsatisfactory. Furman finds also punched Russia iron plate and copper plate in use on jigs. White cast iron and steel punched plate have the advantage of cheapness and stand the rough, hard usage for coarse jigs. For fine screens, however, punched plate has too small a percentage of opening and tends to blind up more than cloth. The sharp edges of the holes in plate, causing a *vena contracta,* reduce the flow of water still more than the percentage of opening would imply. White cast iron with round holes is used in the coarse jig of one mill only (39). This screen is made in two sections. The holes are conical, ⅜ inch diameter at the top and ½ inch diameter at the bottom, to avoid blinding. Cast iron gratings are used in the coarse jigs of two mills; that in Mill 16 is made in eight panels or sections with V-shaped bars running across the jig. One section is shown in Fig. 331. The construction of the screen in Mill 10 is very similar to the preceding. Steel punched plate is used in the coarse jigs of four mills, in the medium jigs of one mill and in the fine jigs of one mill.

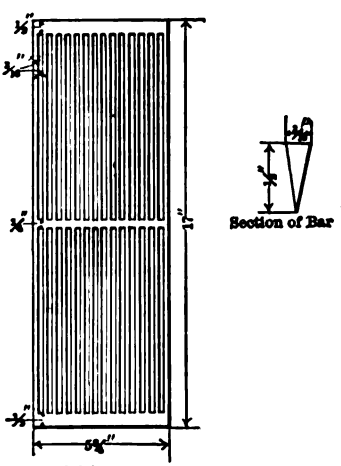

FIG. 331.—CAST IRON SIEVE AT MILL 16.

Steel cloth has a larger percentage of opening than castings or plate and is used on coarse and fine jigs. It is used in all the jigs of nine mills, in the coarse jigs of six mills and in the fine jigs of one mill. Iron cloth is cheaper than steel cloth, but it corrodes more rapidly. It was found in the coarse jigs of three mills. Brass cloth is comparatively hard, though softer than steel and it resists corrosion much better than steel. It is used in all the jigs of ten mills and in the fine jigs of nine mills. Mill 86 has no difficulty in using brass cloth screens, while punched plates were discarded on account of their low percentage of opening. The heavy pyritic ore did not work down into the hutch freely enough. At Mill 34, brass cloth was used to replace steel cloth which rusted out while the mill was shut down. It is probable that either steel or brass screens could be prevented from corroding during the time when the mill is idle by a thick coat of black varnish. Copper cloth, although quite soft, resists corrosion better than any other of the materials named. It is used in all the jigs of four mills and in the fine jigs of three mills.

Summing up, it will be seen that in jigs cloth screens greatly predominate, while in revolving screens plate predominates, and in gravity stamps the two are about equally divided. For a further discussion of the properties of various metals for screens, the reader is referred to § 154 in gravity stamps, and § 274 in revolving screens. He should bear in mind, however, that jig screens do not have such hard usage, because they are better supported and they are less

subjected to attrition. The utilization of old trommel screens for purposes of economy is practised in Mills 26, 35 and 41. Mill 24 is noteworthy as using two sieves, a coarser beneath and a finer above, in addition to the usual supporting bars. This device is to prevent flexure of the finer sieve and thereby to lengthen its life.

§ 417. PERCENTAGE OF OPENING.—The mill man should decide upon the size of hole that he wants, rather than the meshes to the inch, and should order sieves on that basis. For logical reasons, the size of hole is discussed later (see § 427).

Then, for any given size of hole, a large wire would appear at first sight to have the advantage of greater durability than a fine wire; but it gives a smaller percentage of opening, making the jigging less free, requiring greater piston pressure for the pulsion and suction and causing greater flexure and strain upon the sieve, which will partially reduce the advantage sought and may even give a shorter life than the fine wire. The author is unable to prove this statement from Table 279. Comparing Mills 28 and 30, the figures on life seem to disprove it, but comparing Mill 30 with Mills 24 and 40, it would seem that nothing has been gained by the large wires of Mill 30. The size of the wire also affects the tendency of the sieve to blind up. The smaller the wire, the more flexible will be the sieve and the less will be the tendency to blind. Cloth made of too fine wire will have its wires spread and lose its size of mesh, even if the cloth is double crimped. The cost of the cloth, which diminishes rapidly as the wires are reduced in size (see Table 281), furnishes an additional reason for using small wire. The tables show that natural development has recognized these advantages and that the sieves used for jigs have smaller wires and larger percentages of opening than those used in the revolving screens or gravity stamps.

Where punched plate is used it will probably be advantageous to punch the holes closer together than for revolving screens, and it may also be better to use thinner plate. The tin plate which has found so much favor in California stamp mills might serve well for jigs.

§ 418. LIFE OF SIEVES.—Table 279 of the life of jig sieves is interesting in a general way, but there will have to be a certain reservation in regard to all comparisons drawn from it, for the conditions differ greatly in the mills. The ore may be hard and cutting, or it may be soft. The water may be acid and corrosive, or not so. Sieves that are overcrowded with work will probably have shorter lives. The action of the mechanism may or may not be severe upon the sieve. The height of the tail and other adjustments may be more or less favorable to long life of sieves.

In Mill 27 the action of the jig mechanism is more severe than that in any other of the mills visited, and the life of the sieves is shorter. In Mills 21, 38 and 43 the life of all the sieves is shorter than the average. In 21 it may be due to the cutting action of pyrite and the corrosion of acid water; in 38 and 43 it may be due to corrosive action of acid and of copper salts. In Mills 16 and 25 the sieves have long life. This may be due to the softness of galena and the lack of corrosive action.

Taking an average of all the lives of sieves that have been obtained from the mills, we find: 108 steel sieves have 68.5 days average life; 177 brass sieves have 243.7 days average life; 39 copper sieves have 213.6 days average life. This suggests the fact that corrosion is much more effective in destroying jig sieves than is attrition, for if this were not so, copper would be the shortest lived and steel the longest. The extraordinary jump between jigs 2 and 3 in Mill 30 seems hardly to be explained in any other way.

A few other points are interesting. Mills 27 and 40 demonstrate that the

life of steel screens is shorter for the finer sieves; Mill 13, however, shows the reverse. Mills 30, 35, 38, 46 and 48 show that the life of brass sieves is longer

TABLE 280.—LINKENBACH'S FIGURES ON JIG SCREENS.

Size of Feed.	Size of Hole in Sieve.	Kind of Sieve.	Life of Sieves. Ten-Hour Shifts.	Length of Plunger Stroke.	Number of Strokes per Minute.
Mm.	Mm.			Mm.	
20–30	10	Steel plate.	450	75	110–120
13–20	6	Steel plate.	300	60	110–120
8–13	4	Steel plate.	250	50	110–120
5–8	3	Brass cloth	100	42	130
3–5	2	Brass cloth	90	35	130
2–3	1½	Brass cloth	75	25	140
½–2	1	Brass cloth	50	15	140

for the finer than for the coarser sieves. Mill 25 shows the same to be true for copper; but Mills 24 and 43 show no regular increase or decrease for copper. Linkenbach's figures are given in Table 280. These figures differ from those of the author, steel lasting longer than brass and coarser screens much longer than finer, probably owing to some difference of condition. The author's figures are, however, taken from a large number of mills.

Kunhardt finds in practice that the head end of the sieve wears faster than

TABLE 281.—SIEVE WIRES AND PRICES.

4-mesh.		8-mesh.		16-mesh.		30-mesh.	
Diameter of Wire in Inches.	Price per Square Foot.	Diameter of Wire in Inches.	Price per Square Foot.	Diameter of Wire in Inches.	Price per Square Foot.	Diameter of Wire in Inches.	Price per Square Foot.
IRON OR STEEL.							
0.120	$0.73	0.063	$0.60	0.028	$0.60	0.016	$0.66
0.08	0.38	0.041	0.32	0.020	0.32	0.014	0.47
0.063	0.27	0.032	0.22	0.016	0.17	0.013	0.31
0.041	0.14	0.023	0.12	0.0135	0.12	0.01	0.23
0.028	0.08	0.017	0.07	0.0095	0.08	0.009	0.19
BRASS OR COPPER.							
0.120	$4.00	0.063	$3.00	0.035	$3.00	0.017	$1.75
0.08	1.75	0.047	1.75	0.025	1.20	0.0145	0.90
0.063	0.85	0.035	0.85	0.02	0.60	0.012	0.55
0.047	0.50	0.028	0.50	0.017	0.45	0.01	0.42
0.032	0.35	0.02	0.35	0.0135	0.30	0.008	0.30

TABLE 282.—COST OF JIG SCREENS.

Abbreviations.—B. W. G.=Birmingham Wire Gauge; C. I.=Cast iron; In.=inch; No.=number.

Mill No.	Material of Screens.	Meshes per Linear In.	Size Wire.	Cost per Square Foot.	Mill No.	Material of Screens.	Meshes per Linear In.	Size Wire.	Cost per Square Foot.
			B. W. G.	Cents.				B. W. G.	Cents.
10	C. I. grating.	½-in. space	¼-in. bars	44	24	Copper cloth	6	18	35
13	Steel cloth...	1¼ inch.	0.22 inch.	40		" "	10	19	57
	" "	¾ inch.	0.15 inch.	45		" "	14	23	35
	" "	½ inch.	0.12 inch.	35		" "	20	26	34
17	Copper cloth	7	15	60	35	Steel plate...	4 mm.	3/16 in. thick.	94
	" "	10	18	60		" "	3 mm.	1/8 in. thick.	94
	" "	12	19	60		Brass cloth..	6	14	80
	" "	16	22	60		" "	7	14	80
21	Steel cloth...	4	16	15		" "	8	16	80
	" "	5	18	16		" "	10	18	80
	" "	10	20	20	40	Steel cloth...	3	19	32
	" "	12	22	20		" "	4	12	28
	" "	16	22	30		" "	5	14	28
24	Copper cloth	4½	14	75		" "	10	18	24

the tail end, and in certain mills the head wears out at two-thirds of the life of the sieve; this part is then patched and the sieve serves the remaining third.

§ 419. COST OF SCREENS.—Owing to the uncertainty of figures quoted from

practice, which may or may not include varying freight charges, the author quotes prices from a trade catalogue. The W. S. Tyler Co. give in their catalogue, prices and sizes of wire for screens from which Table 281 is compiled. These prices are presumably subject to a discount, but they serve to show how much the cost is lessened if smaller wires are used and also to show the relative cost of the different materials. Table 282 shows the cost of screens in a few of the mills. These figures are much more closely in harmony with Tyler's figures than they at first appear. The variation in the thickness of the wire causes the apparent inconsistency.

§ 420. Slope of Jig Sieves.—In this country nearly all the sieves are level. A few exceptions may be noted, all of which seek to even up the conditions of the whole bed. The sieves which slope downward seek to give more load toward the tail to counterbalance the overload at the head, due to fast feeding. The sieves which slope upward toward the tail seek to maintain a thin bottom bed of equal depth all over the sieve, and on this account to use less thickness of bottom bed, and by this thinness and lightness to secure more rapid treatment or greater capacity.

In Mill 14 on No. 1 and No. 2 jigs, the sieves are 40 inches long, 20 inches wide, with tails 8 and 9 inches high respectively. They slope down ½ inch and 1 inch respectively toward the tail. These jigs have also three cross partitions on each sieve, of wrought iron ¼ inch thick, 1½ inches high, to prevent the bottom bed from moving too rapidly toward the tail end.

On Collom jigs (see Figs. 308*a*-308*c*), it has often been found on the tail plunger sieve, that is, the sieve which has the plunger opposite its tail, that the plunger gave more pulsion at its end of the sieve than at the other. To correct this, the sieve has sometimes been given a slight slope toward the tail, thereby lightening the whole bed at the head end and evening the pulsion. On the head plunger sieve it was found that the heavier load on the head of the sieve was sufficient to equalize the pulsion without inclining the sieve. The amount of slope used on the three Collom jigs of Mill 13 is 1 inch in 45 inches, 1 inch in 33 inches and ½ inch in 45 inches respectively.

Many coal jigs use a down slope toward the tail to increase capacity.

In Mill 9 the Henry Faust jig is used, which is the only jig known to the author which has a slope upward. In it the sieves are 42 inches long and 30 inches wide, with a tail board 6 inches high. The sieve is 1 inch higher at the tail end than at the head. The tendency of the blende to be carried forward so as to form a thicker bottom bed of concentrates at the tail than at the head, is in this way balanced, yielding a bottom bed of blende of the same thickness from head to tail. This even thickness enables the jig to be run with a thinner and more active bottom bed. These modifications are probably partly the cause of the great speed of jigging by this jig—80 tons in 24 hours—as compared with that of other jigs of the same class—40 tons in 24 hours.

Foreign practice is indicated by the following notes: Rittinger[17] recommends a slope 5° to 8° downward toward the tail of the jig. Commans[117] recommends a slope downward toward the tail of 1½ inches in 3 feet for coarse jigs and ½ inch for fine jigs. The jigs at Przibram have a gentle slope downward toward the tail[26]. Kunhardt[13] reports a slope of 1 in 36 as being used to help the sand move forward where water is scarce. Linkenbach[15] recommends level sieves. The sieves on the jigs at Clausthal are level[183]. In conclusion, it would seem that the high slope recommended in the early days by Rittinger and others has given way both in this country and in Europe, as a general thing, to the level sieve.

§ 421. Methods of Feeding Jigs.—In most cases the material is fed to the jig at the head end of the first sieve and passes over it and the succeeding sieves.

In three mills, however—16 No. 2 jig, 24 No. 2 jig and 28 No. 1 and No. 2 jigs—the material is fed at the middle cross partition and passes in both directions. On many coal jigs which have but one sieve, the material is fed at the longitudinal partition between the plunger and sieve.

It is important that the feed to jigs be steady. A jig with an automatic discharge for coarse concentrates, if fed irregularly, will, unless very carefully watched, when overfed, send good ore into the tailings and, when underfed, send waste into the concentrates, owing to the fact that these discharges are sluggish in responding to changed conditions; in fact, they cannot respond sufficiently to meet any considerable change. A jig which discharges its concentrates through a bottom bed, if overfed will send good ore into the tailings; if underfed it may send a little waste into the heads, but it is not so likely to do this as in the above instance.

The rate of feeding of jigs is controlled by the fact that they are nearly always fed from revolving screens, classifiers, or other jigs, all of which machines deliver their products at an almost uniform rate. The rate of feeding may also be controlled by the use of automatic feeders. Thus, at Clausthal in the Harz, hoppers are used for feeding jigs with dry, sized products down to 1 mm. The hopper has its discharging slot at the head end of the sieve extending nearly, if not quite its whole width (see Fig. 337). The sand works down through the slot as fast as the jigging work takes it away. The width of the slot is adjustable to suit the capacity of the jig on the material treated. A hopper so run is an automatic feeder. This device is quite common in this country on coal jigs which have only one sieve and are fed at the partition between the plunger and sieve. At Przibram an automatic feeder, consisting of hopper and shaking feed sole, similar to the Tulloch feeder in principle, is used.

It is important, not only that a jig be fed regularly, but that the material be distributed over the whole width of the sieve, so that every part of the jig may have full jigging duty to do. It is also important that the feed material should come to the jig in a quiet, gentle manner, so as not to disturb the whole bed, as would be the case with a swift plunging current. To effect both these results, aprons or feed boxes are employed. The aprons used at Lake Superior are usually of wood, covered with ⅛-inch iron plate, of the width of the sieve and about one and one-half times as long as they are wide, with a slope of 7°, or 1½ inches to 1 foot, entering the sieve box exactly level with the top of the tailboard. This form has the advantage that it can distribute evenly and gently the mixed sand and water falling upon it. Steeper aprons, up to 45° slope, are shown in the catalogues of some of the large manufacturers (see Fig. 341*b*), but the jigs could hardly be fed as gently with this form.

The feed box (see Fig. 306*a*), is a very common method of feeding the jig. It consists of a little box *S* running across the head end of the jig outside, with an overflow slot cut in its side through which the sand flows to the whole width of the jig. The bottom of this slot is generally horizontal and level with the top of the tail of the sieve. In Mill 30 it slopes down and enters 3½ inches above the tail. The bottom of the box is from 2 to 6 inches, more or less, below the slot and in it rests always a bed of sand which prevents the bottom from wearing out.

When feed hoppers are used, as previously described, aprons or feed boxes are not necessary.

Mill 25 feeds its jigs by a 2-inch pipe, discharging nearly horizontally at a height of 3½ inches above the tail level.

§ 422. Drop Between Sieves.—The tailboard or partition between sieves, should always have a horizontal straight edge, in order that the waste sand may overflow with equal speed from all parts of the preceding sieve, and it should be

beveled, sloping downward toward the following sieve, so as to clear itself freely, thereby forming the feed apron of that sieve. The almost universal construction is shown in Fig. 306*a*. In the coarse jig of Mill 15, however, the tailboard is in the form of a gable, sloping toward each sieve. The ultimate purpose of this drop between sieves is to facilitate the forward flow of the sand. Coarse jigs need more drop, because the larger lumps are less mobile than the finer sands; that is to say, they do not become level, drop into layers, or move forward toward the tail with the same speed as finer sizes.

From Table 271, we find: Mill 40 uses 2½ inches drop throughout. Mill 20 uses 2¼ inches drop throughout. Mills 10 and 21 use 2 inches drop throughout. Mills 16, 17, 26, 27 and 31 use 1½ inches drop throughout. Mills 22, 28, 37 and 92 use 1 inch drop throughout. Mills 15, 30, 32, 35, 39, 41 and 86 use a descending drop from coarse to fine; of these, Mill 32 has further a descending scale on each jig from the first to the last sieve. Mills 24, 25 and 38 show irregularity in the amount of drop. The blende jigs in Southwest Missouri (Mills 9 and 10) use 1½ to 2 inches on the No. 1, or roughing jigs, and for a four-sieve No. 2, or finishing jig, the drops are ¾, ⅜ and 0 inch respectively. Kunhardt recommends 1 to 2 inches for coarse and ⅔, ⅓ and 0 inch respectively for a four-sieve fine jig. Linkenbach recommends 40 mm. for coarse jigs, 20 mm. for fine.

It is clear from the above summary that a large proportion of mill men (thirteen out of twenty-three), think it better to have one standard drop sufficient for the coarsest size, than to vary it. It is significant that the four mills which use only 1-inch drop throughout are first class modern mills.

§ 423. Height of Tailboard.—The height of the tailboard above the sieve will be the measure of the depth of the whole bed. The height to be used dedends upon the difference in the specific gravities of the valuable mineral and the waste, and upon the size of the grain. A greater difference in specific gravity,

FIG. 332.

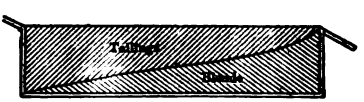

FIG. 333.

that is, an easy separation, requires less depth because the bottom bed holds its level better than when the difference in specific gravity is less (see Figs. 332 and 333). Compare in Table 271, Mills 22, 24, 27, 28 and 30, jigging galena, with Mills 9, 10, 12 and 14, jigging blende or pyrite.

The coarser grain requires a greater height of tail than the finer, in order to have a sufficient number of particles in vertical column. A jig with a tail only 2 inches high, but jigging 2-mm. sand, would have a whole bed twenty-five grains deep. On the other hand, a jig treating 38-mm. lumps with a tail 6½ inches high, will have a whole bed only four lumps deep.

A study of Table 271, of mill practice, taken from thirty-five mills, brings out the following points: A descending scale, that is higher tailboards on the coarse jigs and lower on the fine, is used in twenty-one mills. In Mill 30, using Harz jigs, and 48, using Collom jigs, the figures show that great care is taken of this adjustment. A uniform height, approximately, for all jigs, is used in ten mills. A rising scale, that is the finer with higher tailboards than the coarser, is used in two mills, 14 and 86. Irregularity is found in two mills, 24 and 88.

The last sieve with a higher tailboard than the previous sieves on a multi-sieve jig, or with tailboards increasing in height from the first sieve toward the last one on a multi-sieve jig, in a more or less perfect series, occurs in Mill 30. The exact reverse is found in Mill 18. There seems to be a logical reason for having

the tail of the last sieve higher than those of the earlier sieves, because the heaviest of the ore has been all taken out, and jigging lighter material needs a deeper whole bed.

The extremes of height are found in Mills 12 and 14, which have the highest tails and in 20, which has the lowest and which uses a bottom bed of lead bullets which are very heavy.

The Collom jigs, not including the modified forms, will be noticed to have very much lower tailboards than the Harz; the maximum is 3½ inches in height in Mills 35 and 42, and 3 inches at Lake Superior. On the other hand, with a few exceptions, mostly on the finest jigs, the Harz jigs have tailboards over 3½ inches in height. The reason for this is that the positive eccentric and large plunger of the Harz give a quiet, easy action, while the Collom jig, if loaded up with a whole bed 4 to 6 inches deep, would pound badly and be hard upon the mechanism. Mill 13 is an exception. There the Collom jig has been very much modified as to its spring and the opening between plunger and sieve compartments, to increase its power and avoid the pound. Mill 43 uses a 4½-inch tail, but to do so, has joined the hammers of Collom jigs directly to the plunger by connecting rods, giving them a positive motion.

§ 424. Jigging with a Stay Box.—The following is given by Kunhardt as European practice: "To economize in the use of water and prevent the fine material from being carried off the jig too quickly, the water in such fine jigs is almost always stayed; that is, the tailings are discharged through a long slit in the end board of the jig, beyond and immediately adjoining which, there is a stay box. The latter may have the form of a small, hydraulic classifier, which delivers the heavier material through the bottom and the lighter stuff as overflow. The overflow level is set at least 2 inches higher than the discharge slit of the jig, so as to produce a slight head pressure and a deep layer of water over the whole bed, with a tendency to check the main current of the jig. In another form of stay box the jig discharge is similarly made through a slit a couple of inches below the water surface, while in the stay box there is a float from which hangs a plug that regulates the discharge opening in the bottom, according to the water level in the jig. The sands and meals sink to the bottom, and escape, while most of the water is retained."

The stay box gives a freer, looser whole bed and one in which the various layers find their level better than without it. This makes up for the lack of the carrying current for transporting forward the quartz, and avoids carrying unfinished fine ore into the tailings. It does not appear to be used in this country.

C. M. Rolker[23] (1877), speaks of the use at Lake Superior of flat cross bars on edge, dipping slightly into the pulp, to cause the carrying current to pass beneath them and thereby to break up the hardened cake and enable the fine copper to settle.

§ 425. Method of Running Jigs.—The work of the jig is on one of three lines: A. The jig makes coarse concentrates and tailings, with a small amount of hutch incidentally from attrition of the large grains. B. The jig makes coarse concentrates, hutch and tailings. C. The jig makes only hutch and tailings.

The work done by jigs is shown in Table 283, and the class in which it belongs, whether A, B or C, according to the above classification, is given in the third column. The table shows that of 300 jigs there are 76 in class A, 106 in class B, 116 in class C, 1 doubtful, either A or B, and 1 with first sieve C and second sieve B. In the Freiberg district, Germany, in 1893, out of 126 jigs, 94 were in class A.

The following summary of the table shows the 300 jigs divided into groups according to the material which is treated and each group subdivided into the separate classes:

TABLE 283.—PURPOSE AND ADJUSTMENTS OF JIGS.

NOTE.—In some cases several values will be found for one jig. These are for the different sieves of the

Abbreviations.—Aut.=Automatic; Aut. dis.=Automatic discharge; b. cl.=box classifier; B'low=Below; dis.=discharge; dist.=distributor; Gr.=Graded from; H.=Hutches of; h.=hutch; H. m. or Hunt. m.=Hunt-Kieve; L.=Lead; lbs.=pounds; m.=mill; ma.=machine; Max.=Maximum; No.=Number; Ov.=Oversize of; st.=stamp; st. st.=steam stamp; T.=Tailings of; tr.=trommel; Tr. ma.=Trunking machine; Un.=Undersize;

Mill Number.	Jig Number.	Class of Jig. (a)	Material of Feed.	Size of Feed.	Net Diameter of Screen Hole.	Ratio of Diameter of Screen Hole to Diameter of Feed.	Material of Bottom Bed.	Thickness of Bed.	Ratio of Diameter of Bed Material to Diameter of Feed. (b)
				Mm.	Mm.			Inches.	
9	1	B	Undersize of tr....	.....	.....	.....	Makes own bed.....	.....	.....
	2	B	Hutches No. 1 jig..	.....	.....	.....	" "	.....	.....
10	1	B	Undersize No. 1 tr.	12.7 to 0	3.18	0.25 to inf.	" "	.....	.....
	2	B	Hutches No. 1 jig..	3.18 to 0	.....	.....	" "	.....	.....
12	4	B	Hutch of No. 2 jig.	12 mesh to 0	16 mesh.	.....	" "	.....	.....
13	1	C	From No. 1 tr.....	19.1 to 12.7	31.75	1.7 to 2.5	Hand-picked ore....	1¼	.....
	2	C	"	12.7 to 6.35	19.05	1.5 to 3.0	" "	1	.....
	3	C	"	6.35 to 0	6.35	1.0 to inf.	Hutch No. 2 jig, 12.7 to 6.35 mm.	⅝	2.0
14	1	C	From sc. and p. t..	22.2 to 9.5	21.59	1.0 to 2.3	50.8-mm. stuff.....	3	2.3
	2	C	" " ..	9.5 to 0	9.53	1.0 to inf.	Hutch No. 1 jig, 22.2 to 9.5 mm.	3	2.3
15	1	A	Oversize No. 1 tr...	Over 12.4	3.58	— to 0.29	Makes own bed.....	.....	.....
	2	A	Oversize No. 2 tr...	12.4 to 4.7	2.59	0.21 to 0.55	" "	.....	.....
	3	A	Oversize No. 3 tr...	4.7 to 2.3	1.30	0.28 to 0.57	" "	.....	.....
	4	B	1st sp. No. 1 hy. cl.	2.3 to 0	0.89	0.39 to inf.	" "	.....	.....
	5	C	2d sp. of same.....	2.3 to 0	25 mesh.	.....	1st discharge No. 4 jig	1	.....
16	1	A	From trommel....	20 to 10	4.76	0.24 to 0.48	Makes own bed.....	.....	.....
	2	A	"	10 to 5 on 1st two sieves, 5 to 2 on last two sieves.	1.80	0.18 to 0.36; 0.36 to 0.90	" "	.....	.....
	3	B	"	2 to 0	0.89; 1.30; 1.30	0.45 to inf.; 0.65 to "; 0.65 to "	" "	.....	.....
17	1	A	From No. 3 tr.....	10 to 7	1.80	0.18 to 0.26	" "	.....	.....
	2	A	"	7 to 5	1.80	0.26 to 0.36	" "	.....	.....
	3	A	From No. 4 tr....	5 to 3½ or (g) 3½ to 2	1.30	0.26 to 0.37; 0.37 to 0.65	" "	.....	.....
	4	B	1st sp. No. 1 hy. cl.	2 to 0	1.04	0.52 to inf.	" "	.....	.....
	5	B	1st sp. No. 2 hy. cl.	2 to 0	0.89	.....	" "	.....	.....
	6	C	2d spigot of same..	2 to 0	0.89	.....	.....	.....	.....
	7	C	Overflow of same..	2 to 0	.....	.....	.....	.....	.....
18	1	C	Oversize No. 2 tr...	4 to 6 mesh.	4.24	.....	.....	.....	.....
	2	C	Oversize No. 3 tr...	6 to 8 mesh.	3.00	.....	.....	.....	.....
	3	C	Oversize No. 4 tr...	8 to 10 mesh.	1.98	.....	.....	.....	.....
	4	C	(h)	10 mesh to 0	1.65	.....	.....	.....	.....
	5	C	3d sp. No. 1 hy. cl.	10 mesh to 0	1.22	.....	.....	.....	.....
19	1	C	Oversize No. 2 tr...	3 to 5 mesh.	.....	.....	.....	.....	.....
	2	C	Oversize No. 3 tr...	5 to 8 mesh.	.....	.....	.....	.....	.....
	3	C	Oversize No. 4 tr...	8 to 10 mesh.	.....	.....	.....	.....	.....
	4	C	(i)	10 mesh to 0	.....	.....	.....	.....	.....

(a) Class A makes coarse concentrates and tailings; Class B makes coarse concentrates, hutches and tail (c) Very similar to those of Mill 10. (e) The second sieve of this jig has a double discharge of which the lower discharges respectively of the double discharge on the second sieve. (g) These are treated separately, draulic classifier. (i) First, second and third spigots of No. 1 hydraulic classifier.

TABLE 283.—PURPOSE AND ADJUSTMENTS OF JIGS.

jig taken in order from the head to the tail.

Br.=Bryan; br'k'r=breakers; c.=concentrates; C. c.=Coarse concentrates; Cl.=Cleaning; cl.=classifier; ington mill; Hunt.=Huntington; hy.=hydraulic; hy. cl.=hydraulic classifier; inf.=infinity; j.=jig; K.= pr. or preced'g=preceding; p. t.=picking table; r.=rolls; s.=sieve; sc.=screen; sm.=smelter; sp.=spigot; unw.=unwaterer or unwatered; Unw. b.=Unwatering box; Z.=Zinc.

Mill Number.	Jig Number.	Coarse Concentrates. How Removed.	Destination of Products. Coarse Concentrates to	Hutch Products to	Tailings to	Amount of Plunger Throw.	No. of Throws per Minute.	Automatic Discharge. Height of Gate.	Height of Dam.	Ratio of Height of Gate to Max. Grain of Feed.	Ratio of Height of Dam to Height of Tail.
						Inches.		In.	In.		
9	1	Aut. discharge..	(c)	No. 2 jig...	Waste.....	¾	130	.....	.....	.....	.....
	2	" ...	(c)	(c)	"	.....	170	.....	.....	.....	.....
10	1	"	(1) Lead sm.... (2) (3) Z. sm. or r. (4) (5) Rolls.....	No. 2 jig...	" ...	Graded from ⅝ to ⅝	173	.....	.....	.....	.....
	2	"	(1) Lead smelter.. (2) (3) Z. smelter... (4) (5) Rolls..... (6)	(1) Lead sm. (2) (3) (4) (5) (6) Z. sm..	" ...	Graded from $\frac{7}{16}$ to $\frac{9}{16}$	275	.....	.....	.....	.....
12	4	By skimming....	Smelter.....	Smelter....	"	.....	.....	.....	.....	.....	.....
13	1	None.....	None.....	"	"	1¾	84	.....	.....	.....	.....
	2	"	"	"	"	1¾	84	.....	.....	.....	.....
	3	"	"	"	"	1¾	84	.....	.....	.....	.....
14	1	"	"	"	"	1⅛	128	.....	.....	.....	.....
	2	"	"	"	"	$1\frac{9}{16}$	128	.....	.....	.....	.....
15	1	Automatic discharge.	(1) (2) (3) Smelter.... (4) Rolls.....	(1) (2) (3) Sm.... (4) Rolls....	" ...	Graded from 2 to 1	144	1½	3	B'low 3.07	0.60
	2	"	Same as preced'g	Same as pr.	"	1	190	.....	.....	.....	.....
	3	"	"	"	"	½	210	.....	.....	.....	.....
	4	(1) Aut. dis..... (2) None..... (3) " ..... (4) "	(1) Smelter..... (2) None..... (3) " ..... (4) "	"	"	⅝	320	.....	.....	.....	.....
	5	None.....	None.....	Smelter....	"	¼	335	.....	.....	.....	.....
16	1	Aut. discharge..	Smelter.....	Smelter....	Rolls.....	2¼	100	2½	3½	3.17	0.70
	2	(1) " ... (2) " ... (3) " ... (4) " ...	(1) Smelter..... (2) Rolls..... (3) Smelter..... (4) Smelter.....	"	Waste.....	1.71	140	⅝ 1 ½	3 2½ 2	1.91 2.54 2.54	0.75 0.63 0.75
	3	(1) Aut. dis.... (2) None..... (3) "	(1) Smelter..... (2) None..... (3) "	"	" ...	¼ ⅞ ¾ $\frac{9}{16}$	200	½	2½	6.35	0.63
17	1	Aut. discharge.	(1) Lead mill..... (2) (e)	(1) Lead sm. (2) Zinc sm.	"	1	140	¾ f¾ f2	2 f2 f2½	1.91 1.91 5.08	0.50 0.50 0.63
	2	"	(1) Lead mill..... (2) (3) Zinc smelter. (4) Rolls.....	(1) L. mill.. (2) (3) (4) Z. sm..	"	1	140	¾	2	2.72	0.50
	3	Aut. discharge.	(1) Lead mill..... (2) (3) Zinc smelter. (4) Rolls.....	(1) L. mill.. (2) (3) (4) Z. sm..	"	1	140	¾	2	3.81 5.44	0.50
	4	" ...	Same as preced'g	Same as pr.	"	½, ⅝, ⅝, ¼	180	¾	2	9.51	0.57
	5	" ...	"	"	"	½, ⅝, ⅝, ¼	200	¾	2	.....	0.57
	6	None.....	None.....	"	"	¼, ¼, $\frac{3}{16}$, $\frac{3}{16}$	200	.....	.....	.....	.....
	7	"	"	(1) L. mill.. (2) (3) Z. sm..	" ...	$\frac{3}{16}$, $\frac{3}{16}$, ⅛	200	.....	.....	.....	.....
18	1	"	"	Smelter....	"	1¼, 1¼, ⅞, 1	240	.....	.....	.....	.....
	2	"	"	"	"	⅞, ¾, ¾, ⅝	245	.....	.....	.....	.....
	3	"	"	"	"	¾, ¾, ½, $\frac{17}{16}$	248	.....	.....	.....	.....
	4	"	"	"	"	Gr. ⅝ to ¼	248	.....	.....	.....	.....
	5	"	"	"	"	Gr. ½ to ¼	250	.....	.....	.....	.....
19	1	"	"	"	"	.....	.....	.....	.....	.....	.....
	2	"	"	"	"	.....	.....	.....	.....	.....	.....
	3	"	"	"	"	.....	.....	.....	.....	.....	.....
	4	"	"	"	"	.....	.....	.....	.....	.....	.....

ings; Class C makes hutches and tailings. (*b*) These are the ratios of the maximum grains of each material. upper discharge goes to rolls and the lower goes to smelter. (*f*) These figures are for the upper and a little catch basin being used to hold the product that is waiting. (*h*) First and second spigots of No. 1 hy-

TABLE 283.—PURPOSE AND ADJUSTMENTS OF JIGS.—*Continued.*

NOTE.—In some cases several values will be found for one jig. These are the different sieves of the

Abbreviations.—Aut.=Automatic; Aut. dis.=Automatic discharge; b. cl.=box classifier; B'low=Below; dis.=discharge; dist.=distributor; Gr.=Graded from; H.=Hutches of; h.=hutch; H. m. or Hunt. m.=Hunt-Kieve; L.=Lead; lbs.=pounds; m.=mill; ma.=machine; Max.=Maximum; No.=Number; Ov.=Oversize of; st.=stamp; st. st.=steam stamp; T.=Tailings of; tr.=trommel; Tr. ma.=Trunking machine; Un.=Undersize;

Mill Number.	Jig Number.	Class of Jig. (a)	Material of Feed.	Size of Feed.	Net Diameter of Screen Hole.	Ratio of Diameter of Screen Hole to Diameter of Feed.	Material of Bottom Bed.	Thickness of Bed.	Ratio of Diameter of Bed Material to Diameter of Feed. (b)
				Mm.	Mm.			Inches.	
19	5	C	4th & 5th sp. same.	10 mesh to 0	.....	.....	.....	.....	.....
	6	C	6th & 7th sp. same.	10 mesh to 0	.....	.....	.....	.....	.....
20	1	C	Oversize No. 3 tr...	6.4 to 3.7	6.40 6.40 8.59	1 to 1.7 1 to 1.7 1.3 to 2.3	Lead shot, 11.2 mm. diameter.	⅛	1.9
	2	C	Oversize No. 4 tr...	3.7 to 2.7	5.41 5.41 6.40	1.5 to 2.0 1.5 to 2.0 1.7 to 2.4	"	.....	3.0
	3	C	Oversize No. 5 tr...	2.7 to 1.5	3.68 2.74 2.74	1.4 to 2.4 1.0 to 1.8 1.0 to 1.8	Worn shot of jigs 1 and 2 with 4.6-mm. shot added.	.....	1.7
	4	C	Spigot No. 1 hy. cl.	1.5 to 0	1.52	1.0 to inf.	"	.....	3.1
	5	C	Undersize No. 6 tr.	1.5 to 0	1.52	1.0 to "	"	.....	3.1
21	1	B	Oversize No 2 tr...	4.60 to 3.48	4.70	1.0 to 1.4	Makes own bed.....	(*j*)	.....
	2	C	Oversize No. 3 tr...	3.48 to 1.22	3.84	1.1 to 3.1	Hutch No. 1 jig, 4.60 to 3.48 mm.	1⅛	1.3
	3	C	1st sp. No. 1 hy. cl.	1.22 to 0	1.65	1.4 to inf.	Hutch No. 2 jig, 3.48 to 1.22 mm.	1⅛	2.9
	4	C	2d spigot of same..	1.22 to 0	1.40	.....	"	1⅛	.....
	5	C	1st sp. No. 2 hy cl..	0.64 to 0	0.89	1.4 to inf.	Hutch No. 3 jig, 1.22 mm. to 0.	1¼	1.9
	6	C	" "	0.64 to 0	0.89	.....	"	1⅛, 1	.....
22	1	A	Oversize No. 1 tr..	Over 12	9.30	— to 0.78	Makes own bed.....	.....	.....
	2	B	Ov. No. 2 tr.... H. No. 1 jig.....	12 to 6 9.30 to 0	5.05 3.76	0.42 to 0.84 0.31 to inf.	"	.....	.....
	3	A	Oversize No. 3 tr..	6 to 3	2.77 2.18	0.46 to 0.92 0.36 to 0.73	"	.....	.....
	4	B	1st sp. No. 1 hy. cl.	3 to 0	1.80 1.55 1.55	0.60 to inf. 0.52 to " 0.52 to "	"	.....	.....
	5	C	2d spigot of same..	3 to 0	1.80 1.55 1.55	.....	Hutch No. 3 jig, 2.77 mm. to 0.	.....	.....
23	1	A	Undersize second half No. 1 tr...	7	10 mesh.	.....	Makes own bed.....	.....	.....
	2	A	Oversize No. 2 tr...	7 to 5	10 mesh.	.....	"	.....	.....
	3	A	Oversize No. 3 tr..	5 to 3	10 mesh.	.....	"	.....	.....
	4	B	Undersize No. 3 tr.	3 to 0	10 mesh.	.....	"	.....	.....
	5	C	1st and 2d spigots No. 1 hydraulic classifier.	3 to 0	10 mesh.	.....	Discharge of No. 3 jig, 5 to 3 mm.	.....	1.7
	6	C	3d sp. of same.....	3 to 0	10 mesh.	.....	"	.....	.....
24	1	A	Un. No. 1B tr.....	10 to 7	1.47	0.15 to 0.21	Makes own bed.....	.....	.....
	2	A	From No. 3 tr.....	7 to 5	1.47	0.21 to 0.29	"	.....	.....
	3	A	" "	5 to 3	1.47	0.29 to 0.49	"	.....	.....
	4	C B	1st sp. No. 1 hy. cl.	3 to 0	3.53 1.17	1.3 to inf. 0.39 to "	1st sieve has bed put on; 2d makes own.	1-2	.....
	5	B	(*r*)	3 to 0	1.47	.....	Makes own bed.....	2	.....
	6	C	1st sp. No. 1 b. cl. goes to 2 jigs; 2d sp. to 2 other jigs	3 to 0	1.17 1.17 0.81	.....	1st s. has 1st h. No. 4 jig, 3 mm. to 0; 2d & 3d have 2d h. No. 4 jig, 1.17 mm. to 0.	1-1½ 2-2½ 1½	.....

(*a*) Class A makes coarse concentrates and tailings; Class B makes coarse concentrates, hutches and tail-
(*j*) 2½ inches and less. (*k*) Skimmed when the bottom bed becomes 2½ inches deep. (*l*) Huntington mill by
charges but they are not used. (*p*) ⅛ inch on the two small jigs, 1 1/16 inches on the large jig. (*q*) This is a Par-
sets of figures are for the two coarse jigs and the two fine jigs respectively.

TABLE 283.—PURPOSE AND ADJUSTMENTS OF JIGS.—*Continued.*

jig taken in order from the head to the tail.

Br.=Bryan; br'k'r=breakers; c.=concentrates; C. c.=Coarse concentrates; Cl.=Cleaning; cl.=classifier; ington mill; Hunt.=Huntington; hy.=hydraulic; hy. cl.=hydraulic classifier; inf.=infinity; j.=jig; K.= pr. or preced'g=preceding; p. t.=picking table; r.=rolls; s.=sieve; sc.=screen; sm.=smelter; sp.=spigot; unw.=unwaterer or unwatered; Unw. b.=Unwatering box; Z.=Zinc.

Mill Number.	Jig Number.	Coarse Concentrates. How Removed.	Destination of Products. Coarse Concentrates to	Hutch Products to	Tailings to	Amount of Plunger Throw.	No. of Throws per Minute.	Automatic Discharge. Height of Gate.	Height of Dam.	Ratio of Height of Gate to Max. Grain of Feed.	Ratio of Height of Dam to Height of Tail.
						Inches.		In.	In.		
19	5	None	None	Smelter	Waste						
	6	"	"	"	"						
20	1	"	"	(1) Sm. (2) Sm. (3) No. 3 r.	"	⅛ ⅞ ⅞	250				
	2	"	"	(1) Sm (2) Sm (3) No. 3 r.	"	⅝ ⅝ ¼	300				
	3	"	"	(1) Sm (2) Sm (3) No. 3 r.	"	¼	350				
	4	"	"	Smelter	"	¼, ¼, 5/16	400				
	5	"	"	"	"	¼, 7/16	400				
21	1	(k)	None	(1) Sm (2) Sm (3) Sm. or (l)	(l)	⅝ ⅞ ⅞	268				
	2	None	"	(1) Sm (2) Sm (3) Sm (4) Sm. or (l)	(l)	⅞ ⅞ 7/16 ⅝	268				
	3	"	"	Same as pr.	(l)	Gr. 5/32 to ⅛	230				
	4	"	"	"	(l)	Gr. 5/32 to ⅛	230				
	5	"	"	Smelter	Waste	¼	250				
	6	"	"	"	"	¼	250				
22	1	Automatic discharges.	(1) Trunking ma. (2) Rolls (3) Rolls	No. 2 jig.	"	2 1¾ 1⅞	160	1¾ 2 3	3 3 3	(m) 4.23 6.35	0.55 0.55 0.55
	2	"	(1) Trunking ma. (2) Rolls	Tr. ma	"	1	127	1¾ 2½	3 3	3.70 5.29	0.55 0.55
	3	"	(1) Trunking ma. (2) Rolls	"	"	⅜ ⅝	150	⅜ ⅝ ⅞ 1⅛ 1¼ 1⅞ ⅞ ⅞ 1⅛	2¼ 4¼ 3 3 3 2⅝ 3⅛ 3¼	3.18 11.64 7.41 12.70 14.83	0.45 0.77 0.60 0.60 0.60 0.53 0.63 0.72
	4	(1) Aut. dis. (2) (n) (3)	(1) Trunking ma. (2) None (3)	"	"	⅝	163				
	5	(o)	None	"	"	⅝	163				
23	1	Automatic discharges.	(1) Smelter (2) Rolls	(1) Smelter. (2) Rolls	"						
	2	"	(1) Smelter (2) Rolls	(1) Smelter. (2) Rolls	"						
	3	"	(1) Smelter (2) Rolls	(1) Smelter. (2) Rolls	"						
	4	"	Smelter	Smelter	No. 1 hy. cl.						
	5	None	None	(1) Sm (2) Sm (3) Rolls	Waste						
	6	"	"	(1) Sm (2) Sm (3) Rolls	"						
24	1	Automatic discharges.	(1) Smelter (2) Rolls	Rolls	"	1¼	120	1 7/16 1 1/16	2½ 2½	3.65 3.02	0.63 0.53
	2	"	(1) Smelter (2) Rolls	"	"	¾ ¾	130	¾ ¾	2½ 2½	2.72 5.90	0.56 0.59
	3	"	(1) Smelter (2) Rolls	"	"	1	125	¾ 1 5/16	2½ 2½	3.81 8.26	0.56 0.59
	4	(1) None (2) (n)	(1) None (2) Smelter	(1) Smelter. (2) Rolls	"	(q) 1¾	140				
	5	(s)	Smelter	Smelter	No. 1 b. cl.	3/16	184				
	6	None	None	(1) Smelter. (2) Sm. or No. 1 b.cl. (3) No. 1 b. cl	Waste	¼, ¼, 5/16 (t) ⅛, 3/16, ⅛	200 (t) 280				

ings; Class C makes hutches and tailings. (*b*) These are the ratios of the maximum grains of each material. unwaterer. (*m*) Below 3.70. (*n*) Discharges only when bottom bed gets too deep. (*o*) Has automatic dis- sons jig, see § 388. (*r*) Second spigot and overflow of the same. (*s*) Probably by skimming. (*t*) These two

TABLE 283.—PURPOSE AND ADJUSTMENTS OF JIGS.—*Continued.*

NOTE.—In some cases several values will be found for one jig. These are for the different sieves of the

Abbreviations.—Aut.=Automatic; Aut. dis.=Automatic discharge; b. cl.=box classifier; B'low=Below; dis.=discharge; dist.=distributor; Gr.=Graded from; H.=Hutches of; h.=hutch; H. m. or Hunt. m.=Hunt-Kieve; L.=Lead; lbs.=pounds; m.=mill; ma.=machine; Max.=Maximum; No.=Number; Ov.=Oversize of; st.=stamp; st. st.=steam stamp; T.=Tailings of; tr.=trommel; Tr. ma.=Trunking machine; Un.=Undersize;

Mill Number.	Jig Number.	Class of Jig. (a)	Material of Feed.	Size of Feed.	Net Diameter of Screen Hole.	Ratio of Diameter of Screen Hole to Diameter of Feed.	Material of Bottom Bed.	Thickness of Bed.	Ratio of Diameter of Bed Material to Diameter of Feed. (b)
				Mm.	Mm.			Inches.	
25	1	B	Undersize No. 1 tr.	6 to 0	2.77x2.97	0.5 to inf.	Makes own bed.....	2-4	.....
	2	C	From dist. after r.	.....	7¼x3 mesh.	.....	C.c.No.1 jig, 6 to 3mm	3	.....
	3	C	(w)	3 to 0	7¼x8 mesh.	.....	"	3	2.0
26	1	C	Oversize No. 3 tr...	5.7 to 3.6	5.69	1.0 to 1.6	About 33 lbs. lead shot on each sieve, 11.2 mm. diameter	.....	2.0
	2	C	Oversize No. 4 tr...	3.6 to 2.1	5.41	1.5 to 2.6	"	.....	3.1
	3	C	Oversize No. 5 tr...	2.1 to 1.5	3.58	1.7 to 2.4	"	.....	5.3
	4	C	Oversize No. 6 tr...	1.5 to 0.9	2.13	1.4 to 2.3	(x)	.....	4.7 & 2.4
	5	C	1st. sp. No. 1 hy. cl.	0.91 to 0	2.13	2.3 to inf.	(x)	.....	7.8 & 4.0
	6	C	2d spigot of same..	0.91 to 0	2.13	.....	(x)	.....	.....
27	1	A	From No. 1 tr.....	38.1 to 25.4	5.08	0.13 to 0.20	Makes own bed.....	.....	.....
	2	A	"	25.4 to 15.9	5.08	0.20 to 0.32	"	.....	.....
	3	A	Oversize No. 3 tr...	15.9 to 12.7	2.74	0.17 to 0.22	"	.....	.....
	4	A	Oversive No. 4 tr...	12.7 to 10.3	2.74	0.22 to 0.27	"	.....	.....
	5	A	Oversize No. 5 tr...	10.3 to 8.3	1.57	0.15 to 0.19	"	.....	.....
	6	A	Oversize No. 6 tr...	8.3 to 4.4	1.57	0.19 to 0.36	"	.....	.....
	7	A	Oversize No. 7 tr...	4.4 to 2.8	1.50	0.34 to 0.54	"	.....	.....
	8	A	Oversize No. 8 tr...	2.8 to 2.0	0.89	0.32 to 0.45	"	.....	.....
	9	B	(z)	2.0 to 0	0.89	0.45 to inf.	"	.....	.....
	10	C	Unw. 2d sp. same..	2.0 to 0	0.69	.....	C.c.No.8 j. 2.8-2.0 mm	1¼-2	.....
	11	C	Unw. 3d sp. same..	2.0 to 0	0.69	.....	"	1¼-2	.....
28	1	A	From No. 1 tr.....	40 to 25	4.75	0.12 to 0.19	Makes own bed.....	.....	.....
	2	A	"	25 to 16	4.75	0.19 to 0.30	"	.....	.....
	3	A	Oversize No. 3 tr...	16 to 12	4.75	0.30 to 0.40	"	.....	.....
	4	A	Oversize No. 4 tr...	12 to 8	3.18	0.27 to 0.40	"	.....	.....
	5	A	Oversize No. 5 tr...	8 to 5	3.18	0.40 to 0.64	"	.....	.....
	6	A	Oversize No. 6 tr...	5 to 3.5	1.04	0.21 to 0.30	"	.....	.....
	7	A	Oversize No. 7 tr ..	3.5 to 2	0.89	0.25 to 0.45	"	.....	.....
	8	A	Oversize No. 9 tr...	3.5 to 2	1.04	0.30 to 0.52	"	.....	.....
	9	C	Unw. 1st spigot No. 1 hy. cl....	2 to 0	3.18	1.6 to inf.	C.c. Nos. 5 & 6 jigs, 8 to 3.5 mm.	2-2½	4
	10	C	Unw. 2d sp. same..	2 to 0	3.18	.....	"	2-2½	.....
	11	C	Unw. 3d sp. same..	2 to 0	1.04	.....	"	2-2½	.....
	12	C	Unw. 4th sp. same.	2 to 0	1.04	.....	C.c.No.7 jig, 3.5-2 mm	2	.....
29	1	B	Oversize No. 3 tr...	6 to 4	4.70	0.78 to 1.2	Makes own bed.....	.....	.....
	2	B	Oversize No. 4 tr...	4 to 3	3.43	0.9 to 1.1	"	.....	.....
	3	A	Oversize No. 5 tr...	3 to 2.5	1.59	0.51 to 0.61	"	.....	.....
	4	B	1st sp. No. 1 hy. cl.	2.5 to 0	2.5	1.0 to inf.	"	.....	.....
	5	C	2d spigot of same..	2.5 to 0	2	.....	C.c. No. 4 jig, 2.5 mm.	.....	.....
30	1	A	From No. 1 tr.... .	25 to 15	2.31	0.09 to 0.15	Makes own bed.....	.....	.....
	2	A	"	15 to 10	2.31	0.15 to 0.23	"	.....	.....
	3	A	From No. 2 tr.....	10 to 7	2.31 1.07 1.07	0.23 to 0.33 0.11 to 0.15 0.11 to 0.15	"	.....	.....
	4	A	"	7 to 5	0.89	0.13 to 0.18	"	.....	.....
	5	A	"	5 to 3	0.89	0.18 to 0.30	"	.....	.....

(a) Class A makes coarse concentrates and tailings; Class B makes coarse concentrates, hutches and tail-
(u) Every two hours when the bottom beds become 4 inches thick they are skimmed to 2 inches. (w) No. 1
Each sieve has about 33 pounds of lead shot, 7.1 mm. in diameter and 100 pounds of the hutch of No. 2 jig. 3.6
watered first spigot of No. 1 hydraulic classifier. (a') To smelter as first class concentrates. (b') To smelter

Digitized by Google

TABLE 283.—PURPOSE AND ADJUSTMENTS OF JIGS.—*Continued.*

jig taken in order from the head to the tail.

Br.=Bryan; br'k'r=breakers; c.=concentrates; C. c.=Coarse concentrates; Cl.=Cleaning; cl.=classifier; ington mill; Hunt.=Huntington; hy.=hydraulic; hy. cl.=hydraulic classifier; inf.=infinity; j.=jig; K.= pr. or preced'g=preceding; p. t.=picking table; r.=rolls; s.=sieve; sc.=screen; sm.=smelter; sp.=spigot; unw.=unwaterer or unwatered; Unw. b.=Unwatering box; Z.=Zinc.

Mill Number.	Jig Number.	Coarse Concentrates. How Removed.	Destination of Products. Coarse Concentrates to	Hutch Products to	Tailings to	Amount of Plunger Throw.	No. of Throws per Minute.	Automatic Discharge. Height of Gate.	Height of Dam.	Ratio of Height of Gate to Max. Grain of Feed.	Ratio of Height of Dam to Height of Tail.
						Inches.		In.	In.		
25	1	(*w*)	Rolls	(*v*)	Waste	2	145	.....	.....	.....	.....
	2	None	None	Smelter	"	5/16	205	.....	.....	.....	.....
	3	"	"	"	"	7/16	261	.....	.....	.....	.....
26	1	"	"	(1) (2) Sm (3) Br. mill	"	11/16, 5/8, 7/8	220	.....	.....	.....	.....
	2	"	"	Same as pr.	"	7/16	260	.....	.....	.....	.....
	3	"	"	"	"	1/8, 7/16, 3/8	300	.....	.....	.....	.....
	4	"	"	"	"	3/16, 7/16, 7/16	340	.....	.....	.....	.....
	5	"	"	"	"	1/4, 11/16, 7/16	384	.....	.....	.....	.....
	6	"	"	(1) Sm. (2) Br. mill	"	1/8	400	.....	.....	.....	.....
27	1	Aut. discharges	Smelter	Smelter	Rolls	1/16	95	1 3/4	1	1.17	0.17
	2	"	"	"	"	2	112	1 1/2	1	1.25	0.20
	3	"	"	"	"	7/8	105	3/4	1 1/8	1.20	0.33
	4	"	"	"	"	5/8	120	3/4	1 1/2	1.50	0.33
	5	"	"	"	"	3/4	132	.....	.....	.....	.....
						(*y*) 1	150	.....	.....	.....	.....
						(*y*) 1 3/4	150	.....	.....	.....	.....
	6	"	"	"	St. or H. m.	Gr. 1 5/8 - 1 or 1 3/4 - 1 1/2	152 148	.....	.....	.....	.....
	7	"	"	"	Stamps	5/8	150	.....	.....	.....	.....
	8	"	"	"	H. m.	Gr. 1/16 to 1/8	196	.....	.....	.....	.....
	9	By skimming	"	"	"	3/16	200	.....	.....	.....	.....
	10	None	None	"	"	Gr. 3/8 to 1/4	212	.....	.....	.....	.....
	11	"	"	"	Vanners	1/4	212	.....	.....	.....	.....
28	1	Aut. discharges	Smelter	"	Rolls	2 3/16	96	1 3/4	4 1/2	1.11	0.78
	2	"	"	"	"	2 1/2	105	1 1/4	2	1.27	0.44
	3	"	(1) (2) Smelter (3) (4) Rolls	(1) (2) Sm (3) (4) Rolls	Waste	1 7/16	121	.....	.....	.....	.....
	4	"	Same as preced'g	Same as pr.	"	1 1/16	123	.....	.....	.....	.....
	5	"	(1) (2) Smelter (3) (4) Rolls	(1) (2) Sm (3) (4) Rolls	"	1 3/16	132	.....	.....	.....	.....
	6	"	(1) (2) Smelter (3) (4) Hunt. mill	(1) (2) Sm (3) (4) H. m.	"	1 1/16	138	.....	.....	.....	.....
	7	"	Same as preced'g	Same as pr.	"	13/16	133 1/2	.....	.....	.....	.....
	8	"	"	"	"	11/16	133	.....	.....	.....	.....
	9	None	None	Smelter	"	1/8	135	.....	.....	.....	.....
	10	"	"	"	"	5/16	141 1/2	.....	.....	.....	.....
	11	"	"	"	"	3/8	163	.....	.....	.....	.....
	12	"	"	"	"	7/16	180 1/2	.....	.....	.....	.....
29	1	Aut. discharges	Smelter	"	"	1/4, 1/8, 3/8, 3/8	250	.....	.....	.....	.....
	2	"	"	"	"	1/4, 1/4, 7/16, 7/16	300	.....	.....	.....	.....
	3	"	"	"	"	1/2, 1/2, 7/16, 7/16	350	.....	.....	.....	.....
	4	"	"	"	"	7/16, 7/16, 11/16, 11/16	350	.....	.....	.....	.....
	5	None	None	"	"	11/16, 11/16, 11/16, 11/16	400	.....	.....	.....	.....
30	1	Aut. discharge	(1) (*a'*) (2) (3) No. 3 rolls	(1) (*a'*) (2) (3) No. 3 r.	Stored	2	110	1	4	1.02	0.66
								1 1/4	3 1/4	1.52	0.58
								1 1/2	3 1/2	1.52	0.54
								3/4	4 1/2	1.27	0.75
	2	"	Same as preced'g	Same as pr.	"	2	115	1	3 1/2	1.69	0.58
						1 3/4		1	3	1.69	0.46
						1 3/4		1/2	5	1.27	1.00
	3	"	"	"	"	1 1/2	130	1	4 1/2	2.54	0.90
						1 1/2		1	4 1/2	2.54	0.88
	4	"	(1) (*a'*) (2) (*b'*) (3) No. 4 rolls	(1) (*a'*) (2) (*b'*) (3) No. 4 r.	"	1 1/4	150	1/2	4	1.81	0.89
						1		1	4 1/2	3.63	1.00
						1		1	3 1/2	3.63	0.70
						7/8		1/2	3 5/8	2.54	0.81
	5	"	Same as preced'g	Same as pr.	"	5/8	190	1/2	3 1/2	2.54	0.78
						5/8		5/8	3	3.81	0.60

ings; Class C makes hutches and tailings. (*b*) These are the ratios of the maximum grains of each material. or No. 2 surface current box classifier. (*w*) Spigots of box classifier and tailings of trunking machine. (*x*) to 2.1 mm. diameter. (*y*) These two figures are for the crank arm jigs and the Harz jigs respectively. (*z*) Un- as second class concentrates.

TABLE 283.—PURPOSE AND ADJUSTMENTS OF JIGS.—*Continued.*

NOTE.—In some cases several values will be found for one jig. These are for the different sieves of the

Abbreviations.—Aut.=Automatic; Aut. dis.=Automatic discharge; b. cl.=box classifier; B'low=Below; dis.=discharge; dist.=distributor; Gr.=Graded from; H.=Hutches of; h.=hutch; H. m. or Hunt. m.=Hunt-Kieve; L.=Lead; lbs.=pounds; m.=mill; ma.=machine; Max.=Maximum; No.=Number; Ov.=Oversize of; st.=stamp; st. st.=steam stamp; T.=Tailings of; tr.=trommel; Tr. ma.=Trunking machine; Un.=Undersize;

Mill Number.	Jig Number.	Class of Jig. (a)	Material of Feed.	Size of Feed.	Net Diameter of Screen Hole.	Ratio of Diameter of Screen Hole to Diameter of Feed.	Material of Bottom Bed.	Thickness of Bed.	Ratio of Diameter of Bed Material to Diameter of Feed. (b)
				Mm.	Mm.			Inches.	
30	6	B	1st sp. No. 1 hy. cl.	3 to 0	1.07 0.89 0.89	0.36 to inf. 0.30 to " 0.30 to "	Makes own bed.....	.....	.....
	7	B	2d spigot of same..	3 to 0	0.89	.....	"	.....	.....
	8	C	3d sp. of same.....	3 to 0	0.89	.....	Sometimes need coarse concentrates of No. 6 jig, 3 to 1.07 mm.....	.....	.....
31	1	A	From No. 1 tr.....	Over 18	3.58	— to 0.20	Makes own bed.....	.....	.....
	2	A	"	18 to 15	2.59	0.14 to 0.17	"	.....	.....
	3	A	"	15 to 9	2.59	0.17 to 0.29	"	.....	.....
	4	A	From No. 2 tr.....	9 to 6	2.59	0.29 to 0.43	Makes own bed.....	.....	.....
	5	A	"	6 to 4	2.59	0.43 to 0.65	"	.....	.....
	6	B	1st sp. No. 1 b. cl..	4 to 0	3.00	0.75 to inf.	"	.....	.....
	7	B	2d spigot of same..	4 to 0	1.22	.....	"	.....	.....
	8	C	3d spigot of same..	4 to 0	1.22	.....	.....	.....	.....
	9	B	1st sp. No. 4 b. cl..	2.5 to 0	1.22	0.49 to inf.	Makes own bed.....	.....	.....
	10	C	2d spigot of same..	2.5 to 0	1.22	.....	.....	.....	.....
	11	C	3d spigot of same..	2.5 to 0	1.22	.....	.....	.....	.....
32	1	A	From No. 1 tr.....	Over 12	1.98	— to 0.16	Makes own bed.....	.....	.....
	2	A	"	12 to 8	1.98	0.16 to 0.24	"	.....	.....
	3	A	From No. 2 tr.....	8 to 6	1.98	0.24 to 0.32	"	.....	.....
	4	A	"	6 to 3	1.98	0.32 to 0.64	"	.....	.....
	5	B	1st sp. No. 1 hy. cl.	3 to 0	1.98	0.64 to inf.	"	.....	.....
	6	B	2d spigot of same..	3 to 0	1.98	.....	"	.....	.....
	7	C	3d spigot of same..	3 to 0	1.65	.....	.....	.....	.....
	8	B	1st sp. No. 2 hy. cl.	2 to 0	1.98	0.96 to inf.	Makes own bed.....	.....	.....
	9	B	2d spigot of same..	2 to 0	1.40	.....	"	.....	.....
	10	C	3d spigot of same..	2 to 0	1.40	.....	.....	.....	.....
33	1	A	From No. 1 tr.....	12.7 to 7.9	8 mesh.	.....	Makes own bed.....	.....	.....
	2	A	From No. 2 tr.....	7.9 to 5.1	8 mesh.	.....	"	.....	.....
	3	A	"	5.1 to 3.3	8 mesh.	.....	"	.....	.....
	4	B	1st sp. No. 1 hy. cl.	3.3 to 0	12 mesh.	.....	"	.....	.....
	5	C	2d spigot of same..	3.3 to 0	14 mesh.	.....	.....	.....	.....
34	1	A	From No. 2 tr.....	15 to 13	6.81	0.45 to 0.52	Makes own bed.....	.....	.....

(a) Class A makes coarse concentrates and tailings; Class B makes coarse concentrates, hutches and tail-melter as first class concentrates. (b') To smelter as second class concentrates. (c') This jig makes no discharges like No. 6 jig. (f') Automatic discharge run intermittently when bottom bed gets

TABLE 283.—PURPOSE AND ADJUSTMENTS OF JIGS.—*Continued.*

jig taken in order from the head to the tail.

Br.=Bryan; br'k'r=breakers; c.=concentrates; C. c.=Coarse concentrates; Cl.=Cleaning; cl.=classifier; ington mill; Hunt.=Huntington; hy=hydraulic; hy. cl.=hydraulic classifier; inf.=infinity; j.=jig; K.= pr. or preced'g=preceding; p. t.=picking table; r.=rolls; s.=sieve; sc.=screen; sm.=smelter; sp.=spigot; unw.=unwaterer or unwatered; Unw. b.=Unwatering box; Z.=Zinc.

Mill Number.	Jig Number.	Coarse Concentrates. How Removed.	Destination of Products. Coarse Concentrates to	Hutch Products to	Tailings to	Amount of Plunger Throw.	No. of Throws per Minute.	Automatic Discharge. Height of Gate.	Height of Dam.	Ratio of Height of Gate to Max. Grain of Feed.	Ratio of Height of Dam of Height of Tail.
						Inches.		In.	In.		
30	6	(1) Aut. dis..... (2) None..... (3) Aut. dis.....	(1) (a') .... (2) None..... (3) No. 4 rolls....	(1) (a')..... (2) (b') ..... (3) No. 4 r..	Waste....	5/8 1/2 7/8 1/2 7/8 1/2 7/8 1/2 7/8 1/2 7/8 1/2 7/8 1/2 7/8 1/2	225	1/4 ..... 1/16	2 1/2 4	2.12 ..... 0.79	0.63 ..... 0.89
	7	(c')	(c')	(1) (a') (2) (b') (3) (4) No. 4 r..	"		280	.....	.....	.....	.....
	8	None.....	None.....	(1) (a') (2) (3) (b') (4) No. 4 r...	"		320	.....	.....	.....	.....
31	1	Automatic tail discharge.	(1) Smelter..... (2) No. 2 rolls	(1) Smelter. (2) No. 2 r..	"	1 1/2	130	1 1/2 2 1/2	3 1/4 3	(d') 3.53	0.65 0.60
	2	"	Same as preced'g	Same as pr.	"	1	130	.....	.....	.....	.....
	3	"	"	"	"	3/4	134	.....	.....	.....	.....
	4	Automatic tail discharges.	(1) (2) Smelter. .... (3) (4) No. 2 rolls...	(1) (2) Sm .... (3) (4) No. 2 r.	Waste....	1/2	250	1 1/2 2 1/4	2 3/4 2 1/4	4.23 3.53	0.69 0.56
	5	"	Same as preced'g	Same as pr.	" ...	1/2	195	.....	.....	.....	.....
	6	"	(1) (2) Smelter..... (3) (4) No 3 rolls...	(1) (2) Sm .... (3) (4) No. 3 r.	" ...	5/8	280	7/8	2 3/4	5.56	0.92
	7	(1) Aut. tail dis (2) (3) None..... (4)	(1) Smelter ..... (2) (3) None..... (4)	Same as pr.	" ...	1/2	280	.....	.....	.....	.....
	8	None.....	None.....	"	" ...	1/8	320	.....	.....	.....	.....
	9	(e')	(e')	"	" ...	1/8	320	.....	.....	.....	.....
	10	None.....	None.....	"	" ...	1/8	320	.....	.....	.....	.....
	11	"	"	"	" ...	1/8	320	.....	.....	.....	.....
32	1	Aut. discharges	(1) Smelter..... (2) No. 2 rolls....	No. 2 rolls	" ...	2 1 3/4	150	.....	.....	.....	.....
	2	"	(1) (2) Smelter ..... (3) (4) No. 2 rolls...	Smelter..	No. 2 rolls..	1 1/4	175	.....	.....	.....	.....
	3	"	(1) (2) Smelter..... (3) (4) Rolls	(1) (2) Sm .... (3) (4) Rolls...	Waste ...	1	185	.....	.....	.....	.....
	4	"	Same as preced'g	Same as pr.	" ...	3/4	200	.....	.....	.....	.....
	5	(1) (2) None..... (3) (4) Aut. dis....	(1) (2) None ..... (3) (4) Rolls.....	"	" ...	1/2	260	.....	.....	.....	.....
	6	Same as preced'g	Same as preced'g	"	" ...	3/8	280	.....	.....	.....	.....
	7	None.....	None.....	"	" ...	1/8	300	.....	.....	.....	.....
	8	(1) (2) None..... (3) (4) Aut. dis.....	(1) (2) None..... (3) (4) Rolls.....	"	" ...	1/2	290	.....	.....	.....	.....
	9	Same as preced'g	Same as preced'g	"	" ...	3/8	305	.....	.....	.....	.....
	10	None.....	None.....	"	" ...	1/8	315	.....	.....	.....	.....
33	1	Aut. discharges	(1) (2) Smelter..... (3) No. 2 rolls	(1) (2) Sm .... (3) No. 2 r..	" ...	1 1/4	120	.....	.....	.....	.....
	2	"	Same as preced'g	Same as pr.	" ...	.....	.....	.....	.....	.....	.....
	3	"	"	"	" ...	.....	.....	.....	.....	.....	.....
	4	(1) (f') ..... (2) (f') ..... (3) None. ..... (4) (f')	(1) (2) Smelter..... (3) None..... (4) No. 2 rolls.....	(1) (2) Sm ... (3) (4) No. 2 r.	" ...	.....	.....	.....	.....	.....	.....
	5	None	None.....	Same as pr.	" ...	1/4	182	.....	.....	.....	.....
34	1	Aut. discharges	(1) (2) Smelter..... (3) No. 2 rolls ...	No. 2 r...	" ...	.....	150	.....	.....	.....	.....

ings; Class C makes hutches and tailings. (*b*) These are the ratios of the maximum grains of each material. practically no coarse concentrates; it is probably skimmed occasionally. (*d'*) Below 2.12. (*e'*) Probably has too thick.

TABLE 283.—PURPOSE AND ADJUSTMENTS OF JIGS.—*Continued.*

NOTE.—In some cases several values will be found for one jig. These are for the different sieves of the

Abbreviations.—Aut.=Automatic; Aut. dis.=Automatic discharge; b. cl.=box classifier; B'low=Below; dis.=discharge; dist.=distributor; Gr.=Graded from; H.=Hutches of; h.=hutch; H. m. or Hunt. m.=Hunt-Kieve; L.=Lead; lbs.=pounds; m.=mill; ma.=machine; Max.=Maximum; No.=Number; Ov.=Oversize of; st.=stamp; st. st.=steam stamp; T.=Tailings of; tr.=trommel; Tr. ma.=Trunking machine; Un.=Undersize;

Mill Number.	Jig Number.	Class of Jig. (a)	Material of Feed.	Size of Feed.	Net Diameter of Screen Hole.	Ratio of Diameter of Screen Hole to Diameter of Feed.	Material of Bottom Bed.	Thickness of Bed.	Ratio of Diameter of Bed Material to Diameter of Feed. (b)
				Mm.	Mm.			Inches.	
34	2	A	From No. 2 tr.....	13 to 11	6.81	0.52 to 0.62	Makes own bed.....	.....	.....
	3	A	From No. 3 tr.....	11 to 9	4.88	0.44 to 0.54	"	.....	.....
	4	A	"	9 to 7	3.61	0.40 to 0.52	"	.....	.....
	5	A	From No. 4 tr,.....	7 to 5	3.00	0.43 to 0.60	"	.....	.....
	6	A	"	5 to 3	3.00	0.60 to 1.0	"	.....	.....
	7	B	1st sp. No. 1 hy. cl.	3 to 0	1.98 1.98 1.65 1.65	0.64 to inf. 0.64 to " 0.55 to " 0.55 to "	"	.....	.....
	8	C	2d & 3d sp. of same.	3 to 0	1.40	.....	From next coarser sc.	.....	.....
	9	C	4th & 5th sp. same.	3 to 0	1.04	.....	"	.....	.....
35	1	A	Oversize No. 1 tr...	Over 16	4	— to 0.25	Makes own bed.....	.....	.....
	2	A	Oversize No. 2 tr...	16 to 9	3	0.19 to 0.33	"	.....	.....
	3	A	Oversize No. 3 tr...	9 to 5	2.13	0.24 to 0.43	"	.....	.....
	4	A	Oversize No. 4 tr...	5 to 3	1.52	0.30 to 0.51	"	.....	.....
	5	B	1st sp. No. 1 hy. cl.	3 to 0	2.13	0.71 to inf.	"	.....	.....
	6	B	2d spigot of same..	3 to 0	1.52	.....	"	.....	.....
	7	C	3d spigot of same..	3 to 0	1.52	.....	.....	.....	.....
	8	C	4th spigot of same.	3 to 0	1.52	.....	.....	.....	.....
	9	B	1st sp. No. 2 hy. cl.	2.5 to 0	1.52	0.61 to inf.	9 to 5 mm. stuff.	.....	3.6
	10	B	2d sp. of same.....	2.5 to 0	1.30	.....	"	.....	.....
	11	B	3d spigot of same..	2.5 to 0	1.30	.....	"	.....	.....
36	1	A	Oversize No. 2 tr...	12.7 to 7.9	8 mesh.	.....	Makes own bed.....	.....	.....
	2	A	Oversize No. 3 tr...	7.9 to 5.1	12 mesh.	.....	"	.....	.....
	3	A	Oversize No. 4 tr...	5.1 to 3.3	12 mesh.	.....	"	.....	.....
	4	B	1st sp. No. 1 hy. cl.	3.3 to 0	12 mesh.	.....	"	.....	.....
	5	C	2d spigot of same..	3.3 to 0	16 mesh.	.....	.....	.....	.....
38	1	A	Oversize No. 2 tr...	38.1 to 22.2	7.94	0.21 to 0.36	Makes own bed.....	2	.....
	2	B	Ov. No. 3 tr. and hutch No. 1 jig.	22.2 to 9.5 and 7.94 to 0	7.94	0.36 to 0.84 & 1.0 to inf.	"	2	.....
	3	A	Oversize No. 4 tr...	9.5 to 5	4.24	0.45 to 0.85	"	1 1½	.....
	4	B	Oversize No. 5 tr...	5 to 2.5	2.59	0.51 to 1.04	"	1 1½	.....
	5	B	1st sp. No. 1 hy. cl.	2.5 to 0	2.59 1.93	1.0 to inf. 0.77 to "	"	1	.....
	6	B	2d spigot of same..	2.5 to 0	1.93	.....	Coarse c. No. 4 jig, 5 to 2.59 mm.	1	.....
	7	B	3d spigot of same..	2.5 to 0	1.47 1.22	.....	"	1¼	.....
	8	B	4th spigot of same.	2.5 to 0	1.47 0.91	.....	"	1½	.....

(a) Class A makes coarse concentrates and tailings; Class B makes coarse concentrates, hutches and tai-
(g') Probably none. (h') To suit the bottom bed.

TABLE 283.—PURPOSE AND ADJUSTMENTS OF JIGS.—*Continued.*

jig taken in order from the head to the tail.

Br.=Bryan; br'k'r=breakers c.=concentrates; C. c.=Coarse concentrates; Cl.=Cleaning; cl.=classifier; ington mill; Hunt.=Huntington; hy.=hydraulic; hy. cl.=hydraulic classifier; inf.=infinity; j.=jig; K.= pr. or preced'g=preceding; p. t.=picking table; r.=rolls; s.=sieve; sc.=screen; sm.=smelter; sp.=spigot; unw.=unwaterer or unwatered; Unw. b.=Unwatering box; Z.=Zinc.

Mill Number.	Jig Number.	Coarse Concentrates. How Removed.	Destination of Products. Coarse Concentrates to	Hutch Products to	Tailings to	Amount of Plunger Throw.	No. of Throws per minute.	Automatic Discharge. Height of Gate.	Automatic Discharge. Height of Dam.	Ratio of Height of Gate to Max. Grain of Feed.	Ratio of Height of Dam to Height of Tail.
						Inches.		In.	In.		
34	2	Aut. discharge..	Same as preced'g	No. 2 r.....	Waste.....	.....	150	.....	.....	.....	.....
	3	"	(1) (2) (3) Smelter..... Rolls.....	Rolls.....	" ...	.....	170	.....	.....	.....	.....
	4	"	Same as preced'g	"	" ...	.....	170	.....	.....	.....	.....
	5	"	(1) (2) (3) Smelter..... (4) Rolls.....	"	" ...	.....	180	.....	.....	.....	.....
	6	"	Same as pr.....	(1) (2) (3) Sm.... (4) Rolls....	" ...	.....	200	.....	.....	.....	.....
	7	"	"	Same as pr.	" ...	.....	225	.....	.....	.....	.....
	8	(g)	(g)	"	" ...	.....	250	.....	.....	.....	.....
	9	(g)	(g)	"	" ...	.....	300	.....	.....	.....	.....
35	1	Aut. discharge.	(1) (2) (3) Smelter..... No. 2 rolls....	(1) Smelter. (2) (3) No. 2 r.	" ...	2¼	160	1½	3½	Below 2.38	0.70
	2	"	Same as preced'g	Same as pr.	" ...	1¾	160	1½	3½	2.38	0.70
	3	"	"	"	" ...	1⅞	170	¾	3	2.12	0.67
	4	"	"	(1) (2) (3) Sm.... No. 2 r...	" ...	1¼	170	½	2½	2.54	0.83
	5	"	(1) Smelter..... (2) No. 2 rolls....	(1) Smelter. (2) No. 2 r..	" ...	½	145	.....	.....	.....	.....
	6	"	Same as preced'g	Same as pr.	" ...	½	145	.....	.....	.....	.....
	7	None.....	None	"	" ...	½	145	.....	.....	.....	.....
	8	"	"	"	" ...	½	145	.....	.....	.....	.....
	9	(1) (2) None..... (3) Aut. dis....	(1) (2) None ..... (3) No. 2 rolls....	(1) (2) Sm.... (3) No. 2 r..	" ...	⅝	200	.....	.....	.....	.....
	10	Same as preced'g	Same as preced'g	Same as pr.	" ...	½	250	.....	.....	.....	.....
	11	"	"	"	" ...	3/32	275	.....	.....	.....	.....
36	1	Aut. discharges	(1) Smelter ..... (2) No. 2 rolls....	(1) Smelter. (2) No. 2 r..	" ...	.....	.....	.....	.....	.....	.....
	2	"	(1) (2) Smelter..... (3) (4) No. 3 rolls...	(1) (2) Sm .... (3) (4) No. 3 r.	" ...	.....	.....	.....	.....	.....	.....
	3	"	(1) (2) Smelter.... (3) (4) No. 3 rolls.	Same as pr.	" ...	.....	.....	.....	.....	.....	.....
	4	(1) (2) Aut. dis.. (3) None..... (4) Aut. dis.....	(1) (2) Smelter..... (3) None..... (4) No. 3 rolls....	"	" ...	.....	.....	.....	.....	.....	.....
	5	None.....	None.....	"	" ...	.....	.....	.....	.....	.....	.....
38	1	Aut. discharges..	Smelter.....	No. 2 jig...	No. 1 rolls..	1½	175	3	1¾	2.00	0.27
	2	" ...	"	No. 3 jig or sm..	No. 2 rolls	1½	175	2 / 2½	1 / 1	2.29 / 2.86	0.22 / 0.22
	3	" ...	"	Smelter....	Unw. to No. 3 r..	1¼ / 1	180	1¾ / 2	¾ / ¾	4.67 / 5.33	0.21 / 0.21
	4	" ...	"	"	"	1	180	2 / 2½	½ / ⅛	10.16 / 12.70	0.14 / 0.14
	5	(1) None..... (2) Aut. dis.....	(1) None..... (2) Hunt. mill..	"	Waste....	⅜ / ⅛ / ⅛	200	..... / 2	..... / (h')	..... / 20.32	..... / .....
	6	Same as preced'g	Same as preced'g	"	" ...	⅛ / ⅛ / ⅜	200	..... / 2¼	..... / (h')	..... /	..... / .....
	7	"	"	"	"	⅜	200	..... / 2¼	..... / (h')	..... /	..... / .....
	8	"	"	(1) Smelter. (2) Box cl..	" ...	⅜ / ⅛ / ¼	200	..... / 2	..... / (h')	..... /	..... / .....

ings; Class C makes hutches and tailings. (*h*) These are the ratios of the maximum grains of each material

TABLE 283.—PURPOSE AND ADJUSTMENTS OF JIGS.—*Continued.*

NOTE.—In some cases several values will be found for one jig. These are for the different sieves of the

Abbreviations.—Aut.=Automatic; Aut. dis.=Automatic discharge; b. cl.=box classifier; B'low=Below; dis.=discharge; dist.=distributor; Gr.=Graded from; H.=Hutches of; h.=hutch; H. m. or Hunt. m.=Hunt-Kieve; L.=Lead; lbs.=pounds; m.=mill; ma.=machine; Max.=Maximum; No.=Number; Ov.=Oversize of; st.=stamp; st. st.=steam stamp; T.=Tailings of; tr.=trommel; Tr. ma.=Trunking machine; Un.=Undersize;

Mill Number.	Jig Number.	Class of Jig. (a)	Material of Feed.	Size of Feed.	Net Diameter of Screen Hole.	Ratio of Diameter of Screen Hole to Diameter of Feed.	Material of Bottom Bed.	Thickness of Bed.	Ratio of Diameter of Bed Material to Diameter of Feed. (b)
				Mm.	Mm.			Inches.	
38	9 to 12	(d)	(d)	(d)	(d)	(d)	(d)	(d)	(d)
	13	B	1st sp. No. 3 hy. cl.	1.5 to 0	1.93	1.3 to inf.	(1) C. c. of No. 3 jig, 9.5 to 5 mm.... (2) C. c. No. 4 j., 5 to 2.6 mm. (3)	1½ 1½ 2	6.3 6.3 3.3
	14	B	2d spigot of same..	1.5 to 0	1.93	.....	Same as preceding...	1½ 1½ 2	.....
	15	A	From No. 7 tr.....	22.2 to 9.5	5.69	0.26 to 0.60	Makes own bed.....	.....	.....
	16	B	Ov. No. 8 tr. and hutches No. 15 jig	9.5 to 5 and 5.69 to 0	2.59	0.27 to 0.53 & 0.46 to inf.	"	.....	.....
	17	B	1st sp. No. 4 hy. cl.	5 to 0	.....	.....	"	.....	.....
	18	B	2d spigot of same..	5 to 0	.....	.....	"	.....	.....
39	1	A	From No. 1 tr.....	54.0 to 38.1	9.53	0.18 to 0.25	"	.....	.....
	2	A	From No. 2 tr.....	38.1 to 15	8	0.21 to 0.53	"	.....	.....
	3	A	Oversize No. 3 tr...	15 to 8.5	3.58	0.24 to 0.42	"	.....	.....
	4	A	Oversize No. 4 tr...	8.5 to 4.5	2.67 2.13 1.52	0.31 to 0.59 0.25 to 0.47 0.18 to 0.34	"	.....	.....
	5	B	1st sp. No. 1 hy. cl.	4.5 to 0	2.67 2.13 1.52	0.59 to inf. 0.47 to " 0.34 to "	"	2½-3	.....
	6	B	2d spigot of same..	4.5 to 0	2.13 1.52 1.52	.....	"	2½-3	.....
	7	C	1st sp. No. 2 hy. cl.	4.5 to 0	1.52 1.30 1.30 1.04	.....	Coarse c. No. 5 jig, 4.5 to 2.59 mm.	2½-3	.....
	8	C	2d sp. No. 2 hy. cl..	4.5 to 0	1.04 1.04 0.91 0.91	.....	"	2½-3	.....
	9	B	Spigots No. 3 hy. cl.	2.5 to 0	2.13 1.52 1.52 1.52	0.85 to inf. 0.61 to " 0.61 to " 0.61 to "	"	2½-3	1.8
	10	B	Spigots No. 4 hy. cl.	2.5 to 0	1.52 1.52 1.30 1.30	.....	"	2½-3	.....
40	1	A	Oversize No. 2 tr...	90 to 7	4 mesh.	.....	Makes own bed.....	.....	.....
	2	B	Oversize No. 3 tr...	7 to 4.5	5.69	0.81 to 1.3	"	.....	.....
	3	B	Oversize No. 4 tr...	4.5 to 3	3.58 3.58 2.97	0.80 to 1.2 0.80 to 1.2 0.66 to 0.99	"	.....	.....
	4	B	1st, 2d, 3d and 4th sp. No. 1 hy. cl.	3 to 0	1.30	0.43 to inf.	"	.....	.....
	5	B	1st sp. No. 2 hy. cl.	3 to 0	1.30	0.43 to "	"	.....	.....
	6	B	2d spigot of same..	3 to 0	1.30	.....	"	.....	.....
41	1	A	Oversize No. 2 tr...	15.9 to 9.5	4.70	0.30 to 0.50	"	.....	.....
	2	A	Oversize No. 3 tr...	9.5 to 6.4	6.35 6.35 3.43	0.67 to 1.0 0.67 to 1.0 0.36 to 0.54	"	.....	.....
	3	B	Oversize No. 4 tr...	6.4 to 3.2	3.43	0.54 to 1.1	"	.....	.....
	4	B	1st sp. No. 1 hy. cl.	3.2 to 0	3.43	1.1 to inf.	"	.....	.....

(a) Class A makes coarse concentrates and tailings; Class B makes coarse concentrates, hutches and tail-

(d) Jigs 9, 10, 11 and 12 are just like Nos. 5, 6, 7 and 8 respectively, except they are fed from No. 2 hydraulic

TABLE 283.—PURPOSE AND ADJUSTMENTS OF JIGS.—*Continued.*

jig taken in order from the head to the tail.

Br.=Bryan; br'k'r=breakers; c.=concentrates; C. c.=Coarse concentrates; Cl.=Cleaning; cl.=classifier; ington mill; Hunt.=Huntington; hy.=hydraulic; hy. cl.=hydraulic classifier; inf.=infinity; j.=jig; K.= pr. or preced'g=preceding; p. t.=picking table; r.=rolls; s.=sieve; sc.=screen; sm.=smelter; sp.=spigot; unw.=unwaterer or unwatered; Unw. b.=Unwatering box; Z.=Zinc.

Mill Number.	Jig Number.	Coarse Concentrates. How Removed.	Destination of Products. Coarse Concentrates to	Destination of Products. Hutch Products to	Destination of Products. Tailings to	Amount of Plunger Throw.	No. of Throws per Minute.	Automatic Discharge. Height of Gate.	Automatic Discharge. Height of Dam.	Ratio of Height of Gate to Max. Grain of Feed.	Ratio of Height of Dam of Height of Tail.
						Inches.		In.	In.		
38	9 to 12	(*d*)	(*d*)	(*d*)	(*d*)	(*d*)	(*d*)	(*d*)	(*d*)	(*d*)	(*d*)
	13	(1) None (2) (3) Aut. dis.	(1) None (2) (3) Smelter	(1) Sm. (2) (3) Hunt. m.	Waste	¾ ⅝ ⅞ ⅞	200	 2	.... 2½	....	.... 0.71
	14	Same as preced'g	Same as preced'g	Same as pr.	"	¾ ⅝ ⅞ ¼	200	 2	.... 2½	....	.... 0.71
	15	Aut. discharges	Smelter	No. 16 jigs	Steam st.	....	....	....	....	....	....
	16	"	"	Smelter	Hunt. m	....	....	....	....	....	....
	17	"	" (1) (2) (3)	Sm Hunt. m.	Waste	....	200	....	....	....	....
	18	"	"	Same as pr.	"	....	200	....	....	....	....
39	1	Aut. tail dis.	"	No. 2 tr.	No. 2 br'k'r	4 to 3½	140	2½	2½	1.18	0.63
	2	"	"	"	No. 1 rolls	3½ to 3	140	2½	2½	1.67	0.63
	3	Aut. side dis.	"	"	No. 2 rolls	1⅛ 1⅜	140	1	2½	1.69	0.63
	4	"	"	Smelter	Hunt. m.	1⅜ 1⅛ 1¼ 1	160	¾	2½	2.24	0.63
	5	"	"	"	"	⅞ ⅞ ¾	180	⅝ ⅞ ⅞	2½ 2½ 2½	3.53 2.82 2.82	0.63 0.63 0.63
	6	"	"	"	"	1 ⅞ ⅝ ⅞	180	½	2½	....	0.63
	7	(*f'*)	None	"	"	¾ ¾ ⅞ ⅞ ⅞	200	....	....	....	....
	8	(*f'*)	None	"	"	⅝, ⅝, ⅞, ⅞	210	....	....	....	....
	9	(1) (2) (3) None (4) Aut. dis.	(1) (2) (3) None (4) Hunt. mill	(1) (2) (3) Sm. (4) Hunt. m.	Waste	⅝ ⅝ ⅞ ⅞ ⅞	210	 1	.... 2½	.... 10.16	.... 0.63
	10	Same as preced'g	Same as preced'g	Same as pr.	"	⅝ ⅞ ⅞ ⅞ ⅞	210	 1	.... 2½	....	.... 0.63
40	1	Aut. discharge	No. 6 rolls	No. 4 rolls	No. 2 rolls	2	140	....	....	....	....
	2	"	Smelter	Smelter	No. 3 rolls	1 ⅞ ¾	160	3 3 4	4 4 5	10.89 10.89 14.51	1.00 1.00 1.25
	3	"	"	"	No. 4 rolls	⅞	190	3 3 4	4 4 5	16.93 16.93 22.58	1.00 1.00 1.25
	4	"	(1) (2) Smelter (3) No. 4 rolls	"	Waste	⅝ ⅞ ⅞ ⅞ ⅞	210	3 3 4	4 4 5	25.40 25.40 33.87	1.00 1.00 1.25
	5	"	Same as pr.	(1) (2) Sm (3) No. 4 r.	"	⅝ ⅞ ⅞ ⅞ ⅞	210	3 3 4	4 4 5	....	1.00 1.00 1.25
	6	"	"	Same as pr.	"	⅝ ⅞ ⅞ ⅞	210	3 3 4	4 4 5	....	1.00 1.00 1.25
41	1	"	Smelter	No. 3 rolls	No. 3 rolls	2¾	80	....	....	....	....
	2	"	"	(1) (2) (3) Sm No. 4 r.	No. 4 rolls	2	100	....	....	....	....
	3	"	"	Same as pr.	"	1¾	115	....	....	....	....
	4	"	(1) (2) (3) Smelter	(1) (2) (3) Sm No. 2 r.	Waste	1⅝	180	....	....	....	....

ings; Class C makes hutches and tailings. (*b*) These are the ratios of the maximum grains of each material classifier. (*f'*) Skimmed occasionally to clean the sieve.

TABLE 283.—PURPOSE AND ADJUSTMENTS OF JIGS.—*Continued.*

NOTE.—In some cases several values will be found for one jig. These are for the different sieves of the

Abbreviations.—Aut.=Automatic; Aut. dis.=Automatic discharge; b. cl.=box classifier; B'low=Below; dis.=discharge; dist.=distributor; Gr.=Graded from; H.=Hutches of; h.=hutch; H. m. or Hunt. m.=Hunt-Kieve; L.=Lead; lbs.=pounds; m.=mill; ma.=machine; Max.=Maximum; No.=Number; Ov.=Oversize of; st.=stamp; st. st.=steam stamp; T.=Tailings of; tr.=trommel; Tr. ma.=Trunking machine; Un.=Undersize;

Mill Number.	Jig Number.	Class of Jig. (a)	Material of Feed.	Size of Feed.	Net Diameter of Screen Hole.	Ratio of Diameter of Screen Hole to Diameter of Feed.	Material of Bottom Bed.	Thickness of Bed.	Ratio of Diameter of Bed Material to Diameter of Feed. (b)
				Mm.	Mm.			Inches.	
41	5	B	2d spigot of same..	3.2 to 0	2.77	.....	Make own bed.....	.....	.....
	6	C	3d spigot of same..	3.2 to 0	1.93	.....	H.No.4 j. 3.43 mm.to 0	.....	.....
	7	C	4th spigot of same.	3.2 to 0	1.30	.....	"	.....	.....
	8	C	5th spigot of same.	3.2 to 0	1.22	.....	"	.....	.....
	9	B	1st and 2d spigots of No. 3 hy. cl..	3.2 to 0	3.00	0.94 to inf.	Makes own bed	.....	.....
	10	B	3d & 4th sp. same..	3.2 to 0	3.00	.....	"	.....	.....
	11	C	1st & 2d sp. No. 4 hy. classifier.	3.2 to 0	2.39	.....	H. No. 9 j., 3 mm. to 0.	.....	.....
	12	C	3d & 4th sp. same..	3.2 to 0	1.22	.....	"	.....	.....
42	1	A	Ov. Nos. 3 and 4 tr.	12.7 to 6.4	4 mesh.	.....	Makes own bed.....	.....	.....
	2	B	1st sp. No. 1 hy. cl.	6.4 to 0	4 " 8 "	.....	"	.....	.....
	3	B	2d spigot of same..	6.4 to 0	8 " 10 "	.....	"	.....	.....
	4	C	3d spigot of same..	6.4 to 0	10 " 12 "	.....	.....	.....	.....
	5	C	4th spigot of same.	6.4 to 0	12 " 14 "	.....	.....	.....	.....
	6	B	Tails of No. 2 jigs..	6.4 to 0	.....	.....	Makes own bed.....	.....	.....
	7	C	Tails of No. 3 jigs..	6.4 to 0	.....	.....	.....	.....	.....
	8	C	1st sp. No. 2 hy. cl.	6.4 to 0	12 mesh 14 "	.....	.....	.....	.....
	9	C	2d spigot of same..	6.4 to 0	12 " 14 "	.....	.....	.....	.....
	10	C	1st sp. No. 3 hy. cl.	6.4 to 0	12 " 14 "	.....	.....	.....	.....
	11	C	2d spigot of same..	6.4 to 0	12 " 14 "	.....	.....	.....	.....
	12	C	1st sp. No. 4 hy. cl.	6.4 to 0	14 "	.....	.....	.....	.....
	13	C	2d spigot of same..	6.4 to 0	14 "	.....	.....	.....	.....
	14	C	1st sp. No. 5 hy. cl.	10 mesh to 0	10 " 12 "	.....	.....	.....	.....
	15	C	2d spigot of same..	"	12 " 14 "	.....	.....	.....	.....
	16	C	1st sp. No. 6 hy. cl.	"	12 " 14 "	.....	.....	.....	.....
	17	C	2d spigot of same..	"	12 " 14 "	.....	.....	.....	.....
43	1	A	Oversize No. 1 tr...	25.4 to 11.1	4.29	0.17 to 0.39	Makes own bed.....	.....	.....
	2	B	1st sp. No. 1 hy. cl.	11.1 to 0	2.13 1.93	0.19 to inf. 0.17 to "	"	.....	.....
	3	B	2d spigot of same..	11.1 to 0	1.65	.....	"	.....	.....
	4	C	3d spigot of same..	11.1 to 0	1.65 1.30	.....	Hutch No 2 jig, 2.13 mm. to 0	.....	.....
	5	C	4th spigot of same.	11.1 to 0	0.99	.....	"	.....	.....
	6	C	(*j'*)	1.65 to 0	1.65 0.99	1.0 to inf. 0.60 to "	"	.....	1.3
	7	C	2d h. No. 4 & 5 jigs.	1.30 to 0	0.99	0.76 to "	"	.....	1.6
	8	A	Oversize No. 3 tr...	3 to 2	1.93 1.93 1.65	0.64 to 0.96 0.64 to 0.96 0.55 to 0.82	Makes own bed....	.....	.....
	9	B	Spigot No. 2 hy. cl.	2 to 0	1.93 1.65 1.65	0.96 to inf. 0.82 to " 0.82 to "	(1) Makes own bed. (2) Hutch No. 2 jig, (3) 2.13 mm. to 0	.....	1.06
44	1	B	(*k'*)	76.2 to 0	12.7	0.17 to "	Makes own bed.....	.....	.....
	2	B	1st sp. No. 1 hy. cl.	4.76 to 0	2.29 1.73	0.48 to " 0.36 to "	"	.....	.....

(a) Class A makes coarse concentrates and tailings; Class B makes coarse concentrates, hutches and tail-
(*j'*) Second hutch of No. 3 jig and third hutch of Nos. 8 and 9 jigs. (*k'*) Battery residue of steam stamps. (*l'*)
gether with the discharge of the first sieve go to smelter; the discharge of the second sieve goes to

TABLE 283.—PURPOSE AND ADJUSTMENTS OF JIGS.— *Continued.*

jig taken in order from the head to the tail.

Br.=Bryan; br'k'r=breakers; c.=concentrates; C. c.=Coarse concentrates; Cl.=Cleaning; cl.=classifier; ington mill; Hunt.=Huntington; hy.=hydraulic; hy. cl.=hydraulic classifier; inf.=infinity; j.=jig; K.= pr. or preced'g=preceding; p. t.=picking table; r.=rolls; s.=sieve; sc.=screen; sm.=smelter; sp.=spigot; unw.=unwaterer or unwatered; Unw. b.=Unwatering box; Z.=Zinc.

Mill Number.	Jig Number.	Coarse Concentrates. How Removed.	Destination of Products: Coarse Concentrates to	Destination of Products: Hutch Products to	Destination of Products: Tailings to	Amount of Plunger Throw.	No. of Throws per Minute.	Automatic Discharge: Height of Gate.	Automatic Discharge: Height of Dam.	Ratio of Height of Gate to Max. Grain of Feed.	Ratio of Height of Dam to Height of Tail.
						Inches.		In.	In.		
41	5	(1) (2) (3) None..... (4) Aut. dis.....	(1) (2) (3) None ..... (4) No. 2 rolls.....	(1) (2) (3) Sm .... (4) No. 2 r..	Waste....	1⅛	140	.....	.....	.....	.....
	6	None.....	None	Same as pr.	"	¾	160	.....	.....	.....	.....
	7	"	"	"	"	⅞	180	.....	.....	.....	.....
	8	"	"	"	"	⅞	200	.....	.....	.....	.....
	9	Aut. discharges	(1) (2) (3) Smelter ... No. 5 rolls....	(1) (2) (3) Sm..... No. 5 r..	"	1⅝	130	.....	.....	.....	.....
	10	"	Same as preced'g	Same as pr.	"	1⅛	140	.....	.....	.....	.....
	11	None.....	None.....	"	"	¾	160	.....	.....	.....	.....
	12	"	"	"	"	¼	180	.....	.....	.....	.....
42	1	Aut. tail dis	Smelter.....	Smelter....	Ball st. st..	1½	110	.....	.....	.....	.....
	2	Aut. side dis.....	"	"	No. 6 jig by unw.	.....	.....	.....	.....	.....	.....
	3	(1) None..... (2) Aut. side dis.	(1) None..... (2) Smelter.....	"	No. 7 jig by unw.	.....	.....	.....	.....	.....	.....
	4	None.....	None.....	(1) Smelter. (2) No. 2 hy cl	Waste....	.....	.....	.....	.....	.....	.....
	5	"	"	Same as pr.	" ...	.....	.....	.....	.....	.....	.....
	6	Aut. side dis.....	Rolls.....	(1) Smelter. (2) No. 3 hy cl	" ...	.....	.....	.....	.....	.....	.....
	7	None.....	None.....	Same as pr.	" ...	.....	.....	.....	.....	.....	.....
	8	"	"	(1) Smelter. (2) No. 4 hy cl	" ...	.....	.....	.....	.....	.....	.....
	9	"	"	Same as pr.	" ...	.....	.....	.....	.....	.....	.....
	10	"	"	"	" ...	.....	.....	.....	.....	.....	.....
	11	"	"	"	" ...	.....	.....	.....	.....	.....	.....
	12	"	"	Smelter	" ...	.....	.....	.....	.....	.....	.....
	13	"	"	"	" ...	.....	.....	.....	.....	.....	.....
	14	"	"	(1) Smelter. (2) No. 6 hy cl	" ...	.....	.....	.....	.....	.....	.....
	15	"	"	Same as pr.	" ...	.....	.....	.....	.....	.....	.....
	16	"	"	(1) Smelter. (2) No. 4 hy cl	" ...	.....	.....	.....	.....	.....	.....
	17	"	"	Same as pr.	" ...	.....	.....	.....	.....	.....	.....
43	1	Aut. discharge...	Smelter	No. 1 rolls..	Steam st...	3½	110	1½	.....	1.50	.....
	2	"	(1) Smelter..... (2) No. 1 rolls..	Smelter....	Waste.....	2	120	1	4½	2.29	1.00
	3	"	(1) Smelter..... (2) No. 1 rolls	(1) Smelter. (2) No. 6 jig	"	1½	120	1	4½	.....	1.00
	4	None.....	None.....	(1) Smelter. (2) No. 7 jig.	"	1	160	.....	.....	.....	.....
	5	"	"	(1) Smelter. (2) No. 7 jig.	Vanner..	¾	160	.....	.....	.....	.....
	6	"	"	(1) Smelter. (2) Rolls....	Waste....	¾	200	.....	.....	.....	.....
	7	"	"	(1) Smelter. (2) Rolls	" ...	¾	200	.....	.....	.....	.....
	8	Aut. discharge.	(1) (2) (3) Smelters .... Rolls.....	(1) (2) (3) Sm..... No. 6 jig.	" ...	1	225	¾	.....	6.35	.....
	9	(1) Automatic (2) discharge. (3) None.....	(1) (2) (3) Smelter.... None.....	Same as pr.	" ...	¾	250	¾	.....	9.53	.....
44	1	Skimming.....	Smelter.....	Smelter....	St. st. (*l'*)..	1¼	126–130	....	.....	.....	.....
	2	Aut. dis. (*m'*).....	(*m'*)	(1) Smelter. (2) No. 6 jig.	No. 10 jig	⅛ ⅞	134	¼	2	1.33	0.76 0.80

ings; Class C makes hutches and tailings. (*b*) These are the ratios of the maximum grains of each material. This includes the top skimmings. (*m'*) Both sieves are also skimmed every six hours. The skimmings to-Heberti mill.

TABLE 283.—PURPOSE AND ADJUSTMENTS OF JIGS.—*Continued.*

NOTE.—In some cases several values will be found for one jig. These are for the different sieves of the

Abbreviations.—Aut.=Automatic; Aut. dis.=Automatic discharge; b. cl.=box classifier; B'low=Below; dis.=discharge; dist.=distributor; Gr.=Graded from; H.=Hutches of; h.=hutch; H. m. or Hunt. m.=Hunt-Kieve; L.=Lead; lbs.=pounds; m.=mill; ma.=machine; Max.=Maximum; No.=Number; Ov.=Oversize of; st.=stamp; st. st.=steam stamp; T.=Tailings of; tr.=trommel; Tr. ma.=Trunking machine; Un.=Undersize;

Mill Number.	Jig Number.	Class of Jig. (a)	Material of Feed.	Size of Feed.	Net Diameter of Screen Hole.	Ratio of Diameter of Screen Hole to Diameter of Feed.	Material of Bottom Bed.	Thickness of Bed.	Ratio of Diameter of Bed Material to Diameter of Feed. (b)
				Mm.	Mm.			Inches.	
44	3	B	2d spigot of same..	4.76 to 0	1.73 1.55	.....	Makes own bed.....	.....	.....
	4	C	3d spigot of same..	4.76 to 0	1.55 1.09	.....	C. c. No. 2 jig, 4.76 to 2.29 mm.	.....	.....
	5	C	4th spigot of same.	4.76 to 0	1.09 0.91	.....	"	.....	.....
	6	B	2d hutch No. 2 jig..	1.73 to 0	1.73 1.55 1.09	1.0 to inf. 0.90 to " 0.63 to "	Makes own bed.....	.....	.....
	7	B	1st & 2d h. No. 3 jig.	1.73 to 0	1.55 1.09 1.09	0.90 to " 0.63 to " 0.63 to "	"	.....	.....
	8	B	1st & 2d h. No. 4 jig.	1.55 to 0	1.09 0.81 0.81	0.70 to " 0.52 to " 0.52 to "	"	.....	.....
	9	B	1st & 2d h. No. 5 jig.	1.09 to 0	1.09 0.81 0.81	1.0 to " 0.74 to " 0.74 to "	"	.....	.....
	10	B	T. Nos. 2 & 3 jigs...	4.76 to 0	.....	.....	"	.....	.....
	11	C	Hutches No. 10 jigs	.....	.....	.....	Copper sand.....	.....	.....
	12	B	1st sp. No. 2 hy. cl.	2.54 to 0	1.55 1.09 1.09	0.61 to inf. 0.43 to " 0.43 to "	Makes own bed.....	.....	.....
	13	B	2d spigot of same..	2.54 to 0	1.55 1.09 0.81	.....	"	.....	.....
	14	B	3d spigot of same..	2.54 to 0	1.09 1.09 0.81	.....	"	.....	.....
	15	C	Hutches Nos. 12, 13 and 14 jigs.	1.55 to 0	.....	.....	.....	.....	.....
46	1	B	1st sp. No. 1 hy. cl.	4.76 to 0	2.29 1.73	0.48 to inf. 0.36 to "	Makes own bed.....	.....	.....
	2	B	2d spigot of same..	4.76 to 0	1.73 1.30	.....	"	.....	.....
	3	B	3d spigot of same..	4.76 to 0	1.30	.....	"	.....	.....
	4	C	4th spigot of same.	4.76 to 0	1.30 1.17	.....	C. c. No. 1 jig, 4.76 to 2.29 mm.	.....	.....
	5	C	5th spigot of same.	4.76 to 0	1.17	.....	"	.....	.....
	6	C	6th spigot of same.	4.76 to 0	1.17 1.09	.....	"	.....	.....
	7	B	1st hutch Nos. 1 and 2 jigs.	2.29 to 0	1.73 1.30 1.30	0.76 to inf. 0.57 to " 0.57 to "	Makes own bed.....	.....	.....
	8	B	2d hutch Nos. 1 and 2 jigs.	1.73 to 0	1.30 1.17 1.17	0.75 to " 0.68 to " 0.68 to "	"	.....	.....
	9	B	1st hutch Nos. 3 and 4 jigs.	1.30 to 0	1.30 1.17 1.17	1.0 to " 0.90 to " 0.90 to "	"	.....	.....
	10	B	2d hutch Nos. 3 and 4 jigs.	1.30 to 0	1.17 1.17 1.09	0.90 to " 0.90 to " 0.84 to "	"	.....	.....
	11	B	1st hutch Nos. 5 and 6 jigs.	1.17 to 0	1.17 1.09 1.09	1.0 to " 0.93 to " 0.93 to "	"	.....	.....
	12	B	2d hutch Nos. 5 and 6 jigs.	1.17 to 0	1.09 0.97 0.97	0.93 to " 0.83 to " 0.83 to "	"	.....	.....
47	1	B	(k')	25.4 to 0	1.91	0.08 to "	"	.....	.....
	2	B	1st sp. No. 1 hy. cl.	4.76 to 0	3.35 2.46	0.70 to " 0.52 to "	"	.....	.....

(a) Class A makes coarse concentrates and tailings; Class B makes coarse concentrates, hutches and tail- (k') Battery residue of steam stamps. (n') Both sieves skimmed every six hours and the skimmings go every three days. (p') By skimming every seven days. (q') Automatic discharges on the first and second go to smelter and skimmings to Heberli mills. (r') By skimming every twelve hours. (s') By skimming every six hours. (v') By skimming every six hours. (w') By automatic discharges on the first and third sieves three sieves. (y') By skimming occasionally. (z') By skimming every two or three hours. (a'') By skimming

TABLE 283.—PURPOSE AND ADJUSTMENTS OF JIGS.—*Continued.*

jig taken in order from the head to the tail.

Br.=Bryan; br'k'r=breakers; c.=concentrates; C. c.=Coarse concentrates; Cl.=Cleaning; cl.=classifier; ington mill; Hunt.=Huntington; hy.=hydraulic; hy. cl.=hydraulic classifier; inf.=infinity; j.=jig; K.= pr. or preced'g=preceding; p. t.=picking table; r.=rolls; s.=sieve; sc.=screen; sm.=smelter; sp.=spigot; unw.=unwaterer or unwatered; Unw. b.=Unwatering box; Z.=Zinc.

Mill Number.	Jig Number.	Coarse Concentrates. How Removed.	Destination of Products. Coarse Concentrates to	Hutch Products to	Tailings to	Amount of Plunger Throw.	No. of Throws per Minute.	Automatic Discharge. Height of Gate.	Height of Dam.	Ratio of Height of Gate to Max. Grain of Feed.	Ratio of Height of Dam to Height of Tail.
						Inches.		In.	In.		
44	3	Aut. dis. (n').....	(n')	No. 7 jig...	No. 10 jig..	5/8	134	1/4	2	.....	0.76
	4	(o')	No. 3 jig.....	No. 8 jig...	Waste.....	1/4	134	.....	.....	.....	.....
	5	(p')	No. 4 jig.....	No. 9 jig....	"	3/16	134	.....	.....	.....	.....
	6	(q')	(q')	Smelter....	"	5/8 7/16	133	1/4	.....	3.67	.....
	7	(1) Aut. dis..... (2) (r') ..... (3) (s')	(1) Smelter..... (2) Heberli mills (3) No. 6 jig....	"	"	1/2 1/2 1/4	133	1/4	.....	3.67	.....
	8	(1) (r') ..... (2) (s') ..... (3) (t')	(1) Heberli mills (2) No. 11 jig... (3) Smelter.....	"	"	1/2 1/2 1/2	133	.....	.....	.....	.....
	9	Same as preced'g	Smelter.....	"	"	3/4 1/2 1/2	133	.....	.....	.....	.....
	10	(u')	Heberli mills....	No. 11 jig..	"	5/8	133	.....	.....	.....	.....
	11	(v')	"	Smelter....	"	1/2	133	.....	.....	.....	.....
	12	(w')	Smelter.....	(1) (2) Sm..... (3) No. 15 jig	"	1/2 7/16 3/4	133	.....	.....	.....	.....
	13	(x')	"	(1) Smelter. (2) (3) No. 15 jig.	"	7/16 1/2 1/2	133	.....	.....	.....	.....
	14	Same as preced'g	Same as preced'g	No. 15 jig...	"	1/2 3/4 7/16	133	.....	.....	.....	.....
	15	(y')	Smelter.....	Smelter....	"	.....	.....	.....	.....	.....	.....
46	1	(1) (z') (2) Aut. dis.....	(1) Smelter..... (2) Steam stamp..	(1) No. 7 jig. (2) No. 8 jig.	"	1 to 3/4 3/4 to 5/8	132	.....	.....	.....	.....
	2	(r')	Same as pr.....	(1) No. 7 jig. (2) No. 8 jig.	"	5/8 7/16	132	.....	.....	.....	.....
	3	(1) (o') (2) (a'')	"	(1) No. 9 jig. (2) No. 10 jig	"	5/8 7/16	132	.....	.....	.....	.....
	4	(o')	(1) No. 3 jig..... (2) Steam stamp..	(1) No. 9 jig. (2) No. 10 jig	"	7/16 5/8	132	.....	.....	.....	.....
	5	(o')	Same as pr.....	(1) No. 11 jig (2) No. 12 jig	"	5/8 7/16	132	.....	.....	.....	.....
	6	(o')	"	(1) No. 11 jig (2) No. 12 jig	"	5/8 7/16	132	.....	.....	.....	.....
	7	(1) (s') (2) (r') (3) (r')	(1) (2) Smelter..... (3) Steam stamp..	(1) (2) Sm .... (3) Kieve...	"	1/2 5/8 5/8	132	.....	.....	.....	.....
	8	(1) (s') (2) (r') (3) (r')	Same as preced'g	Same as pr.	"	5/8 7/16 7/16	132	.....	.....	.....	.....
	9	(r')	"	"	"	5/8 7/16 7/16	132	.....	.....	.....	.....
	10	(r')	"	"	"	7/16 7/16 3/4	132	.....	.....	.....	.....
	11	(r')	"	(1) Smelter. (2) (3) Kieve..	"	3/4 7/16 7/16	132	.....	.....	.....	.....
	12	(r')	"	Same as pr.	"	3/4 7/16 7/16	132	.....	.....	.....	.....
47	1	Skimming.....	Smelter	No. 1 by. cl.	Steam st...	1 1/16	.....	1 1/4	2	1.25	0.44
	2	"	(1) Picking tables (2) Steam stamp.	(1) No. 6 jig. (2) No. 7 jig.	Waste....	5/8 7/16	132	.....	.....	.....	.....

ings; Class C makes hutches and tailings. (*b*) These are the ratios of the maximum grains of each material. to No. 2 jig. The second sieve has also an automatic discharge which goes to Heberli mill. (*o'*) By skimming sieves; the second sieve is also skimmed every twelve hours and the third sieve every three hours. Discharges three hours. (*t'*) By skimming every three weeks. (*u'*) Automatic discharges and also skimming every and by skimming on all three sieves. (*x'*) By automatic discharge on the third sieve and by skimming on all every twenty-four hours.

TABLE 283.—PURPOSE AND ADJUSTMENTS OF JIGS.—*Continued.*

NOTE.—In some cases several values will be found for one jig. These are for the different sieves of the

Abbreviations.—Aut.=Automatic; Aut. dis.=Automatic discharge; b. cl.=box classifier; B'low=Below; dis.=discharge; dist.=distributor; Gr.=Graded from; H.=Hutches of; h.=hutch; H. m. or Hunt. m.=Hunt-Kieve; L.=Lead; lbs.=pounds; m.=mill; ma.=machine; Max.=Maximum; No.=Number; Ov.=Oversize of; st.=stamp; st. st.=steam stamp; T.=Tailings of; tr.=trommel; Tr. ma.=Trunking machine; Un.=Undersize.

Mill Number.	Jig Number.	Class of Jig. (a)	Material of Feed.	Size of Feed.	Net Diameter of Screen Hole.	Ratio of Diameter of Screen Hole to Diameter of Feed.	Material of Bottom Bed.	Thickness of Bed.	Ratio of Diameter of Bed Material to Diameter of Feed. (b)
				Mm.	Mm.			Inches.	
47	3	B	3d spigot of same..	4.76 to 0	2.46 1.55	.....	Makes own bed.....	.....	.....
	4	C	3d spigot of same..	4.76 to 0	1.55 1.30	.....	C. c. No. 2 jig, 4.76 to 3.35 mm.	.....	.....
	5	C	4th spigot of same.	4.76 to 0	1.36 1.14	.....	"	.....	.....
	6	B	1st hutch Nos. 2 and 3 jigs.	3.35 to 0	1.91 1.55 1.30	0.57 to inf. 0.46 to " 0.39 to "	Makes own bed.....	.....	.....
	7	B	2d hutch Nos. 2 and 3 jigs.	2.46 to 0	1.55 1.30 1.14	0.63 to " 0.53 to " 0.46 to "	"	.....	.....
	8	C	1st hutch Nos. 4 and 5 jigs.	1.55 to 0	1.30 1.14 1.14	0.84 to " 0.74 to " 0.74 to "	C. c. No. 6 jig, 3.35 to 1.91 mm.	.....	.....
	9	C	2d hutch Nos. 4 and 5 jigs.	1.30 to 0	1.30 1.14 1.14	1.0 to " 0.88 to " 0.88 to "	"	.....	.....
48	1	B	1st sp. No. 1 hy. cl.	4.76 to 0	2.29 1.73	0.48 to " 0.36 to "	Makes own bed.....	.....	.....
	2	B	2d spigot of same..	4.76 to 0	1.73 1.30	.....	"	.....	.....
	3	B	3d spigot of same..	4.76 to 0	1.30 1.17	.....	"	.....	.....
	4	C	4th spigot of same.	4.76 to 0	1.17 1.09	.....	C. c. No. 1 jig, 4.76 to 2.29 mm.	.....	.....
	5	B	1st hutch Nos. 1 and 2 jigs.	2.29 to 0	1.73 1.30 1.30	0.76 to inf. 0.57 to " 0.57 to "	Makes own bed.....	.....	.....
	6	B	2d hutch Nos. 1 and 2 jigs.	1.73 to 0	1.30 1.30 1.17	0.75 to " 0.75 to " 0.68 to "	"	.....	.....
	7	C	1st hutch Nos. 3 and 4 jigs.	1.30 to 0	1.17 1.17 1.09	0.90 to " 0.90 to " 0.84 to "	C. c. No. 5 jig, 2.29 to 1.73 mm.	.....	1.8
	8	C	2d hutch Nos. 3 and 4 jigs.	1.17 to 0	1.09 0.97 0.97	0.93 to " 0.83 to " 0.83 to "	"	.....	2.0
85	1	f''	Oversize No. 2 tr...	4 to 8 mesh..	.....	.....	Makes own bed.....	.....	.....
	2	C	Oversize No. 3 tr...	8 to 12 mesh.	.....	.....	.....	.....	.....
	3	C	Spigot No. 1 hy. cl.	12 mesh to 0..	.....	.....	.....	.....	.....
86	1	B	Oversize No. 2 tr...	9 to 6.5	7.11 6.05 6.05	0.79 to 1.1 0.67 to 0.93 0.67 to 0.93	Makes own bed.....	.....	.....
	2	B	Oversize No. 3 tr...	6.5 to 3	4.24	0.65 to 1.4	"	.....	.....
	3	C	Oversize No. 4 tr...	3 to 1.25	3.25	1.1 to 2.6	.....	.....	.....
	4	C	Oversize No. 5 tr...	(h'')	1.70	— to 1.9	.....	.....	.....
87	1	B	Oversize No. 2 tr...	3 or 4 to 6 mesh.	4 mesh.	.....	Makes own bed.....	.....	.....
	2	C	Oversize No. 3 tr...	6 to 8 mesh.	6 mesh.	.....	Hutch No. 1 jig, 3 or 4 to 6 mesh.	.....	.....
	3	C	Oversize No. 4 tr...	8 to 12 mesh.	8 "	.....	"	.....	.....
	4	C	1st sp. No. 1 hy. cl.	12 mesh to 0	10 "	.....	H.No. 2 j., 6 to 8 mesh	.....	.....
	5	C	2d spigot of same..	12 mesh to 0	12 "	.....	"	.....	.....
	6	C	Spigot No. 2 hy. cl.	24 or 30 mesh to 0	24 or 30 mesh.	.....	.....	.....	.....
88	1	C	Oversize No. 2 tr...	3 to 6 mesh.	3 mesh.	.....	.....	.....	.....

(a) Class A makes coarse concentrates and tailings; Class B makes coarse concentrates, hutches and tail-
(o') By skimming every three days. (r') By skimming every twelve hours. (v') By skimming every six hours.
eight hours. (d'') By skimming every forty-eight hours. (e'') By skimming every eighteen hours. (f'') A or
Gravity stamps by unwatering box.

Digitized by Google

TABLE 283.—PURPOSE AND ADJUSTMENTS OF JIGS.—*Continued.*

jig taken in order from the head to the tail.

Br.=Bryan; br'k'r=breakers; c.=concentrates; C. c.=Coarse concentrates; Cl.=Cleaning; cl.=classifier; ington mill; Hunt.=Huntington; hy.=hydraulic; hy. cl.=hydraulic classifier; inf.=infinity; j.=jig; K.= pr. or preced'g=preceding; p. t.=picking table; r.=rolls; s.=sieve; sc.=screen; sm.=smelter; sp.=spigot; unw.=unwaterer or unwatered; Unw. b.=Unwatering box; Z.=Zinc.

Mill Number.	Jig Number.	Coarse Concentrates. How Removed.	Destination of Products. Coarse Concentrates to	Hutch Products to	Tailings to	Amount of Plunger Throw.	No. of Throws per Minute.	Automatic Discharge. Height of Gate.	Automatic Discharge. Height of Dam.	Ratio of Height of Gate to Max. Grain of Feed.	Ratio of Height of Dam to Height of Tail.
						Inches.		In.	In.		
47	3	Skimming.....	(1) Smelter..... (2) Steam stamp.	(1) No. 6 jig. (2) No. 7 jig.	Waste....	½	132	.....	.....	.....	.....
	4	"	No. 3 jig.....	(1) No. 8 jig. (2) No. 9 jig.	" ...	⅝	132	.....	.....	.....	.....
	5	"	"	(1) No. 8 jig. (2) No. 9 jig.	" ...	⅝	132	.....	.....	.....	.....
	6	(r′)	(1) Picking table. (2) (3) Smelter.....	(1) Sm .... (2) (3) Sm. or K.	" ...	½	132	.....	.....	.....	.....
	7	(r′)	Smelter.....	(1) Smelter. (2) Sm. or K. (3) Kieve...	" ...	⅝	132	.....	.....	.....	.....
	8	(b″)	No. 7 jig.....	(1) Smelter. (2) (3) Kieve..	" ...	¼	132	.....	.....	.....	.....
	9	(b″)	"	(1) Smelter. (2) (3) Kieve..	" ...	½	132	.....	.....	.....	.....
48	1	(1) (v′) (2) Aut. dis.....	(1) Smelter..... (2) Steam stamp..	(1) No. 5 jig. (2) No. 6 jig.	" ...	1 to ¾ ⅞ to ⅝ ⅝ to ⅝ ¾ to ⅝ ⅝ to ½ ½ to ⅜	125	.....	.....	.....	.....
	2	(1) (r′) (2) (c″)	Same as pr.....	(1) No. 5 jig. (2) No. 6 jig.	" ...	⅝ to ⅝ ¾ to ⅝ ⅝ to ½ ½ to ⅜	125	.....	.....	.....	.....
	3	(a″)	"	(1) No. 7 jig. (2) No. 8 jig.	" ...	⅝ to ½ ½ to ⅜	125	.....	.....	.....	.....
	4	(a″)	Steam stamp..	(1) No. 7 jig. (2) No. 8 jig.	" ...	⅝ ½ ¾	125	.....	.....	.....	.....
	5	(1) (r′) (2) (a″) (3) (d″)	Smelter.....	(1) Sm ... (2) (3) Rejigger	" ...	½ ½ ⅝ ⅝	125	.....	.....	.....	.....
	6	(1) (a″) (2) (e″) (3) (a″)	"	Same as pr.	" ...	⅝ ½ ½	125	.....	.....	.....	.....
	7	(1) (o′) (2) (a″) (3) (a″)	"	"	" ...	½ ½ ¾ ½ ½	125	.....	.....	.....	.....
	8	(a″)	"	"	" ...	¾ ½ ½	125	.....	.....	.....	.....
85	1	Aut. discharges .	"	Smelter....	No. 1 unw. b.	.....	.....	.....	.....	.....	.....
	2	None.....	None.....	"	"	.....	.....	.....	.....	.....	.....
	3	"	"	"	"	.....	.....	.....	.....	.....	.....
86	1	Aut. discharges .	(g″)	(1) (2) Sm .... (3) Cl. jig...	Hunt. mill after unwatering.	.....	160	.....	.....	.....	.....
	2	" ...	(g″)	(1) (2) Sm .... (3) Cl. jig...	"	.....	190	.....	.....	.....	.....
	3	None.....	None.....	(1) (2) Sm .... (3) Cl. jig...	"	.....	236	.....	.....	.....	.....
	4	"	"	(1) Smelter. (2) Cl. jig... (3) Hunt. m.	Waste....	.....	280	.....	.....	.....	.....
87	1	Aut. discharges .	Smelter.....	Smelter....	(i″)	.....	153	⅛ ⅛ ⅜	2½ 3 3½	....	0.71 0.86 1.00
	2	None.....	None.....	"	(i″)	.....	166	.....	.....	.....	.....
	3	"	"	"	(i″)	.....	178	.....	.....	.....	.....
	4	"	"	"	(i″)	.....	178	.....	.....	.....	.....
	5	"	"	"	(i″)	.....	204	.....	.....	.....	.....
	6	"	"	"	Waste.....	.....	.....	.....	.....	.....	.....
88	1	"	"	"	(i″)	⅞, ¾, ⅝, ½	200	.....	.....	.....	.....

ings; Class C makes hutches and tailings. (*b*) These are the ratios of the maximum grains of each material. (*a″*) By skimming every twenty-four hours. (*b″*) By skimming every six months. (*c″*) By skimming every B. (*g″*) Probably the same as the hutch products. (*h″*) Through 0.545-mm. slot on 0.88-mm. square hole. (*i″*)

TABLE 283.—PURPOSE AND ADJUSTMENTS OF JIGS.—*Concluded.*

NOTE.—In some cases several values will be found for one jig. These are the different sieves of the

Abbreviations.—Aut.=Automatic; Aut. dis.=Automatic discharge; b. cl.=box classifier; B'low=Below; dis.=discharge; dist.=distributor; Gr.=Graded from; H.=Hutches of; h.=hutch; H. m. or Hunt. m.=Hunt-Kieve; L.=Lead; lbs.=pounds; m.=mill; ma.=machine; Max.=Maximum; No.=Number; Ov.=Oversize of; st.=stamp; st. st.=steam stamp; T.=Tailings of; tr.=trommel; Tr. ma.=Trunking machine; Un.=Undersize;

Mill Number.	Jig Number.	Class of Jig. (a)	Material of Feed.	Size of Feed.	Net Diameter of Screen Hole.	Ratio of Diameter of Screen Hole to Diameter of Feed.	Material of Bottom Bed.	Thickness of Bed.	Ratio of Diameter of Bed Material to Diameter of Feed. (b)
				Mm.	Mm.			Inches.	
88	2	C	Oversize No. 3 tr...	6 to 10 mesh	4 " 6 " 6 " 6 " 8 "	.....	Hutch No. 1 jig, 3 to 6 mesh.	.....	.....
	3	C	1st sp. No. 1 hy. cl.	10 mesh to 0	10 " 10 " 10 "	.....	"	.....	.....
	4	C	2d spigot of same..	10 mesh to 0	8 " 10 " 10 "	.....	"	.....	.....
	5	C	1st sp. No. 2 hy. cl.	10 mesh to 0	10 " 10 " 16 "	.....	Hutch No. 1 jig, 3 to 6 mesh.	.....	.....
	6	C	Spigot No. 3 hy. cl.	0.64 to 0	.....	.....	.....	.....	.....
92	1	B	Tailings magnetic concentrators.	10 to 16 mesh.	8 mesh 8 " 12 " 12 "	.....	Makes own bed.....	.....	.....
	2	B	"	16 to 24 mesh.	12 " 14 " 14 " 16 "	.....	"	.....	.....
	3	C	"	24 to 30 mesh.	14 " 14 " 16 "	.....	.....	.....	.....
	4a	C	"	30 to 50 mesh.	18 "				
	4	C	"	30 to 50 mesh.	18 "	.....	.....	.....	.....

(a) Class A makes coarse concentrates and tailings; Class B makes coarse concentrates, hutches and tail-
(b') Gravity stamps by unwatering box.

Jigs treating sized products from screens: Class A, 76; class B, 12; class C, 26; class A or B, 1; total, 115.

Jigs treating first spigot product from classifiers: Class A, 0; class B, 33; class C, 21; class B and C, 1; total, 55.

Jigs treating later spigot products from classifiers: Class A, 0; class B, 32; class C, 55; total, 87.

Jigs treating natural or unsized products: Class A, 0; class B, 7; class C, 5; total, 12.

Jigs treating hutch products of preceding jigs: Class A, 0; class B, 17; class C, 8; total, 25.

Jigs treating tailings from preceding jigs: Class A, 0; class B, 2; class C, 1; total, 3.

Jigs treating both sized products from screens and hutch products from preceding jigs: Class A, 0; class B, 3; class C, 0; total 3.

Class A, including jigs which make coarse concentrates and tailings with incidental hutch.—This method of jigging is applicable only to sized products, it being used in this country on about two-thirds of all the jigs of the group. The advantages of jigging sized products by this method are, that the jig makes its own bottom bed and, therefore, saves the wear on special bottom bed material, as well as the trouble and expense of providing it, and that there is no grain in the feed which is the same size as the sieve hole to cause blinding of the sieve.

There is one jig in this group (No. 2 jig of Mill 16), which is noteworthy as making no coarse concentrates on its last sieve. This is probably due to the fact

TABLE 283.—PURPOSE AND ADJUSTMENTS OF JIGS.—*Concluded.*

jig taken in order from the head to the tail.

Br.=Bryan; br'k'r=breakers; c.=concentrates; C. c.=Coarse concentrates; Cl.=Cleaning; cl.=classifier; ington mill; Hunt.=Huntington; hy.=hydraulic; hy. cl.=hydraulic classifier; inf.=infinity; j.=jig; K.= pr. or preced'g=preceding; p. t.=picking table; r.=rolls; s.=sieve; sc.=screen; sm.=smelter; sp.=spigot; unw.=unwaterer or unwatered; Unw. b.=Unwatering box; Z.=Zinc.

Mill Number.	Jig Number.	Coarse Concentrates. How Removed.	Destination of Products. Coarse Concentrates to	Destination of Products. Hutch Products to	Destination of Products. Tailings to	Amount of Plunger Throw.	No. of Throws per Minute.	Automatic Discharge. Height of Gate.	Automatic Discharge. Height of Dam.	Ratio of Height of Gate to Max. Grain of Feed.	Ratio of Height of Dam to Hight of Tail.
						Inches.		In.	In.		
88	2	None.....	None.....	Smelter....	(b″)	¾	200	.....	.....	.....	.....
	3	"	"	"	Stamps....	½	210	.....	.....	.....	.....
	4	"	"	"	"	⅜, ¼, 3/16	230	.....	.....	.....	.....
	5	"	"	"	"	⅛, 3/16, 1/16	200	.....	.....	.....	.....
	6	"	"	"	Waste.....	3/16, 3/16, ⅛	210	.....	.....	.....	.....
93	1	Ant. discharge.	(1) (2) (3) Smelter..... (4) Rejigged.....	(1) (2) (3) Sm .... (4) Rejigged	"	.....	150	.....	.....	.....	.....
	2	"	Same as preced'g	Same as pr.	"	.....	200	.....	.....	.....	.....
	3	None.....	None.....	(1) (2) Sm .... (3) Rejigged	"	.....	225	.....	.....	.....	.....
	4a	"	"	Smelter....	"	.....	250	.....	.....	.....	.....
	4	"	"	(1) Smelter. (2) Rejigged	"	.....	250	.....	.....	.....	.....

ings; Class C makes hutches and tailings. (*b*) These are the ratios of the maximum grains of each material.

that the previous sieves remove all the concentrates, so that the last one has nothing to do or simply acts as a guard.

Class B, including jigs which make coarse concentrates, hutch and tailings.—This method of jigging is used on more jigs than class A. It is used on all kinds of products, but it is especially applied to the first spigot products from classifiers and natural products, such as the entire undersize of a trommel in the Missouri lead and zinc mills (9, 10, 16 and 25), the product coming to an intermediary jig (Jig 4, Mill 23), and that coming to the cōver jigs of Lake Superior (No. 1 jigs of Mills 44 and 47).

The advantages of jigging sized or unsized products by this system are: It makes its own bottom bed, with a relatively coarse sieve; there is a freer passage of the water; and greater capacity is obtainable, since the concentrates are removed from both discharge and hutch. With strong suction it may not cause a serious loss of fines. It may do away with more or less preliminary screening and classifier work, that is, do away with the necessity of close sizing, owing to the fact that the bottom bed is more open for the action of suction.

The disadvantage is that there is a large percentage of particles of the same size as the holes of the sieve, and these tend to blind the sieve; they do so all the more, owing to the strong suction which is needed. There are exceptions to this rule. The jigs treating the first spigot products from classifiers in Mills 44, 46, 47 and 48 have their screens protected by flat, heavy scales of copper, which guard the sieve, and also by the gentle suction action given by the Collom jig.

The Missouri zinc jigs (Mills 9 and 10), are not reported as giving serious

trouble in this respect. This may be due to the coarseness of the sieve and to the fact that it is freed by blows of the coarse fragments of the bottom bed. Some of the jigs in this class deserve especial attention; for example, Mills 15, jig 4, 16-3, 30-6, 31-7, 32-5-6-8-9, 33-4, 35-9-10-11, 36-4, 38-5-9-13-14, 39-9-10, 41-5, 42-3 and 43-9, all omit the automatic discharge on one or more sieves, the reason being that there are not enough coarse concentrates formed to run continuously from all the sieves. The choice of the discharges to be plugged varies on different jigs. Of the above 22 jigs, 15 plug the earlier discharges, 4 plug the later ones, and 3 plug the middle ones. On other jigs, for example, Mill 22, jig No. 4, the difficulty is overcome by running the discharges intermittently.

Jigs No. 9 and No. 10 of Mill 39 vary from all the others of this class in that there is put upon them a thin bottom bed in addition to the bottom bed which they make themselves, making a total thickness of bottom bed of 2½ to 3 inches. In this case the gate of the automatic discharge has to be high enough so that the coarse concentrates may pass out over the bottom bed material without disturbing it. Jigs No. 7, 8, 10, 11, 12, 13 and 14 of Mill 38 and jig No. 9 of Mill 43 also have a bottom bed put on.

§ 426. *Class C, including jigs which make only hutch and tailings.*—This method is used upon all kinds of fine products and more jigs are run this way than by either of the two other methods. It is especially applied to the later spigot products from classifiers, which are necessarily fine. It is also commonly used for jigging coal with a feldspar bottom bed.

The advantages of this method of jigging sized or unsized products are: It increases the capacity of a jig over Class A by discharging concentrates all over the sieve instead of in one place only, making it particularly favorable for an ore with a large percentage of concentrates, and sometimes even, the capacity may be over Class B, because a coarser bottom bed and sieve can be used; it requires less attention than A or B, it being easier to regulate the discharge of concentrates through the sieve than in other methods of discharging; no size of grain is fed to it which tends to blind the screen, the only grains of that character being those which accidentally crumble off the bottom bed; close sizing is not so necessary with sized feed; it uses a coarser screen and, therefore, has a freer passage for the water and a freer working whole bed.

The disadvantages are that the heavy, coarse bottom bed required for large sizes consumes more power to raise it, and the bottom bed wears out more or less rapidly and must be replaced. There will naturally be a limit beyond which it will not pay to take advantage of this method. Examples of the limits in the mills are as follows: Mill 13 has a maximum grain of 19.1 mm.; Mill 14, 22.2 mm.; Mill 20, 6.4 mm.; Mill 26, 5.7 mm.; Mill 86, 9.0 mm. Kunhardt gives the maximum at Lauremberg as 35 mm.

In this class will be found many jigs which would appear at first sight to belong in Class B, that is, the maximum grain fed to them is larger than the size of the hole in the sieve. The reason that no coarse concentrates are made is that, for the most part, these jigs treat the later spigot products from classifiers in which the coarser grains are all gangue and the finer portions contain the mineral, and the screens used need be only coarse enough to allow the latter to pass, but not necessarily the former. Mill 43, jigs 7 and 8, Mill 47, jig 8 and Mill 48, jig 7, are not spigot jigs and cannot be explained in that way. The inconsistency in them is probably due to the fact that the feed is finer, or the screen hole is larger than given in Table 283, but as to which is in error, the author is unable to say.

Many mills have products which seem well adapted for this treatment, but yet it is not used. This is accounted for in some mills by the fact that no suitable bottom bed material is at hand to supply to the jig, and in others because

the quantity of concentrates is not large enough to warrant its use. In the latter case the gangue would tend to work down into the concentrates, to prevent which, a bottom bed too thick to be economical would need to be used.

In this connection, the experience of Mill 21 is noteworthy. Here the discharge of coarse concentrates was tried and condemned as too slow for an ore with so large a percentage of concentrates. As a consequence, all the jigs form concentrates in the hutch only, except No. 1 jig, which has to make its own bottom bed, there being no other material suitable to put on it.

§ 427. Size of Sieve Hole.—This affects the jigging in other ways than by the percentage of opening already discussed (see § 417). The larger the hole, relatively to the feed, the more freely will the fine grains reach the hutch and the less will the whole bed be clogged by their presence.

The practice in this matter may be expressed by the ratio of the diameter of the hole in the sieve to the diameter of the grains in the feed. This ratio has been computed and is given in Table 283. These ratios are divided into three groups corresponding to the three classes of jigs just considered.

The jigs of class A make their own bottom beds and the ratio is less than 1.0. The range, as shown in the table, is from 0.09 to 1.0. It is probably best to use a large ratio, as the coarse sieve will last longer and cost less. This jig will be run with little suction. Linkenbach (see Table 280), recommends for this class of jigs the ratio for the size of hole to the minimum size of feed, 1:2 for the grains above 5 mm., 1 : 1½ for 3-mm. and 1 : 1 ⅓ for 2-mm. grains, and below 2 mm. he recommends that the jig treating sized products be put into Class B.

Jigs of Class B make their own bottom beds and the ratios for the diameter of the hole to the maximum grains of the feed, range from 0.08 to 1.3 and for the minimum grains from 0.93 to 1.4 on sized products and to infinity on other products. For consistency, the ratio for the maximum grain must be below 1.0 and that for the minimum above 1.0, and the inconsistencies in the table are probably due to inaccuracy in designating screens. It would seem best to have the ratio for maximum grains nearly equal to 1.0, as this secures large interstices and as free passage as possible, in which the suction may act. This jig needs a thicker bottom bed than a Class A jig, because it will be run with strong suction, but thinner than a Class C jig, because its interstices are so small.

The jigs of Class C should have the ratio greater than 1.0 on all products except the later spigot products of a classifier and the tailings of jigs, in order to let the concentrates through the sieve. On these two, however, it may be less than 1.0, owing to the fact that the concentrates are all in the finer part of the feed. No ratios are given on the later spigot products from the classifiers, as the data on the size of grains is too uncertain. On other products the ratios range for the maximum grains from 0.6 to 2.3 and for the minimum grains from 1.6 up to 3.1 for sized products and up to infinity for other products. Any inconsistencies are probably due to irregularities of sieve holes. The ratio should never be large enough to allow the bottom bed material to pass through, probably never greater than 3.5 (see § 430).

Jigs of Classes B and C in many mills use a larger hole in the first sieve than in the later ones, because the first sieve is called upon to make so much more hutch work than the others and, therefore, needs to work freely. Mills 22 and 30 use this principle even in jigs of Class A.

§ 428. Material of Bottom Bed.—The remarks in general under this head apply not only to the bottom beds which are put upon jigs, but to the bottom beds which naturally form on them. The bottom bed should be as nearly as possible of the same specific gravity as that of the concentrates; in fact, the same mineral should be used whenever possible. If much heavier, it requires excessive power

to lift it and in that case causes excessive boiling of the top layer, and if it is not lifted, the quicksand effect of the liquid bottom bed is lost and it simply acts under hindered settling conditions in many small tubes. These remarks do not apply when a few shot are mixed with the ore. If the bottom bed is much lighter it lets gangue into the hutch.

From the above statement of principles it will be seen that it is suitable to supply the earlier sieves of a jig with a bottom bed of the purest mineral and the later sieves, which are used to remove the last and most-difficult-to-catch particles, with one of middlings composed of included grains of gangue and concentrates. This practice is quite general.

If the bottom bed is of low specific gravity, for example, middlings or even blende, it refuses to remain level (see Fig. 333); it forms much deeper at the tail than at the head and is in danger of working off over the tail. This difficulty is met in two ways: In Mill 9 the sieve slopes up one inch in its length, so that the sieve becomes approximately parallel to the surface of the blende bottom bed. In this way a bottom bed of even thickness is obtained and it may be made of less depth. In Mills 13 and 14 cross partitions are used to prevent the crawling of a pyrite bottom bed. In the former there are two on each sieve, ½ inch high; in the latter there are three on each sieve, ¼ inch thick and 1½ inches high. On the fine jigs, Nos. 3, 4 and 5, of Mill 20, two cross partitions are used even where the specific gravity is high.

The bottom bed should not be of too soft mineral, as excessive abrasion will take place, causing loss and requiring frequent renewal. Fortunately, most of the abraded particles of a heavy mineral, like galena, go into the hutch, which largely overcomes the loss. The most unfortunate combination would be where chalcopyrite is used, as this mineral is both soft and of low specific gravity, and its fine abraded particles would be largely lost in the tailings.

As an exception to the statement previously made in regard to the specific gravity of the material of the bottom bed, galena has been replaced by iron shot or iron punchings; for example, iron shot has been successfully employed at Ammeberg as bottom bed material, jigging galena, blende and limestone. It should be noted that iron punchings or shot rust into a solid cake in an idle mill. They should, therefore, be removed when the mill is stopped. Pyrite has likewise been used to replace chalcopyrite or blende, on account of its hardness. Davies reports the use of shot made of an alloy of iron and aluminum which has the advantage that any desired specific gravity may be obtained by mixing the metals in suitable proportion.

As shown in Table 283, lead shot in a thin layer has been used successfully in Mills 20, 26 and 28, either alone or with some coarse ore—in the first case, for jigging pyrite; in the last two, galena. In Mill 20 the bottom bed of the No. 1 jig is but ½ inch thick. Mill 28 used it mixed with ore on fine jigs where the whole bed hardened up badly, probably from barite, obtaining thereby a much freer and more lively whole bed, and when very soft lead ore was being concentrated, lead shot alone gave good results. Mill 26 found it gave a nice, clean screen and prevented blinding, requiring less frequent cleaning of the sieves. In South Africa lead shot are used as bottom beds on jigs for washing diamondiferous earth.

Certain hard, heavy minerals are occasionally available to be used as bottom bed material, for example, magnetite. Feldspar is much used for jigging coal on account of its weight, which is the same as that of the slate, and of the fact that it breaks into elongated and flattish fragments which are considered favorable to jigging. In regard to this, Lamprecht holds that when the grains have become rounded by wear they should be replaced by new feldspar.

Armitage[33] recommends that a strip of screen plate 6 inches wide with larger

holes in it be put in the trommel which feeds a jig, to furnish sufficient coarse material to keep up the bottom bed automatically.

§ 429. THICKNESS OF THE BOTTOM BED.—The thicker the bottom bed, the less freely the concentrates pass through; therefore, the cleaner will be the hutch work. With a thin bottom bed the opposite is true, as is shown by the No. 1 jig of Mill 20 which has a bottom bed only ½ inch thick and makes a small amount of tailings. If the bottom bed is too thick, a portion of what should go to the hutch fails to do so, and may be lost in the tailings. For an ore with a large percentage of concentrates, we need a thin bottom bed; for the reverse, a thick bottom bed. This may be construed as an argument for placing a thicker bottom bed on a later sieve, as is shown in jigs 3, 4, 13 and 14 of Mill 38. An argument may be given for the exact reverse, namely, in order to guarantee that the tailings are completely robbed of values, it may be better to let a little quartz go into the last hutch with the fine concentrates. If so, then the bottom bed on the last sieve will be made thinner. The mill man will have to decide between these two arguments which to follow. If he is trying to keep quartz out of the concentrates, then the former will be the method; if to extract the last possible grain of value from the tailings, then the latter.

Table 283 gives the thicknesses of bottom beds used in the mills. It will be seen, on comparing this with Table 271, that the bottom bed is generally about one-half the height of the tail. A good method is to make the bottom bed of this height and if it proves too thick or too thin, the desired change may be made. On a jig that makes its own bottom bed and has automatic discharges, this is done by running the automatic discharge a little more freely to thin the bottom bed and less freely to thicken it. On jigs which have bottom beds provided, the material may be added or removed, as desired.

In Mills 9 and 10, for the No. 1 jigs, separating blende from limestone, the nearness of the specific gravities of the two minerals would seem to suggest a thick bottom bed, but, on the other hand, the jigs are called upon to treat a large amount of ore with high percentage of concentrates, to jig all sizes together, making finished coarse concentrates and tailings as clean as possible and unfinished hutch work. To accomplish all these, the bottom bed of blende is kept quite thin.

Kunhardt found that in European practice bottom beds varied from 20 to 80 mm. thick and that the top layers were from 30 to 100 mm. thick.

§ 430. THE SIZE OF GRAINS OF THE BOTTOM BED.—This affects the quality of the hutch product more than almost any other factor. If coarse, the bottom bed will have large interstices and will discharge hutch freely; if fine, the reverse will be the case. According to the author's measurements, the particles of ore will freely move down in the interstices of the bottom bed when the diameter of the grains of the latter is 3.5 or more times that of the former (see § 474). We can, therefore, regulate the freedom of discharge as readily by the size of the grains as by the thickness of the bottom bed, or both. These adjustments may be used at the same time. A thinner, finer bottom bed may have the same rate of discharging hutch as a thicker, coarser bottom bed, but the latter will have a thinner top layer which is more advantageous when jigging very fine material.

When the bottom bed is extremely coarse, the interstices will be so large that it does not move during pulsion, and the interstices act like so many tubes, the specific gravity of the grains having no effect upon the operation. Under these conditions the jig simply acts by the law of hindered settling and gangue is prevented from entering the hutch only by the application of sufficient hydraulic water. When, however, the interstices are smaller and the bottom bed rises, becoming liquified (quicksand) during pulsion, then all the gangue is pushed above it, and if the bottom bed is thick enough, or the suction not too great, no gangue can come into the hutch.

Referring to Table 283, we see that in the mill practice, for jigs which have bottom beds put on them, the ratio of the bed material to the feed ranges from 1.06 to 7.8, with an average of 2.9, indicating that the author's figure 3.5 may work a little too freely in the majority of cases. Or, in other words, the process of natural selection has settled upon a figure below that which works with perfect freedom; in fact there are only 8 out of the 33 that are above the author's ratio.

In all this discussion the author uses the maximum diameter of ore and of bottom bed material in calculating his ratios. The finer grains associated with the coarser part of the bottom bed give smaller interstices than if the finer grains were left out; but, on the other hand, the finer grains of the feed pass through to the hutch more freely than the maximum grains. These two errors, therefore, in a measure balance each other and prevent the resulting error from being serious.

Mills 13 and 39 recommend that the bottom bed be of the smallest size that will not go through the sieve. Kunhardt, in giving European practice, states that a bottom bed of 3-mm. stuff will prevent gangue, though it is finer than 1 mm., from passing into the hutch. On jigs which bring their own bottom bed material in the feed, the ratio is 1.0 and these jigs will always be tight, unless the bottom bed is rather thin, the sieve is coarse, the pulsion is increased, or the hutch water is increased.

Removal of Coarse Concentrates.—This may be done in either of the two following ways:

(1) By skimming.

(2) By automatic discharges run continuously or intermittently.

§ 431. (1) Skimming the Sieves.—To do this, the feed sand, the feed water and hutch water are all shut off and the water drawn down till its top is below the level of the sieves. The spigots are then plugged. The top layer of gangue is now skimmed off and laid one side upon either a fixed or movable apron, by a hoe, the handle of which is cut off to about 1 foot long. Instead of a hoe, a bent piece of metal, 6 inches by 8 inches, may be used, and for the bottom bed, wooden skimmers are recommended by Linkenbach, to prevent injury to the sieve. If desired, a middling product is then skimmed off and placed by itself. Then the concentrates are skimmed off and the sieve is cleaned, if necessary. This is done by scraping it with the edge of a spatula 2 inches wide and 10 inches long, of galvanized iron with rounded end, and by slapping it with the flat side. Then a small portion of the concentrates are put back for a bottom bed; the top sand is replaced, the hydraulic water turned on and the feed started, the spigot plugs removed and jigging thus resumed. Sometimes a rough skimming is made quickly without stopping the jig. For example on a 2-sieve jig the first sieve of which had automatic discharge and the second did not, the author has seen some of the coarse concentrates quickly skimmed from the second sieve, when the bottom bed became too thick, and transferred back to the first sieve to be discharged.

Even when no coarse concentrates are made it is frequently necessary to skim the sieves in order to clean them, as the sieves, especially of the finer sizes, become blinded periodically, that is to say, grains of ore become wedged into the meshes, preventing the passage of water or hutch product through them. In jig No. 1 of Mill 20 which has a bottom bed of large shot, the sieves are cleaned by running a copper scraper back and forth while the jig is running, the shot doing the cleaning.

As shown in Table 283 skimming is not used nearly so much in American mills as automatic discharges. In the Freiberg district of Germany in 1892, out of 32 jigs, 26 used skimming, while 6 had automatic discharges.

Skimming has advantages over automatic discharge where there is a small pro-

portion of concentrates, as it would be impossible under these conditions to regulate a continuous discharge. It may do better work than the discharge, because the attendant selects the quality of products desired; and again the sieve is cleaned and the bottom bed carefully readjusted at frequent intervals. The disadvantages are: the amount of labor required if there is a large proportion of concentrates, the time lost, the derangement of the mill work, and finally, the depth of the bottom bed is too variable for the best work, beginning at the smallest allowable thickness and increasing to the maximum.

Skimming is the rule in the native copper mills of Lake Superior, where there are but very few cases of automatic discharge, while it is the exception in all the other mills. In the former, the percentage of concentrates is not large enough, as a rule, for automatic discharges; the bottom beds of copper do not wear out and lose by attrition. The sieves need to be cleaned perhaps more often than with the brittle minerals. In the latter, the percentage of concentrates is, as a rule, much larger, so that continuous discharges may be easily run and the cost of labor and derangement of the mill from stopping to skim, would be very serious.

The jigs which have their coarse concentrates removed by skimming are shown in Table 283. Of them, Mill 21, jig No. 1 is fed with a sized product; Mill 31, jig No. 9, with the first spigot of a classifier. In both cases the hole in the sieve is of about the same size as the maximum grain of concentrates and under these conditions a bottom bed accumulates so slowly that skimming must be used. This avoids the loss by attrition of a bottom bed which is put on and avoids the poor jigging tight-bottom bed, which would result if a fine sieve was used. In Mill 24, jig No. 5 and Mill 30, jig No. 7, both are fed by the second spigot of classifiers. Their sieve holes are much smaller than the maximum quartz grain and yet large enough to slowly accumulate a bottom bed. These are skimmed for the same reasons as the two preceding jigs. In Mill 12, jig No. 4 is the only continuous plunger jig in a mill supplied with movable sieve jigs. It is natural that it should be skimmed, therefore, to keep the method uniform. In Mill 25 the No. 1 jigs are skimmed every two hours to reduce the bottom bed from 4 inches deep to 2 inches deep. All the sieves in mills other than native copper are skimmed occasionally to clean the sieves.

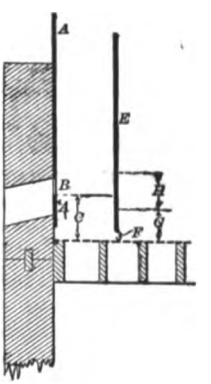

FIG. 334.—GATE AND DAM DISCHARGE.

Considering the native copper mills (44 to 48 inclusive), Mill 44, No. 2 jig has discharge on both sieves; No. 3 on second sieve; No. 6 jig on first two sieves; No. 7 on first sieve; No. 10 on its sieve; No. 12 jig on first and third sieves and No. 13 on the third sieve. In Mills 46 and 48 automatic discharge is used on the second sieves of No. 1 jigs. These discharges are in every case on jigs which run freely enough to run discharges. All the other jigs of the Lake Superior mills are skimmed periodically, as shown in Table 283, in some cases merely to clean the sieve; in others to remove coarse concentrates as well.

Rittinger describes jigs with fixed sieves used in the early days, from which all the products, even the tailings were removed by skimming, as is the case now in hand jigs.

(2) AUTOMATIC DISCHARGES may be divided into two groups:

(*a*) Gate and dam discharges;

(*b*) Other forms.

§ 432. (*a*) GATE AND DAM DISCHARGES—(See Fig. 334.)—These consist of a dam *A*, with an opening *B* at a height *C* above the sieve, running in guides and adjustable as to height, and a gate or enclosure *E* so arranged that coarse concentrates in order to pass out through *B*, must first pass under *E*. The theory of the apparatus is as follows: If *G* is the depth of the coarse concentrates and *H*

of the top layer outside the enclosure, and if C is the depth of coarse concentrates inside, then, owing to the fluidity of the bed, C will balance H and G, just as a shorter column of heavy liquid will balance a longer column of light liquid. For example, suppose quartz, specific gravity 2.6, and galena, specific gravity 7.5, are being jigged, and G and H each equal 2 inches. If a column one square inch in section is considered, the weight of a cubic inch of galena being 0.2700 pound and of quartz 0.0936 pound, then the column G weighs $2\times0.27=0.5400$ pound, and the column H weighs $2\times0.0936=0.1872$ pound, and the column $G+H$ weighs 0.7272 pound. The height of the column C of galena, necessary to balance $G+H$ is $\frac{0.7272}{0.2700}=2.693$ inches. The apparent error in assuming both columns to be solid rock is eliminated by the fact that they are both made up of particles of approximately the same size with the same proportion of interstices.

It is essential that the concentrates in the pen C behind the gate E shall be loosened up and pulsated by the action of the plunger. This prevents the use of too small a pen in which the friction on the sides would hinder the loosening action of the plunger, and also prevents the placing of the dam outside the jig, where the concentrates would not be pulsated at all.

The liquidity of the bottom bed is such that it will approximately find its own level, and if galena comes to the sieve in the feed, the bottom bed G will increase in depth and the galena will rise above the height C and will overflow through B. Owing to this fact, this discharge is approximately automatic; for example, if galena ceases to come in the feed, the depth G decreases until the depth of the galena is equal to the height C and it ceases to overflow B. The condition under which it fails to be automatic is when C has been set low on account of a rush of galena, and it is followed by a cessation of concentrates. Then the top layer of gangue is almost certain to flow out under E into the concentrates.

TABLE 284.—RATIOS OF HEIGHT OF GATE TO THE DIAMETER OF THE MAXIMUM GRAIN OF THE FEED.

Ranges between which the Maximum Grain of Feed Lies.	Number of Sieves Considered.	Lowest Ratio.	Highest Ratio.	Average Ratio.
Mm.				
64 to 32	7	1.11	2.00	1.35
32 to 16	12	1.02	3.17	1.68
16 to 8	39	1.20	5.33	2.43
8 to 4	35	1.33	22.58	5.99
4 to 0	34	0.79	33.87	9.43

It is generally held by mill men that with heavy concentrates like galena or native copper, the liquidity of the bottom bed is so perfect that it matters not whether the discharge is placed on the side, the center, or on the tail end of the jig, the flow of concentrates will be toward the discharge from all parts of the sieve. Where lighter ores, as blende, are concentrated, the concentrates layer G is much less perfect; in fact it is much thicker toward the tail, and in this case a discharge either at the side or center of the jig, works less perfectly than one at the tail.

§ 433. *Height of the Gate.*—The space F, that is the height of the gate, must be just sufficient to allow the particles of coarse concentrates to pass freely beneath the gate. If the height is much increased, there is danger of gangue coming into the concentrates. The ratio which the height of the gate above the sieve bears to the diameter of the maximum grain of feed, differs with the size. This is shown in Table 284, which is a summary of Table 283. In this the jigs have been divided into groups according to the size of the maximum grain of the feed and ranging from coarse to fine.

The lighter the specific gravity of the coarse concentrates the higher the gate should be above the sieve. The reason for this is that as the motor power weakens, the friction must be lessened by increasing the area of the passage. In Mills 16, 22, 24, 30 and 40 the above argument appears to hold, because the gates of the later sieves are higher than those of the earlier on any particular jig. In most of the mills, however, this variation is not found and in them the diminished quantity of material to be discharged on the later sieves is presumably considered to give sufficient relief from friction. In a few instances the author found the height of the gate to be about the same as the diameter of the maximum grain and in one case even less. There probably were spaces where the sieve bellied down, making the hole really larger than the measure obtained.

It is sometimes customary to place the gate at a high level in order to discharge the lighter portions of coarse concentrates which are near the top of the bottom bed, without disturbing the heavier grains below. In Mill 38, jigs No. 13 and 14, with tailboards 3½ inches high, the dams are 2½ inches high and the gates 2 inches above the sieve. This plan effectually prevents the bottom bed of coarse concentrates from rising above 2½ inches high, maintains a good bottom bed of coarse material for suction with very little attention and removes the finer grains of ore and middlings, which would tend to clog the bottom bed. The tail discharge used at Monteponi (see § 439), is a high discharge.

§ 434. *The Height of the Dam C* (see Fig. 334), must be regulated by trial. It must be low enough to keep the layer *G* from flowing over the tail of the jig, and yet not so low as to let gangue pass under the gate *E* into the concentrates. It is customary to adopt some thickness of bottom bed and then run the jig in such a way as to maintain that thickness. To do this, when concentrates form a large proportion of the feed, owing to the friction in passing through *F*, the height *C* must be low to give a free, rapid discharge through *B*. When the proportion is small, *C* must be high to prevent too rapid discharge. The height of the dam also depends to some extent upon the coarseness of the ore; the coarser it is, the less lively is its movement and the lower should the dam be. The necessity for lowering the dam, as the specific gravity of the coarse concentrates becomes higher has been already indicated in § 432.

This not only applies to the jigging of different minerals, for example, galena (specific gravity 7.5) and native copper (specific gravity 8.8), requiring a lower dam than chalcopyrite, or blende (specific gravity 4), but it also holds in regard to the heights of dams of the several sieves in series of a single jig. The later sieves always have coarse concentrates of lighter specific gravity than the earlier, and in consequence their dams will naturally be higher. The quantity of coarse concentrates on the later sieves will generally be less than on the earlier and this too would call for higher dams. On the other hand, lower dams on the later sieves may be desirable for the purpose of making the bottom bed thinner, thereby throwing more fine concentrates into the hutch and helping to complete the removal of values from the tailings. With jigs so run, the later sieves will be making middlings with more or less gangue.

For purpose of comparison, the ratios of height of dam to the height of the tailboard have been computed in Table 283. Referring to this it will be seen that some jigs are ruled by the arguments which call for higher dams on later sieves; others by the arguments for lower dams; and still others have no variation. It will be noticed that the ratios in the table range from 0.14 up to unity. There are only a few below 0.50, and of them those in Mill 38 are known to have a restricted outlet and not to depend entirely upon the height of dam for the regulation of discharge.

Many forms of gate and dam discharge have been designed which may be

divided according to their position into three classes: (*a*) Side discharges, (*b*) tail discharges and (*c*) center discharges.

§ 435. *The Side Discharge* is used in a very large majority of cases. It is placed for convenience against the side of the jig and generally a little nearer the tail than the head. The tail corner has not succeeded, owing to the stagnation of the bottom bed due to friction on the side and on the end of the compartment. Among the various forms of side discharges are the following:

The Captain John Richards discharge, used at Mill 44, has a gate of sheet copper, semi-cylindrical in form with 3-inch radius, flanged and nailed to the side of the jig. Through the plank wall of the jig a hole is bored, sloping inward and upward about 30° to suit a lead pipe, with about ⅝-inch bore and 8 inches long. This pipe fits loosely in the hole and has its inner end within the gate. The discharge is slackened by pushing the pipe inward a little in the sloping hole, thereby raising its inlet to a higher level, and it is hastened by pushing it outward. The stream flows directly into a bucket in the bottom of which is an inch hole covered with 20-mesh wire screen to drain the concentrates as they are caught.

The discharge on the fine jigs of Mill 37 (see Figs. 306*h* and 306*i*), consists of a pen *l* of No. 14 galvanized iron which acts as a gate, and a pipe *m* which acts

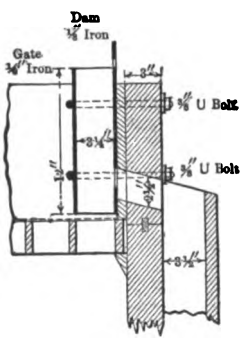

FIG. 335*a*.—END VIEW OF GATE AND DAM DISCHARGE AT MILL 30.

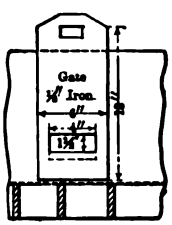

FIG. 335*b*.—SIDE VIEW OF GATE.

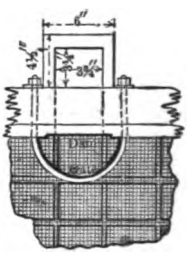

FIG. 335*c*.—PLAN.

as a dam. The total height of the gate is 5¼ inches above the sieve and its lower edge is ⅝ inch above. The dam, as set in the drawing, is 3½ inches above the sieve, but this may need to be adjusted differently for each size and weight of ore. The dam is an inclined iron pipe 1 inch in diameter, sliding in the side wall of the sieve box, the leakage being prevented by passing the pipe through an elliptical hole in $\frac{3}{16}$-inch sheet rubber. It is supported and held in place by a strap *v*, eye-rod *w*, clamp *x* and thumb screw *y*, affording easy adjustment.

The coarse jigs of Mill 37 have a piston which is pushed down in the enclosure by a hand screw, to modify the discharging action, by cutting off part of the opening in the side wall of the jig.

The discharge in Mill 30 (see Figs. 335*a*-335*c*) has a gate or enclosure of plate iron in the form of a semi-cylinder ⅛ inch thick with a radius of 3 inches, and bolted to the side by two ⅝-inch U bolts. The adjustable dam is of ⅛-inch plate iron with a discharge opening 4 inches wide by 1½ inches high cut in it. This can be raised and lowered in guides so as to give any desired height of dam. The center of the discharge is 5 inches from the tail of a sieve 32 inches long. This form is probably more universally adopted than any other. In comparing this discharge with those used on the fine jigs of Mills 37 and 44 we note that the

former changes suddenly from no discharge to a discharge over a dam 4 inches wide, while the latter change to a discharge through part or the whole of the area of a moderately small pipe. The latter are much more restricted openings and will not draw down the concentrates so fast as the former. They are, therefore, less liable to draw over the gangue into the concentrates than is the wide gate of Mill 30.

The Baum coal jig has the gate and the dam suspended from the opposite arms of a rocking lever, so that as the lever is moved by a third arm, the gate goes up as the dam goes down, and *vice versa* (see Fig. 314).

The Heberle discharge (see Fig. 336), is like that of Mill 30 except that the

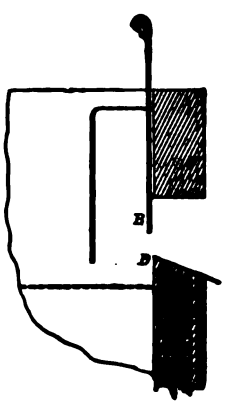

FIG. 336.—HEBERLE DISCHARGE.

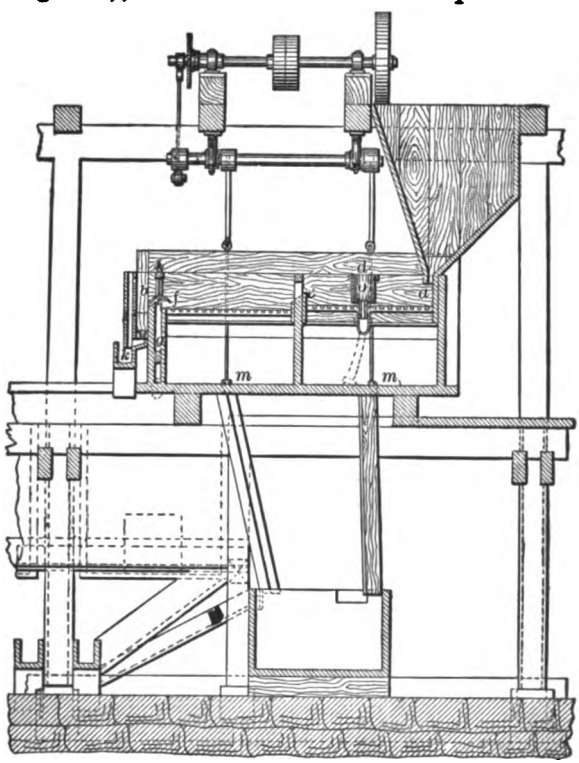

FIG. 337.—LONGITUDINAL SECTION OF JIG AT CLAUSTHAL.

dam *D* is of constant height, made in wood and a plate iron piece *B* shuts down upon it to limit or cut off the discharge.

In regard to the enclosure which is necessary in the preceding forms, it subtracts just so much surface from that doing active jigging work and it impedes the carrying current which conveys the gangue from the head toward the tail of the jig; it should, therefore, be made as small as possible and still work freely. The adjustment of the dam should be simple, as the whole control of the bottom bed depends upon its regulation.

§ 436. *Tail Discharges.*—The forms just described under side discharge, can be easily applied to the tail of the sieve on a one-sieve jig or a Collom jig, or to

the last sieve on a jig with several compartments. The advantage of this position is that it is the place on the sieve where the bottom bed of heavy concentrates will be the deepest. The construction of the enclosure will need to be built up above the tailboard at the back, to prevent tailings from mixing with the heads. For the earlier sieves of multi-sieve jigs this arrangement complicates the construction and is not commonly used. The author found it, however, in Mill 31. As used at Mill 44 on the No. 6 and No. 7 jigs, the gate or enclosure is placed in the middle of the tailboard. The dam is a pipe brought in through the tailboard, which has a prolongation of rubber tube. The end of this tube may be elevated or depressed by a thumb-nut and screw, for retarding or hastening the discharge of concentrates. The reason for using a tail discharge on these jigs, instead of a side discharge, is because the bottom bed is not quite so soft as that of the jigs using the Captain John Richards discharge.

As used in Mill 39 on No. 1 and No. 2 jigs, the enclosure is in the form of a V, 5 inches wide and 6½ inches long.

Tail discharges proper extend across the sieve and draw off concentrates from the whole width. At Clausthal a tail discharge is used on the jigs for sizes ranging from 17.78 mm. down to 2.37 mm. This discharges concentrates through a slot running the whole width of the sieve, under the edge of a gate, and they are lifted over a dam by the pulsion into a discharge launder. The gate is adjustable up and down by thumb-screws and is of curved form to allow the tailings to pass over it (see Fig. 337). This practice was adopted in the European mills in the seventies. It has a capacity for discharging continuously a large proportion of concentrates and if required to discharge small quantities, the tailboard may have spaced holes, instead of a continuous slit, or it may be run intermittently. This discharge requires a drop of at least 2½ inches between the sieves, to prevent the water and sand of No. 2 sieve from splashing back into the concentrates of No. 1.

An ingenious method of cutting down the amount of opening is shown in Figs. 338*a* and 338*b*, the Osterspey discharge. Here what is practically a set of tri-

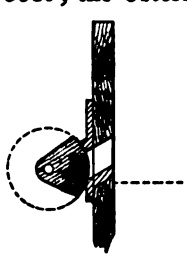

FIG. 338*a*.—SECTION OF OSTERSPEY DISCHARGE.

FIG. 338*b*.—REGULATOR FOR OSTERSPEY DISCHARGE.

angular holes is made to be raised or lowered in front of the discharge slit, thereby giving any amount of opening desired.

§ 437. *Center Discharges,* sometimes called bell discharges (see Fig. 337). These have circular enclosures or gates placed centrally, nearer the tail than the head. In the middle of the enclosure a pipe passes down through the sieve and out at one side of the jig tank, and carries off the concentrates. The extension upward of this pipe above the sieve is adjustable as to its height and it serves as a dam. The changing of sieve frames from time to time makes the connection with the central pipe troublesome. This was tried in some of the mills at Lake Superior between 1866 and 1872 and given up. As used at Przibram, the gate

is 10 inches high and 6 inches in diameter; the pipe dam is $1\frac{1}{2}$ to $2\frac{1}{2}$ inches in diameter.

§ 438. (*b*) Other Forms of Discharges than Gate and Dam.—These are not so commonly used and a description of two types only will be given.

The Captain Harris Atmospheric Discharge.—This discharge is used in Mills 44 and 46 for taking off coarse concentrates, which are in this case middlings, from the whole width of the tail of the coarse jigs which treat stuff $\frac{3}{16}$ inch (4.76 mm.) in diameter. It is used in Mill 44 on both sieves of No. 2 jig, on the second sieve of No. 3 jig, on jig No. 10, on the first and third sieves of No. 12 jig and on the third sieves of No. 13 and No. 14 jigs; in Mill 46 on the second sieve of No. 1 jig.

As shown in Fig. 339, it consists of an enclosure *A* with an air-tight top, sides and ends, 2 inches wide and not quite reaching the sieve to allow the passage of concentrates. It is made of $\frac{1}{8}$-inch steel plate bent at right angles and screwed to the tail cleat. At the top in the center is a $\frac{3}{4}$-inch pipe *B*, 10 inches high,

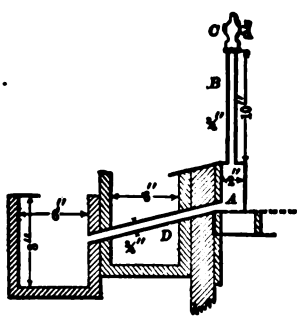

FIG. 339.—ATMOSPHERIC DISCHARGE.

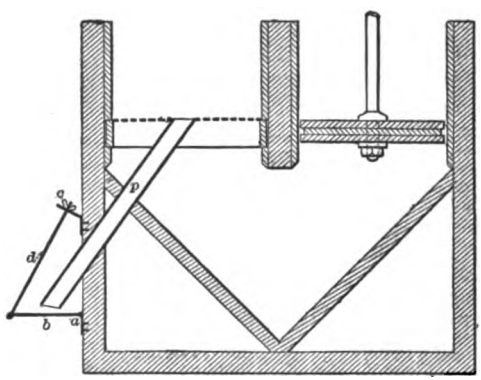

FIG. 340.—PIPE DISCHARGE IN MILL 28.

with a little cock *C* which can be opened for passage of air, or closed. At the level of the sieve is a $\frac{3}{4}$-inch pipe *D* through which the concentrates flow. When the cock is closed, no concentrates discharge; when it is wide open the concentrates discharge very rapidly; by regulating the air cock the quantity of concentrates is regulated.

Pipe Discharge.—In Mill 28 on jigs No. 3 to No. 8 inclusive, the coarse concentrates are discharged from the center of the sieve through a $2\frac{1}{2}$-inch pipe *P* (see Fig. 340), sloping 55°, the upper end of which is flush with the sieve. This pipe passes out through the wall of the jig. The flow of the concentrates is regulated by a check-plate *b*, hinged at *a*, which is held up by a rod *d* and thumb-nut *c*. When the plate is lowered the concentrates flow more freely, when raised, less so. It can be screwed up to a point where it shuts off both concentrates and water. The man who tends the jig judges by the depth of coarse concentrates on the sieve whether to run the discharge faster or slower. This is one of the simplest forms of discharge and one which is available for all but the coarsest jigging sizes.

Kunhardt found this discharge used abroad, with the lower end partially closed by a sliding gate or nozzle of given diameter. In using this form of discharge Linkenbach recommends that for material over 13 mm. the diameter of the pipe should be three times the size of the stuff discharged, and for small stuff, four times.

§ 439. Double Discharges are sometimes used upon a sieve in the effort to

accomplish upon one sieve what is usually done upon two sieves in series. The capacity, however, is diminished or, if not, the quality of the work suffers.

In Mill 17 No. 1 jig, on the first sieve, makes galena by a gate and dam discharge; on the second sieve, it makes blende, etc., by a low gate and dam discharge, and quartz-blende middlings by a high gate and dam discharge, while the tailings are clean enough to throw away. The galena gate and dam are ¾ and 2 inches high respectively. The blende gate and dam are ¾ and 2 inches high respectively. The quartz-blende middlings gate and dam are 2 and 2½ inches high respectively.

The following notes are given of European practice about 1870: (1) Braun's jig at Perm works[56] used two tail discharges, one above the other. (2) At Bleyberg[47], two discharges were used on one sieve; one was a center discharge, the other was a tail gate and dam. (3) At Angleur and at Rocheux[47], two-compartment jigs, were used, each with two tail discharges one above the other, and yielded on first sieve, galena in the lower discharge and galena and pyrite in the upper; on the second sieve, pyrite in the lower and pyrite and blende in the upper. The tailings were waste. The two mixed products were returned to the jig. (4) At Welkenraedt[47], a three-sieve jig had center discharge on all the sieves and tail discharge on the first two. It yielded on the first sieve in the center discharge, galena; in the tail discharge, galena with pyrite and blende, which was re-crushed; on the second sieve in the center discharge, pyrite with a little blende and galena, which was re-crushed; in the tail discharge, blende with pyrite, which was returned to the jig; on the third sieve in the center discharge, blende, and overflow which was waste.

A one-sieve jig, called Ferraris Intermediate Jig (see Fig. 330), used at Monteponi for blende and galena, has a sieve 400 mm. wide and 1,200 mm. long, and at 950 mm. from the head end the tailings are taken out by a central vertical pipe *a;* at the tail end are two gate and dam discharges *dd* with circular openings 60 mm. in diameter. These may both be run together, making the same quality of blende, or they may be run to take coarse concentrates from different levels and give two qualities of blende. The gates are kept high enough so that the galena is allowed to remain on the sieve till sufficiently concentrated and is skimmed off once a day.

§ 440. Intermittent Automatic Discharge.—It is possible, when the proportion of coarse concentrates is not large enough to run the various forms of automatic discharges continuously, to run them intermittently instead of resorting to skimming. This is the case on the second and third sieves of No. 4 jig in Mill 22, on the second sieve of No. 4 jig in Mill 24, and on the first, second and fourth sieves of No. 4 jig in Mill 33. Kunhardt states that this intermittent method is often applied to a pipe discharge, to prevent a serious waste of water, where grains in the concentrates are large. The jig is run until the coarse concentrates have nearly reached the top of the tail. They are then drawn down by opening the discharge pipe until tailings begin to appear. Then the discharge is closed and the operation repeated. He does not recommend it, however.

In comparing skimming with intermittent discharge, the latter has the advantage that it does not necessitate the stopping of the jigging, and it costs less labor. The former has the advantage in the oft-repeated readjustment of the sieve and in the better selection or quality of the concentrates. Both have in common the following disadvantages: Danger of concentrates getting into the tailings; danger of gangue getting into the heads; increased loss by attrition; less perfect jigging, due to varying depth of bottom bed.

§ 441. Stay Boxes for Automatic Discharges (see Figs. 341*a* and 341*b*), are small water-tight compartments with hopper-shaped bottoms, communicating

with the delivery of the automatic discharge. Into this compartment the coarse concentrates can move without the passage of any water. In fact, as they move in they displace a certain amount of water which passes back on the sieve. After the concentrates have sufficiently accumulated they may be drawn off through a

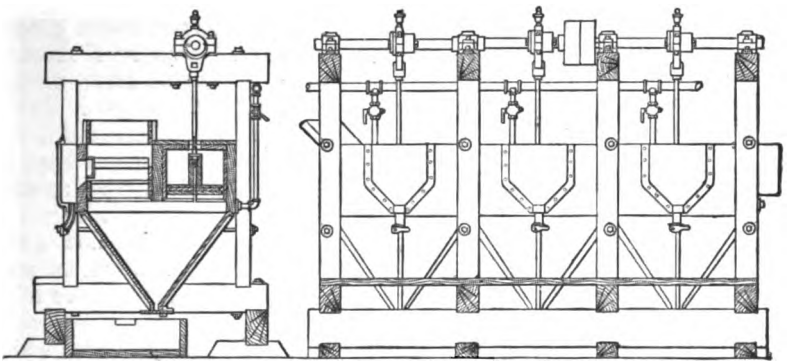

FIG. 341*a*.—END SECTION OF JIG WITH STAY BOX. FIG. 341*b*.—SIDE ELEVATION.

gate below and the operation repeated. They save water and guard against too great a flow of ore. Kunhardt found them employed only on jigs treating stuff larger in diameter than ⅜ inch. In Mill 28, jigs No. 1 and 2, treating stuff above 16 mm., both have stay boxes which are 10 inches wide, 22 inches long and 37 inches deep, with a nipple at the bottom closed by an inside plug which may

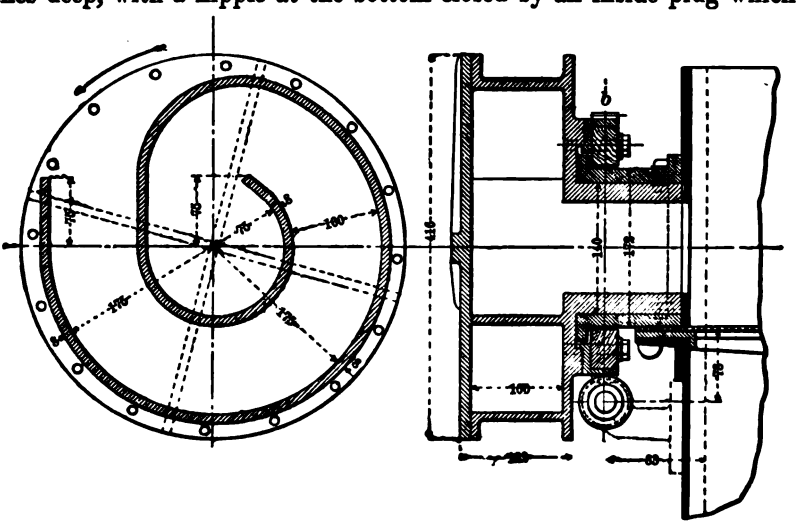

FIG. 342*a*.—LONGITUDINAL SECTION OF THE FERRARIS STAY BOX. FIG. 342*b*.—CROSS SECTION.
(Dimensions in millimeters.)

be lifted by a wire to discharge them. Mill 27 also uses stay boxes on the coarser jigs.

Ferraris uses at Monteponi a stay box which holds back the rush of water, but draws off the ore from the discharge continuously (see Figs. 342*a* and 342*b*). In construction and mode of running, it is similar to the Frenier spiral sand pump (see § 631), run backward. The concentrates are free to enter the cen-

tral part of this spiral, but they can only pass on as the spiral slowly revolves, giving increased cubic contents for their reception. The total capacity of the spiral is 1 to 1½ liters per revolution, and the speed may be varied from 1.7 to 14 revolutions per minute. The dimensions given on the figures are in millimeters.

DISCHARGES WITH UNWATERING SIEVES.—The discharged coarse concentrates are sometimes unwatered by passing over an inclined screen of smaller mesh than that used in the jig. At Clausthal the sieve for grains 17.78 mm. to 4.22 mm. diameter slopes 33°; for the several smaller sizes the slope is 45°. They yield concentrates to a box and water which is returned to the mill.

DISCHARGES INTO THE HUTCH.—In some coal jigs it frequently happens that the coarse concentrates and hutch product are both collected together in the hutch, both being waste products. The Sheppard jig is an example of this.

§ 442. DISPOSAL OF CONCENTRATES.—When the concentrates flow automatically from the jig, they may be handled in several ways as follows, of which the first four are where the products are finished, and the last four where additional treatment is needed:

(1) The product of each jig may be unwatered separately in boxes which send their overflows to a settling tank, while the concentrates are shoveled to a barrow or a car. This arrangement is well illustrated in the Lake Superior copper mills (44, 45, 46, 47 and 48), where the hutch products of a pair of finishing jigs go to a compartmented tank or "copper boxes." The tank used in Mill 48 has seven compartments, as shown in Fig. 343. Assuming for a specific example that this is treating the hutches of No. 1 and No. 2 finisher jigs, then the first, second and third sieves of No. 1 finisher go to boxes 1, 2 and 3 respectively, and in the same way, those of No. 2 go to boxes 4, 5 and 6 respectively. The boxes overflow one to another as indicated by the arrows, everything finally coming to box 7. The overflow of box 7 goes to a long, horizontal launder or settling tank, which in turn overflows into the main tailings launder. For the quality of these products the reader is referred to the mill scheme in Chapter XX. The No. 3 and No. 4 finishing jig hutches are handled in like manner, but yield a different quality of products. The copper boxes of Mills 44, 45 and 46 are very similar to those of Mill 48. In general, the richer box overflows into the poorer, although this is not a universal rule. In Mill 47, four more compartments are added for settling the overflow and the long settling tank is dispensed with. In Mill 47 the depth at the upper margin of the copper boxes is 14 inches, at the lower margin 18 inches. The cover jig of Mill 47 delivers its hutch into a box 2 feet long, 1 foot wide and 3 feet deep. This method is not uncommon in other mills than those of Lake Superior. For example, it is used in Mills 15, 30, 70, 85 and 87.

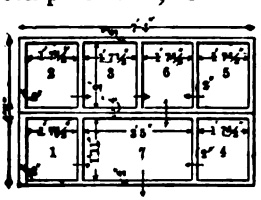

FIG. 343.—"COPPER BOXES" OF MILL 48.

(2) The concentrates may be unwatered in boxes with a fine filter screen in the bottom, a gate for sluicing out the settled ore and a car for transporting it. Mill 28 has a special story in the mill beneath the jigs for these boxes and each sieve of each jig, from No. 3 to No. 8, has its own box. These boxes are built as two long compartmented tanks side by side, each 50 feet long. There are twelve boxes or compartments in each tank and each box is 4 feet 6 inches deep, 2 feet 8 inches wide and about 4 feet long. The bottoms of the boxes slope toward the discharge gate and the latter has a spout or chute for convenient delivery into the car. The screens are of wire cloth and are placed in the side near the lowest point where the wear will be least, and the water with the small amount of ore which passes through is carried to the No. 1 settling tank. The

earlier and later jigs have no under story; their concentrates are treated by the first method. Mill 27 and some others, dispose of the concentrates of a portion of the jigs by this method. The Lake Superior native copper mills use this scheme in a very simple way for the coarse concentrates which go into little buckets with a hole about 1 inch in diameter in the bottom covered with a fine screen. When the bucket is full, in most cases it is carried by boys to the shipping car or barrels or in the case of Mill 44, the boys dump it into a special jerking conveyor which delivers it to the shipping car. The drainings of the buckets are saved in a settling tank.

(3) All the jig concentrates are run together into a large system of settling tanks. In general, these consist of a set of large settling boxes with or without filter screens, with gates, chutes and cars for ease of draining, discharging and shipping the products, and of very large settling tanks, for settling the fine overflows. Mills 38 and 42 are instances of this method (see § 349).

(4) All the jig concentrates are run into one of a set of very deep tanks. These tanks are in different stages of a cycle of operations; one will be receiving concentrates; a second is draining and a third is being emptied. Mills 30, 31, 32, 34, 35 and 40 are instances of this method (see § 349).

(5) The concentrates are sent by launders to a trunking table or trunking machine, where by a hand hoe or by mechanical device the little remaining gangue is taken out, leaving pure concentrates for the smelter and middlings returned for further treatment. Mills 22, 25, and the Desloge mill in Missouri all use this method.

(6) Certain fine jig products are made on jigs which have bottom beds with large interstices and free suction, and as a result, contain too much gangue. Their hutch products are fed to jigs that are run slower, with smaller interstices, and yield finished products. Examples of this are: Mills 9, 10, 22, 38, 42, 43, 44, 45, 46, 47, 48 and 86.

(7) Certain very fine jigs yield hutch products with too much gangue. This is removed by kieves. Mills 46 and 47 are instances.

(8) Jigs making middling products containing concentrates attached to gangue and, therefore, requiring re-crushing, send these products to some crushing machine, as rolls, Huntington mill, Bryan mill or gravity stamps. This treatment of re-crushing middlings exists in nearly all the mills.

§ 443. Removal of Tailings.—The usual American practice is to allow the tailings to overflow the tailboard of the jig, the water washing them away in a launder. At Monteponi, Sardinia, Ferraris uses a vertical pipe *a* extending up through the whole bed near the tail, for taking off the tailings from his intermediate jig (see Fig. 330).

Sometimes it may be desirable to unwater the tailings; for example, first, where the sand is unfinished, requiring further jigging or further crushing; second, where there is fine stuff of value in the jig tailings which can be separated by a hydraulic classifier attached to the tail of the jig, the overflow being sent for further treatment, the spigot being waste[15]; and third, where economy of water is to be practised. This last is sometimes the purpose in European mills, but in this country labor as well as water would need to be economized. To this end, it will generally be cheaper to have the water carry the sand to the tailings pond and then it can be pumped back to the mill.

There are several methods of obtaining practically dry tailings, among which are the following:

(1) Unwatering is done by a steeply inclined sieve, the tailings passing over and the water passing through the sieve. In Mill 27 (see Fig. 344), a screen of the width of the jig, sloping 45°, and 16-mesh with No. 22 wire (0.0345 inch diameter of hole) is used on the tailings of No. 6 and No. 7 jigs. At the lower

end of the sieve is a little cross dam 1 inch high to prevent the water from passing down with the sand. The sand is discharged to the hopper of a Hendy Challenge feeder and sent to stamps, while the water goes to waste. The tailings of No. 1 jig in Mill 86 (through 9 on 6½ mm.) pass over a 10-mesh steel wire inclined screen which is the same width as the jig sieve and slopes 40°. The water is settled in a settling tank and then runs back to the mill tank. The tailings are still wet enough to slide in the trough to the Huntington mill. For the tailings of No. 2 jig (6½ to 3 mm.) the arrangement is similar, except that the screen is 16 mesh. A similar arrangement is used in another Colorado mill. Coal is not infrequently unwatered by passing it over a sieve, as it leaves the jig. It was used in Germany as far back as the days of Rittinger.

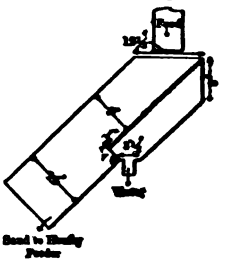

FIG 344.—UNWATERING SCREEN IN MILL 27.

(2) Unwatering boxes, fastened to the tail of the jig are used for removing a part of the water as overflow to be used on other machines, while the remaining water carries forward the sand. In Mill 44 unwatering boxes are put in between the second and third sieves of the finishing jigs (Collom jigs). In Mill 48 they are 18 inches long by 24 inches wide and are put in between the first and second, as well as between the second and third sieves of the finishing jigs (Collom jigs); the settled sand goes by two little spigots to the next sieve and the overflow water, after settling out its fine slimes for slime tables, is sent to waste.

(3) The disposal of tailings by jigging with a stay box has already been described (see § 424).

(4) The tailings of many jigs go to unwatering boxes located at a distance from the jig. They are treated under that head (see § 340).

(5) A mechanical device is used on the Luhrig jig. It consists of an endless chain scraper which carries the coal from the tail up an inclined plane. This saves the large quantity of water which would be required to carry so coarse a product over the tail, so that no water is removed except that adhering to the coal.

(6) Kunhardt mentions a revolving paddle wheel or a shovel at the end of an oscillating lever as simple devices commonly employed in Europe for sweeping the tailings over a concavely round tail.

(7) A coal jig described by M. Evrard[73], as used in France, has a movable frame above the sieve with a number of blades running crosswise of the jig. By the use of two cams, one giving horizontal motion and the other vertical, the blades are made to push the surface coal toward the tail of the jig, then to rise and return toward the head and finally descend to the coal to give it another push. This cycle is repeated constantly and by it the capacity of the jig is increased and the carrying current done away with.

(8) The tailings of jigs at Przibram flow over the tail into a shallow compartment in the side of which is a sieve, through which the water passes into a second compartment. The tailings are conveyed from the first compartment up a trough, inclined 25°, by an Archimedean screw conveyor. The water is elevated from the second compartment 8 to 12 inches by a little propeller at the rate of 3.4 to 6 cubic feet per minute and returns to the hutches. An arrangement similar to this occurs quite frequently in coal jigs where the coal and water passing over the tail fall into a compartment from which the coal is removed by a conveyor while the water passes through valves into the hutch of the jig again.

§ 444. THE NUMBER OF SIEVE COMPARTMENTS required in a jig. In general this will depend upon three things: (1) the purpose for which the jig is used; (2) the capacity required of the jig; (3) the ease of separation.

(*1*) *The Purpose.*—It is common to jig very coarse products upon one sieve in order to quickly take out what coarse free concentrates there are and send all the rest to be crushed finer. A next finer size is often treated upon two sieves in the same way. For a third grade, where the mineral is more perfectly unlocked and, therefore, middlings only are re-crushed, a three or four sieve jig is good practice. For the finest sizes of all, where the middlings may be only re-washed or no middlings made, three, four or even five sieves are considered good practice. The last sieve is run as a guard to prevent loss in tailings. For this purpose it is run with a loose bottom bed to take into the hutch all that can be saved. The hutch so saved requires re-treatment and on coarse sizes it will contain included grains, but on fine will generally require only further washing.

Where an intermediary jig is used, as in Mill 24 and in one Colorado mill, to treat the undersize of the last trommel and send its tailings to the first classifier, a one-sieve jig is good practice.

Where rough, quick work is required, as in Mill 13 for example, or on iron ore or coal, in order to get rich heads with little regard to the loss in the tailings, a single sieve is used.

The clean-up jigs for the mortar residues of the Lake Superior steam stamps in Mills 44 and 47, and a few finishing jigs, as Mills 44 and 45 on native copper, with small duty, need only one sieve each.

Jigs for testing small batches of ore to ascertain the yield they will give to concentration, are often made with one sieve only.

(*2*) *The capacity* required of a jig will affect the number of sieves needed. Jigs required to do a great deal of work will want more sieves. This loading up, however, may easily be overdone and it is probable that two jigs with three sieves each will do better work than one with six sieves, the quantity of ore treated being the same in both cases.

(*3*) *Ease of Separation.*—This is affected by the coarseness or fineness of the crystalline dissemination of the heavy mineral in the gangue. If the minerals are in large crystals which easily tumble apart when crushed, then fewer sieves will be needed. If they are finely disseminated, tending to the formation of much middlings of all shades of composition, then more sieves will be needed to effect a satisfactory concentration.

It is also affected by the weight of the gangue. If the gangue is heavy as siderite, magnetite, epidote, etc., the jigging becomes more difficult and more sieves will be required than in the case of light gangue.

Again, it is affected by the difference in specific gravity. For example, the separation of galena from quartz is much more easily done and requires fewer sieves than the separation of blende from quartz.

Finally, it is affected by the number of minerals to be separated. For example, a three mineral separation will naturally require more sieves than a two mineral, and a four mineral separation more than a three.

§ 445. *Sieves for Two Mineral Separation.*—The number of sieves used in jigging different sizes in two mineral separation found in the mills is represented in Table 271, and a summary of these figures is given in Table 285.

The practice of the United States, therefore, for Harz jigs, favors one sieve for feed which has a maximum grain lying between 64-32 mm., two sieves for grains 32-16 mm., three sieves for grains 16-8 mm., three, four or five sieves for grains 8-0 mm.

Linkenbach recommends for a two mineral separation, where they separate easily owing to large difference in specific gravity, a two-sieve jig, yielding clean concentrates on the first, middlings on the second, and clean tailings in the overflow.

TABLE 285.—NUMBER OF SIEVES USED IN JIGS FOR TWO MINERAL SEPARATION.

Maximum Size in the Feed Lies Between.	Number of Jigs with				
	1 Sieve.	2 Sieves.	3 Sieves.	4 Sieves.	5 Sieves.
Mm.					
64–32	5	1	0	0	0
32–16	6	6	2	0	0
16–8	3	10	12	8	0
8–4	(a) 2	(a) 14	12	9	0
4–2	(b) 1	(a) 4	19	11	1
2–0	1	(a) 3	(a) 21	3	2
Later spigots of classifiers.	1	(a) 39	15	21	5

(a) These numbers are largely increased by the Collom jigs of Lake Superior and Montana, which are forced to use fewer sieves on account of the large amount of hydraulic water. (b) This is an intermediary jig

§ 446. *Sieves for Three Mineral Separation.*—The jigs in the mills making a three mineral separation have sieves as shown in Table 286.

TABLE 286.—NUMBER OF SIEVES ON JIGS MAKING A THREE MINERAL SEPARATION.

Maximum Size in the Feed Lies Between.	Number of Jigs with					
	1 Sieve.	2 Sieves.	3 Sieves.	4 Sieves.	5 Sieves.	6 Sieves.
Mm.						
16–8	0	1	0	2	(a) 1	0
8–4	0	0	1	3	0	0
4–2	0	0	1	3	0	(a) 1
2–0	0	0	1	5	0	0
Later spigots of classifiers.	0	0	2	6	0	0

The jigs marked (*a*) in Table 286 are typical of a class of mills in Southwest Missouri of which there may be ten or more. The many sieves are used to get high capacity when jigging blende with small difference in specific gravity between the concentrates and the waste. The Cooley jigs used for this work have 5 and 7 sieves on the roughing and finishing jigs, respectively. The only mills the author found making a three mineral separation on jigs are 9, 10, 15, 17, 18 and 19. Although this table is meager in number of jigs, it shows that the separation of three minerals in this country generally calls for from three to six sieves on a jig.

Bellom[52] finds four compartments most commonly used in Europe for three mineral separation, disposing the products as follows: No. 1 sieve yielding pure, heavy mineral; No. 2 sieve yielding heavy and medium minerals mixed; No. 3 sieve yielding pure medium mineral; No. 4 sieve yielding medium and light minerals mixed; tailings are pure light weight mineral. He, however, favors the plan used at Ems, which has only three sieves for three mineral separation, disposing the products as follows: No. 1 sieve yielding pure, heavy mineral; No. 2 sieve yielding heavy and medium minerals mixed; No. 3 sieve yielding medium with a little light mineral; tailings are pure light weight mineral. This, of course, could only be done where the medium mineral was well unlocked.

Linkenbach[15], where hand picking is used for coarser sizes, gives: First sieve, clean heavy mineral; second sieve, pure medium mineral mixed with included grains of heavy and medium, which is hand picked; third sieve, middling product which is re-crushed; tailings, which are clean gangue.

At the Vaucron mill[74] in France, 5-sieve jigs are used, which yield: First sieve, pure galena; second sieve, mixed galena and blende; third sieve, blende; fourth sieve, blende; fifth sieve, mixed blende and waste; tailings, clean waste.

§ 447. *Four Mineral Separation.*—At Diepenlinchen[47] a six-sieve jig was tried and it yielded: First sieve, galena with 80% lead; second sieve, galena with 72% lead; third sieve, mixed galena, pyrite and blende; fourth sieve, blende

with 52% zinc; fifth sieve, blende with 45% zinc; sixth sieve, mixture of blende and gangue; tailings, gangue. The ore was found to contain but little pyrite and the jig was found to have too many sieves and the above was abandoned in favor of a four-sieve jig, which yielded: First sieve, galena; second sieve, mixed galena, pyrite and blende; third sieve, blende; fourth sieve, mixed blende and gangue; tailings, gangue.

In a mill designed by Fried. Krupp Grusonwerk for British Columbia[114], five-sieve jigs are recommended, yielding products as follows: First sieve, clean galena; second sieve, galena and pyrite; third sieve, clean pyrite; fourth sieve, poor pyrite; fifth sieve, clean blende (and barite if present); tailings, clean gangue.

§ 448. WIDTH OF JIG SIEVES.—The width of sieves together with the length, as used in the mills is given in Table 271. A summary of these dimensions with averages, is given in Table 287. The summary does not include the Collom jigs which are used in the Lake Superior and some of the Montana mills, as all have practically the same dimensions and, therefore, would unduly affect the averages in the summary.

TABLE 287.—SUMMARY OF LENGTHS AND WIDTHS OF JIG SIEVES IN THE MILLS EXCEPT COLLOM JIGS.

Maximum Grain of Feed Lies between these Diameters.	Number of Jigs Considered.	Length.			Width.		
		Maximum.	Minimum.	Average.	Maximum.	Minimum.	Average.
Jigs in which the maximum size fed is known.							
Mm.		Inches.	Inches.	Inches.	Inches.	Inches.	Inches.
64–32	5	48	28	35.9	24	16.5	20.8
32–16	11	46	26	36.0	24	16	19.4
16–8	38	40	24	31.8	24	15	18.3
8–4	38	38.75	22	31.7	24	15	18.3
4–2	35	38.75	22	32.0	24	14	18.2
2–1	13	36	22	31.4	24	13	18.2
1–0	4	32.5	22	29.1	16	15.5	15.8
Jigs in which the maximum size fed is unknown, being fed by later spigots of classifiers. The size given is that fed to the classifier.							
16–8	3	34.5	34.5	34.5	22.5	22.5	22.5
8–4	4	36	31	32.3	24	15	17.3
4–2	36	38.75	22.5	32.7	24	12	17.8
2–1	12	36	22	30.3	24	14	17.4
1–0	2	30	27	28.5	21.5	16	18.8

As is shown in § 454, the wider the sieve the greater its capacity and it would, therefore, seem advisable to make all jigs as wide as possible as long as no difficulties of construction in consequence are encountered. The summary, however, shows that there is a regular decrease in width from coarse to fine. The reason for this is that the finer the grains the more necessary it is that pulsion be distributed evenly over the whole width of the sieve, a thing which offers less difficulty the narrower the sieve. It is true that this difficulty may be at least partially overcome by increasing the depth of the longitudinal partition, but this soon reaches a limit, owing to the increased height of the jig demanded.

The jigs of the blende mills of Southwest Missouri are noteworthy as being even larger than any shown in the tables. Among them, the Henry Faust type has sieves 30 inches wide and 42 inches long, while the Cooley type has sieves 36 inches wide and 48 inches long. They are treating coarse material and are reported to do excellent work, which is obtained by very deep hutches and deep longitudinal partitions.

The limit of width given by Rittinger is 18 inches for a side plunger jig, except where graded partitions are used below the sieves. Kunhardt limits the

widths of side plunger jigs to 550 mm. (22 inches), for coarse, and 450 mm. (18 inches), for fine jigging.

Although it is true that an average of all the jigs in the mills shows a decrease in width from coarse to fine, it is not true that this decrease occurs in each individual mill. In some it does, but others have a uniform width throughout, while still others are irregular. As shown in Table 288, out of 34 mills there are 14 mills that decrease, but there are 20 mills (of which 7 use Collom jigs), that prefer to have uniformity throughout the mill.

TABLE 288.—SHOWING THE PRACTICE IN THE MILLS IN REGARD TO THE VARIATION OF WIDTH WITH VARIATION OF SIZE OF GRAIN.

Narrower jigs used on finer sizes—Mills No. 9, 15, 16, 17, 22, 23, 25, 27, 31, 32, 34, 43, 88, 92—14 mills.
Uniform width throughout—Mills No. 10, 13 (a), 14, 18, 20, 26, 28, 29, 33, 35, 36, 40, 42 (a), 44 (a), 45 (a), 46 (a), 47 (a), 48 (a), 85, 86—20 mills.
Irregular width—Mills No. 21, 24, 30, 37, 38, 39, 41, 87—8 mills.

(a) These are Collom jigs.

§ 449. LENGTH OF SIEVES.—In regard to the lengths of the sieves as given in the summary in Table 287, there is a decrease from coarse to fine. This is not, as in the case of width, due to difficulty of getting even distribution of pulsion. It may be to keep the proportion of length to width constant, and to do this as the width is diminished the length must be also.

There are two reasons for limiting the length of a single sieve, that is, for using two or more short sieves in place of one long one, which are of as much importance for coarse as for fine grains. First, the change in the whole bed, due to the separation of a part of the concentrates, calls for changed conditions of pulsion, suction and hydraulic water. This is done by ending up the sieve and passing the material over the tail board to a new sieve. A further reason for limit of length is in the crawling forward of the bottom bed. When it is of medium weight, it is always thinner at the head of the sieve and thicker at the tail, tending to waste ore over the tail. A shorter sieve will have less difficulty in this way than a longer sieve. A series of sieves will give a chance for collecting, later, the ore grains which chanced to go over the tails of the earlier sieves.

The effect of length on capacity is to increase it within certain limits, as will be discussed later under that head (see § 454).

The practice in regard to variation of the length with the variation of size of grain in the individual mills, is shown in Table 289. Thus, from Table 289, it appears that in forty-two mills, eighteen, of which 6 use Collom jigs, have

TABLE 289.—SHOWING THE PRACTICE IN THE MILLS IN REGARD TO THE VARIATION OF THE LENGTH WITH THE VARIATION OF SIZE OF GRAIN.

Lengths uniform throughout—Mills No. 9, 10, 14, 18, 20, 29, 33, 35, 36, 40, 42 (a), 44 (a), 45 (a), 46 (a), 47 (a), 48 (a), 85, 86—18 mills.
Shorter jigs used on finer sizes—Mills No. 13 (a), 15, 23, 25, 26, 27, 28, 31, 34, 43, 92—11 mills.
Irregular—Mills No. 16, 17, 21, 22, 24, 30, 32, 37, 38, 39, 41, 87, 88—13 Mills.

(a) These are mills with Collom jigs.

uniform length for all their sieves; eleven, of which 1 uses Collom jigs, use shorter sieves for fine than for coarse stuff; and thirteen are irregular in this matter.

Rittinger limits the length of jig sieves at 36 inches for coarse stuff and 24 inches for fine. Kunhardt gives 900 mm. (36 inches) for coarse and 700 mm. (28 inches) for fine. The maximum length found by the author was 48 inches on coarse jigs.

§ 450. NUMBER OF STROKES.—In general, the greater the number of strokes, the greater will be the capacity of the jig, but a certain time is needed for de-

veloping the full effect of the stroke, and this limits the speed. The time needed is less for a short stroke than for a long one and, consequently, the jigs with short strokes use a larger number of strokes per minute. In fact the speed may be said to depend upon the length of the stroke, and the considerations which affect the latter indirectly affect the former. For a further analysis of the stroke, see § 478.

Referring to Table 283, practice seems to divide the mills into three groups. First, those which increase the speed rate from the coarse jigs toward the fine, but have moderate speed throughout. There are twenty-four of these, including Mills 9, 10, 15, 16, 17, 24, 25, 27, 28, 30, 31, 32, 33, 34, 35, 38, 39, 40, 41, 43, 86, 87, 88 and 92. Second, those which increase speed toward the fine jigs, but use high speed throughout; there are three mills in this group (20, 26 and 29). Third, those which use practically a uniform speed throughout; there are nine mills in this group (13, 14, 18, 21, 22, 44, 46, 47, 48). It will be seen that by far the larger number of mills belong to the first class, which agrees with European practice, as shown in Table 291, and also with the principles laid down at the beginning of this section. Two out of the three in the second class use lead shot on the sieves. Five out of the nine in the third class use Collom jigs. The Anchor mill at Park City, Utah, formerly used 400 pulsions per minute of $\frac{3}{8}$ inch each on the 4-mesh sand, and 544 of $\frac{1}{8}$ inch each on the finest sizes. These are the fastest speeds found by the author.

It is customary to decide upon the speed of a jig when the mill is designed. It is important, therefore, to decide upon the best rate of pulsations. Table 290 gives a summary taken from Table 283, showing the average number of pulsations per minute as well as the ranges for the different sizes ranging from coarse to fine for all except the Collom jigs. The averages appear to the author to be well suited for adoption.

Table 291 has been prepared to show the foreign practice as recommended by authorities or found in the mills. It shows that in the majority of cases the rates are below the average rates found by the author, especially on the finer jigs.

The speeds used in the Collom jigs are given in Table 292. The pulsions of the Collom jig are slower than those of the others, because the mechanism requires longer time to get through its cycle of action. There is no range of speeds in the individual mills, probably because there is not sufficient range of

TABLE 290.—SUMMARY OF THE NUMBER OF STROKES OF JIGS FROM TABLE 283, FOR DIFFERENT SIZES OF FEED ON ALL EXCEPT COLLOM JIGS.

Maximum grain of feed lies between these Diameters.	Number of Jigs Considered.	Number of Strokes per Minute.		
		Lowest.	Highest.	Average.
Jigs in which the maximum size fed is known.				
Mm.				
64–32	6	95	175	129
32–16	12	100	175	131
16–8	38	80	250	144
8–4	30	115	268	176
4–2	31	130	350	235
2–1	14	135	400	250
1–0	3	210	384	261
Jigs in which the maximum size fed is unknown, being fed by later spigots of classifiers. The size given is that fed to the classifier.				
16–8	3	120	160	147
8–4	4	180	210	197
4–2	35	140	400	237
2–1	12	141	315	213
1–0	2	250	400	325

sizes, but by comparing Mill 13 with the others it is clear that the Collom jigs in that mill must be run slowly because they treat coarse material.

§ 451. LENGTH OF STROKE, OR THE AMOUNT OF THROW.—The throw is adjusted according to some arbitrary rule when the jigs are set up. The manager varies the throw from time to time until the jigs are doing their best work.

TABLE 291.—LENGTH AND NUMBER OF STROKES USED IN FOREIGN PRACTICE.

Authority.	Size of Grain Fed.	Number of Strokes per Minute.	Length of Stroke.	Authority.	Size of Grain Fed.	Number of Strokes per Minute.	Length of Stroke.
	Mm.		Mm.		Mm.		Mm.
Rittinger[17] (*setzpumpe*)	6-2	80-120	33-20	Vezin (*a*) (Mechernich)	14	80	51
	30-20	110-120	75		1.25	240	6
Linkenbach[15]	13-8	110-120	50	Lidner[39] (Sala)	4	150	34-30
	5-3	130	35		1	250	Less.
	1½-¼	150-180	20-12	Blömeke[59] (*b*)	½-0	160-300	.....
Kunhardt[18]	51	75	135	Blömeke[61] (Lintorf)	54-45	80	135
	1-0.35	185	7½		15-11	105	33
	45-30	100-110	100-80		4-3	160	9
Commans[117]	13-8	110-120	50-40	Koch[62] (Gottesgabe Mill)	30-25	65	90
	1½-¼	150-200	15-10		11-8	95	50
Clark[36] (Przibram, 1880)	28	140	65		¾-0	220	3
	2	160-190	2.6-8	Koch[62] (Hammerwasche Mill)	12-8	110	58
Henry[67] (Przibram, 1871)	22-16	120	52		2-1½	180-200	12-8
	9-6	160	40		½-0	200-280	2-1½
	3-0	200	6.6-4.4	Mouchet[74] (Vaucron Mill)	5.5-4	150	30
Randolph[34] (Claustal)	17.88-4.23	100-120	30		2.8-2	190	15
	1.0-0	120-130	12		1-0	260-400	6-10

(*a*) Private communication. (*b*) Lohmannsfeld mill.

TABLE 292.—NUMBER OF THROWS ON COLLOM JIGS.

Mill No.	Size of Grains Fed.		Throws per Minute for both Coarse and Fine.
	Coarsest Jig.	Finest Jig.	
	Mm.	Mm.	
13	19.1 to 12.7	6.35 to 0	84
35	3 to 0 (1st spigot.)	3 to 0 (last spigot.)	145
44, 46, 47, 48	4.76 to 0 (1st spigot.)	1.17 to 0	134 to 125

It is not usual to make any further change after the conditions of best work have been once established, unless a radical change is made in the work of the jig.

Considerations which affect the amount of throw are as follows:

(1) The coarser the grains, the greater must be the throw, because coarse grains settle faster than fine grains and require a higher velocity of current and a greater quantity of water to lift them.

(2) The heavier the grains, the greater the stroke should be for the same reason as in the last case.

(3) A deeper bottom bed or higher tail board on the jig will generally call for a longer stroke, because there is more resistance to be overcome.

(4) If the amount of clearance space around the plunger is large, a longer stroke will be needed than if it is small, to make up for the leak.

(5) A plunger that is smaller than the sieve will require its stroke lengthened in proportion to the diminution; half the size will require twice the stroke.

(6) If there is any constriction in the water passage between the plunger and the sieve, as in the Collom jig, a longer stroke will be required to overcome the resistance.

(7) We may say in a general way the less hydraulic water used, the longer must be the stroke, but since hydraulic water contributes to pulsion and subtracts from suction, while increased stroke contributes to both pulsion and suction, it follows that increasing the hydraulic water is not equivalent to increasing the stroke.

(8) Although in § 450, it has been demonstrated that the number of strokes depends on the length of the stroke, practically in concentrating, the number of strokes is settled in the design of the mill and the mill man suits the length of stroke to the work he has to do. It would seem, therefore, that the two are inter-dependent one on the other within certain limits. This has been shown mathematically by Rittinger, who has derived the formula $\frac{n\ H\ \pi}{60} = V$, as applying to a *setzpumpe* where the plunger is the same size as the sieve and has no clearance. In this, n is the number of strokes per minute; H is the length of stroke in inches, that is, twice the radius of the plunger arm; and V is the velocity of water in inches per second required to hold the whole bed in suspension, whatever that may be, but is a constant on any given jig fed with a given size of feed. It is clear from the equation that as n increases, H must decrease, and *vice versa*, in order to give the constant value of V desired. This formula might be made applicable to modern jigs by introducing an individual coefficient for every jig, which should correct for plunger clearance and any difference between the area of the plunger and sieve.

§ 452. It is agreed by all that the mill man must judge of the condition of his jig by the appearance and feeling of its whole bed, and must vary hydraulic water or throw of the plunger or some other adjustment, until he gets it right. The whole bed must be loose and soft during pulsion, so that the fingers will settle into it without any effort as into quicksand, and when the tips of the fingers have reached the sieve a decided suction will be felt on the return strokes. The particles in the top layer must be lifted during pulsion and yet the pulsion must not be so strong as to cause boiling or the breaking through of large water currents in spots, nor the suction so strong as to cause hardened banks which the pulsion finds difficulty in softening. There is far more danger of these adverse conditions in fine jigging than in coarse. Where the jig is run with a bottom bed which is put on, then in order to get the best action of suction the bottom bed should be lifted during pulsion.

In this connection it may be said in the words of Mr. Carkeek, "If the corners and edges of the whole bed are right, the middle will take care of itself."

The amount of throw in the mills visited by the author is given in Table 283. Foreign practice is shown in Table 291. To help the mill man to judge the amount of throw required by the different sizes of feed, computations have

TABLE 293.—SUMMARY OF THE LENGTH OF STROKE OF JIGS COMPUTED FROM TABLE 283.

The Maximum Grain of Feed Lies between these Diameters.	Number of Jigs Considered. (1st sieve only.)	Diameter of Maximum Grain in Feed.			Length of Stroke on First Sieve.			Ratio of Average Stroke to Average Size of Grain.
		Highest.	Lowest.	Average.	Highest.	Lowest.	Average.	
Jigs in which the maximum size fed is known.								
Mm.		Mm.	Mm.	Mm.	Mm.	Mm.	Mm.	
64 to 32	5	54.0	38.1	41.67	101.6	38.1	67.94	1.63
32 to 16	11	25.4	18.0	21.56	89.1	25.4	49.95	2.32
16 to 8	33	16.0	8.3	11.75	69.8	12.7	36.48	3.10
8 to 4	26	8.0	4.4	5.81	43.4	9.5	23.47	4.05
4 to 2	28	4.0	2.1	3.03	41.3	1.59	14.34	4.73
2 to 1	13	2.0	1.22	1.71	19.1	3.97	12.27	7.18
1 to 0	3	0.91	0.64	0.73	6.35	3.97	4.76	6.52
Jigs in which the maximum size fed is unknown, being fed by later spigots of classifiers. The size given is that fed to the classifier.								
16 to 8	3	11.1	11.1	11.10	38.1	19.1	27.51	2.48
8 to 4	3	4.5	4.5	4.50	25.4	15.9	20.12	4.47
4 to 2	33	4.00	2.3	2.91	38.1	0.79	10.15	3.49
2 to 1	12	2.00	1.22	1.69	12.7	3.17	7.41	3.92
1 to 0	2	0.91	0.64	0.77	6.35	1.59	3.97	5.15

been made showing the relation of the throw to the size of feed as found in the mills. The results of computations are given in Table 293. In preparing this

TABLE 294.—CAPACITY, HYDRAULIC WATER AND POWER FOR JIGS IN AMERICAN MILLS.

Mill Number.	Jig Number.	Number of Compartments	Size of Feed.	Capacity per 24 Hours.	Net Area of each Sieve.	Capacity per Square Foot per 24 Hours.	Hydraulic Water per 24 Hours.	Hydraulic Water per Square Foot per Minute.	Water Used per Ton of Ore.	Horse Power Required per Jig.
			Mm.	Tons.	Sq. Feet.	Tons.	Gallons.	Gallons.	Tons.	
10	1	5	12.7–0	(a) 100–120	6.000	8.00–9.60	(a) 400,000	22.222	15.29	(b) 5
14	1	2	22.2–9.5	29	5.556	2.61	.....	.....	.....	.....
	2	2	9.5–0	58	5.556	5.22	.....	.....	.....	.....
17	1	2	10–7	.....	3.542	.....	23,542	2.112	.....	(c)
	2	4	7–5	.....	3.542	.....	10,772	0.528	.....	.....
	3	4	5–3½ or 3½–2	.....	3.542	.....	10,772	0.528	.....	.....
	4	4	2–0	.....	3.408	.....	23,542	1.099	.....	.....
	5	4	2–0	.....	3.408	.....	23,542	1.099	.....	.....
	6	4	2–0	.....	3.408	.....	23,542	1.097	.....	.....
	7	3	2–0	.....	3.111	.....	23,542	1.608	.....	.....
21	1	3	4.60–3.48	12	2.597	1.54	40,000	3.565	13.90	2
	2	4	3.48–1.22	10	2.597	0.96	40,000	2.674	16.68	1½
	3	4	1.22–0	8	2.597	0.77	35,000	2.340	18.24	1½
	4	4	1.22–0	8	2.597	0.77	30,000	2.005	15.64	1½
	5	4	0.64–0	8	2.368	0.84	.....	.....	.....	1½
	6	2	0.64–0	8	4.031	0.99	.....	.....	.....	1
26	1	2	6–0	10	5.653	0.88	25,000	1.535	10.42	.....
	2	3	.....	5	3.637	0.46	10,500	0.668	8.76	.....
	3	3	3–0	6	3.637	0.55	13,000	0.827	9.08	.....
26	1	3	5.7–3.6	15	3.778	1.32	75,000–100,000	4.595–6.127	24.32	About ½
	2	3	3.6–2.1	15–20	3.778	1.32–1.76	60,000–75,000	3.676–4.595	16.08	"
	3	3	2.1–1.5	12–15	3.778	1.06–1.32	50,000–60,000	3.064–3.676	16.99	"
	4	3	1.5–0.91	10–12	3.333	1.00–1.20	40,000–50,000	2.778–3.472	17.06	"
	5	3	0.91–0	10–12	3.333	1.00–1.20	30,000–50,000	2.083–3.472	15.16	"
	6	2	0.91–0	10–12	3.333	1.50–1.80	30,000–40,000	3.125–4.167	13.27	"
28	1	1	40–25	18	4.250	4.24	.....	.....	.....	1
	2	1	25–16	18	4.250	4.24	.....	.....	.....	(d) 1
31	1	2	Over 18	16½	4.500	1.80	.....	.....	.....	.....
	2	2	18–15	16½	3.778	2.14	.....	.....	.....	.....
	3	2	15–9	16½	3.778	2.14	.....	.....	.....	.....
	4	4	9–6	11¼	3.778	0.74	.....	.....	.....	.....
	5	4	6–4	11¼	3.778	0.74	.....	.....	.....	.....
	6	4	4–0	11¼	3.778	0.74	.....	.....	.....	.....
	7	4	4–0	11¼	3.778	0.74	.....	.....	.....	.....
	8	4	4–0	11¼	3.778	0.74	.....	.....	.....	.....
	9	4	2.5–0	11¼	3.778	0.74	.....	.....	.....	.....
	10	4	2.5–0	11¼	3.778	0.74	.....	.....	.....	.....
	11	4	2.5–0	11¼	3.778	0.74	.....	.....	.....	.....
43	1	1	25.4–11.1	10	7.000	1.43	.....	.....	.....	.....
44	1	2	4.76–0	20	5.194	1.93	.....	.....	.....	.....
	2	2	4.76–0	12	5.194	1.16	.....	.....	.....	.....
	3	2	4.76–0	8	5.194	0.77	.....	.....	.....	.....
	4	2	4.76–0	5	5.194	0.48	.....	.....	.....	.....
48	1	2	4.76–0	20	5.194	1.93	(e) 32,000 32,000	(e) 4.279 4.279	13.34	.....
	2	2	4.76–0	16	5.194	1.54	(e) 23,539 23,539	(e) 3.147 3.147	12.27	.....
	3	2	4.76–0	10	5.194	0.96	(e) 16,687 16,687	(e) 2.231 2.231	8.22	.....
	4	2	4.76–0	6	5.194	0.58	(e) 15,192 15,192	(e) 2.031 2.031	21.11	.....
	5	3	2.29–0	2.5	5.194	0.16	(e) 15,098 10,531 7,326	(e) 2.019 1.408 0.981	54.98	.....
	6	3	1.73–0	3.4	5.194	0.22	(e) 13,380 11,295 5,804	(e) 1.789 1.510 0.776	37.38	.....
	7	3	1.30–0	2.375	5.194	0.15	(e) 11,790 10,444 7,696	(e) 1.576 1.395 1.029	52.54	.....
	8	3	1.17–0	4.0	5.194	0.26	(e) 8,630 9,331 6,300	(e) 1.154 1.246 0.842	25.28	.....

(a) These are for 10 hours instead of 24. (b) The other jig of this mill also uses 5 horse power. (c) The three jigs of Mill 16 use ¾ horse power each. (d) All the jigs of this mill use 1 horse power each. (e) In this mill the quantities are given for the separate sieves of each jig

table from Table 283, only the first sieves of the jigs were considered, and such jigs as had the area of the plunger much less than that of the sieve, were omitted.

The first column simply serves to throw the jigs into classes. The second column states the number of sieves that were considered in each class. The third, fourth and fifth columns give respectively the highest, the lowest and the average maximum grain fed to any of those jigs. The sixth, seventh and eighth columns give respectively the highest, the lowest and the average length of stroke

TABLE 295.—CAPACITY, HYDRAULIC WATER AND POWER FOR JIGS, AS OBTAINED FROM VARIOUS AUTHORITIES.

Mill or Authority.	No. of Compartments.	Size of Feed.	Capacity per 24 Hours.	Net Area of Each Sieve.	Capacity per Square Foot per 24 Hours.	Hydraulic Water per 24 Hours.	Hydraulic Water per Square Foot per Minute.	Water Used per Ton of Ore.	Horse Power Required per Jig.
		Mm.	Tons.	Sq. Ft.	Tons.	Gallons.	Gallons.	Tons.	
Rittinger	1	.....	(a)	5.00	.....	54,072	7.51	.....	.....
Linkenbach	3	30–20	39.6	3.88	3.40	68,383	4.08	7.20	1⅛
Ditto	3	2–1½	19.0	3.88	1.63	45,588	2.72	10.00	1
Ditto	4	(b)	11.9	4.16	0.72	37,991	1.59	13.28	0.8
Kunhardt	2	19–1	48–86.4	3.45	6.96–12.52	43,088	4.33	2.91	.....
Ditto	2	4–1.4	28.8–43.2	3.45	4.17–6.26	21,544–26,930	2.18–2.71	2.81	.....
Ditto	2	1–0.35	19.2–24	3.45	2.78–3.48	.....	.....	.....	.....
Furman	3	30–20	38.4	4.28	2.99	54,720–64,800	2.96–3.50	6.49	1⅛
Ditto	3	2–1½	19.0	3.50	1.81	43,200–54,000	2.86–3.57	10.66	1
Commans	3	20–13	24–36	.....	.....	43,200–57,600	.....	7.00	1⅛
Ditto	3	3–1½	12–16	.....	.....	43,200–57,600	.....	15.01	1
Ditto	4	Below 2	6–12	.....	.....	.....	.....	.....	1
Koch (Gottesgabe mill)	2	30–25	15.8	.....	.....	52,824	.....	13.94	.....
Ditto	4	25–20	14.5	.....	.....	44,900	.....	12.91	.....
Ditto	4	20–15	13.2	.....	.....	42,259	.....	13.35	.....
Ditto	4	15–11	13.2	.....	.....	39,618	.....	12.51	.....
Ditto	4	11–8	10.6	.....	.....	34,336	.....	13.51	.....
Ditto	4	8–5	9.2	.....	.....	34,336	.....	15.56	.....
Ditto	4	5–2½	7.9	.....	.....	34,336	.....	18.12	.....
Ditto	4	2½–¾	6.6	.....	.....	34,336	.....	21.69	.....
Ditto	4	¾–0	4.0	.....	.....	31,694	.....	33.04	.....
Koch (Hammerwasche mill)	4	12–8	13.2	.....	.....	34,336	.....	10.85	.....
Ditto	4	8–5	6.6–10.6	.....	.....	31,694–34,336	.....	16.76	.....
Ditto	4	5–2	6.6–7.9	.....	.....	31,694	.....	18.37	.....
Ditto	4	2–½	5.3	.....	.....	31,694	.....	24.93	.....
Ditto	4	1½–¾	7.9	.....	.....	31,694	.....	16.73	.....
Ditto	4	¾–½	5.3	.....	.....	21,130	.....	16.62	.....
Ditto	4	½–0	3.2–4.0	.....	.....	13,206	.....	15.49	.....
Blömeke (Diepenlinchen mill)	5	4	11.9	(c)	0.50	57,050	1.66	19.99	.....
Ditto	5	2	6.6	(c)	0.28	38,033–47,542	1.11–1.39	27.08	.....
Gates' Catalogue No. 6	3	45–25	44.4	.....	.....	.....	.....	.....	1¾
Ditto	3	30–20	38.4	.....	.....	.....	.....	.....	1¾
Ditto	3	20–13	32.9	.....	.....	.....	.....	.....	1½
Ditto	3	13–8	27.6	.....	.....	.....	.....	.....	1½
Ditto	3	8–5	24.0	.....	.....	.....	.....	.....	1½
Ditto	3	5–3	21.1	.....	.....	.....	.....	.....	1¼
Ditto	3	3–2	19.2	.....	.....	.....	.....	.....	1⅛
Ditto	3	2–1½	19.0	.....	.....	.....	.....	.....	1
Blömeke (Breinigerberg mill)	2	8	66.1	4.23	7.81	64,633–86,175	5.31–7.04	4.76	.....
Ditto	4	⅛	7.9–9.3	2.17	0.91–1.07	.....	.....	.....	.....
Ferraris (Monteponi)	1	32	24 cu. m.	3.87	.....	.....	.....	.....	.....
Ditto	1	24–8	24 cu. m.	5.27	.....	.....	.....	.....	.....
Henry (Przibram)	....	22–16	39.6	.....	.....	11,726	.....	1.23	1
Ditto	....	16–12	35.6	.....	.....	11,726	.....	1.38	1
Ditto	....	12–9	29.0	.....	.....	11,726	.....	1.69	1
Ditto	....	9–6	29.0	.....	.....	11,726	.....	1.69	1
Ditto	....	6–4	22.4	.....	.....	8,557	.....	1.59	1
Ditto	....	6–3	7.92–11.9	.....	.....	34,863	.....	14.67	1
Ditto	....	4–2	7.92–11.9	.....	.....	34,863	.....	14.67	1
Ditto	....	2–0	3.3	.....	.....	34,863	.....	44.05	1
Ditto	....	3–0	3.3	.....	.....	34,863	.....	44.05	1

(a) 1,200 to 1,920 cubic feet. (b) Third spigot of pointed boxes. (c) This varies in this jig, being 2.03, 3.05, 4.55, 4.55 and 9.64 square feet respectively for the five sieves.

on the jigs of each class. The ninth gives the ratio of the average throw to the average diameter. In the upper part of the table, the last column shows that for the largest sizes the throw can be only a little more (1.6 times) than the diameter of the grain, but that for the fine sizes it has to be much larger (6.5 times). The intermediate sizes are graded from the smaller toward the larger. The

lower part of the table shows the same thing, but the ratios are of less weight since the jigs considered are those treating later spigots of the classifier, and the ratios are based on the maximum sizes fed to the classifier and not on those fed to the jigs.

Foreign practice regarding the length of stroke, as shown in Table 291, appears in every case to fall within the ranges given by the author for American mills. The averages seem, however, to be a little higher, especially on coarse jigs.

In regard to the amount of throw used on the several sieves of a multi-sieve jig, the majority of the mills gradually diminish the throw on the later sieves, owing to the lighter bottom bed. For these amounts the reader is referred to Table 283.

The smallest throw recorded by the author is $\frac{1}{64}$ inch on the last two sieves of the No. 5 jig in Mill 29. It should be noted that this mill has a very small stroke throughout and the number of strokes is among the highest.

One would naturally expect that the amount of throw on the Collom jigs would be large, owing to the small size of the plunger as compared to the sieve and to the constriction in the passage between them. The table shows this not to be true, however, as these three factors appear to be offset by the low height of the tailboard and the high velocity of the stroke, and in some cases by the larger quantity of hydraulic water, so that their throw is not above the average.

§ 453. Hydraulic Water Quantity.—In general, jigs treating coarse stuff require more water than those treating fine stuff, because larger grains settle faster and because water can pass up in a small number of large interstices with much less friction than in a large number of small interstices, even though the total sectional area may be the same in both cases, and because larger discharge orifices are required above and below.

The variation in the quantity of hydraulic water is more used for regulating the jigging work from hour to hour than any of the other three frequently used adjustments, viz.: rate of concentrates discharge, thickness of bottom bed and in some cases the rate of feed.

Some of the considerations which affect the work are as follows: Increase of water decreases suction and lessens the hutch product; decrease of water increases suction and with it the amount of hutch product. Again. increase of water increases pulsion, while decrease diminishes it. When sized products are jigged, the less the suction the better; hence a larger quantity of hydraulic water, if it can be afforded, will make the jig work quicker and better. When sorted products are jigged, much suction is desirable; hence, hydraulic water will naturally be diminished. When first spigot products or natural products containing mixed sizes and gravities are jigged, a conflict of interests occurs. The presence of large grains of heavy mineral makes for little suction and much hydraulic water, while the presence of fine ore makes for much suction to draw it down into the hutch. A usual compromise seems to be to use rather a large throw to the plunger to get the suction, and rather a large quantity of hydraulic water to soften up the whole bed and favor the settling of the large grains. In other words, to pay more attention to the fines than to the coarse because of the two the coarse grains can best take care of themselves. Probably the best plan of all is to use a sieve and added bottom bed so coarse that the whole concentrates shall go into the hutch and then run the jig with diminished hydraulic water and strong suction.

In regard to the water quantities to be used, exact rules cannot be given, because the quantity of water will depend upon the area of the sieve, the number of sieves, the quantity and quality of the ore fed, the number and length of the

strokes and the height of the tailboard. The final regulation must be according to the appearance and feeling of the whole bed as previously described under length of stroke. However, to give a general idea, the quantities used by some of the jigs in the mills are shown in Table 294, and data from the literature in Table 295, and to better serve for comparison, the amounts have been reduced to gallons per minute per square foot of sieve area, and to tons of water per ton of ore. The following facts from the table on American mills are noteworthy:

The amount used varies from 10,500 gallons per 24 hours on a three-sieve jig of Mill 25 to 400,000 gallons in 10 hours on the five-sieve jig of Mill 10. The average of all is about 65,000 gallons per jig per 24 hours. The average of all except Mill 10 is about 34,000 gallons in 24 hours.

The amount per square foot of sieve area varies from 0.528 gallon per minute in Mill 17 to 22.22 gallons in Mill 10. The average of all is 3.635 gallons. The hydraulic water used per ton of ore varies from 8.76 tons in Mill 25 to 54.98 tons in Mill 48. The average of all is 19.85 tons. Considering the water per square foot of sieve area, the Missouri blende jig (Mill 10) appears as if it were extraordinarily lavish in water, while the Lake Superior finishing jigs (Mill 48) appear as if they were economical; but if the quantity of ore treated is taken into account, the former is shown to be economical on account of its high capacity, while the latter are the most lavish of all, owing to their low capacity.

Table 295, obtained from various authorities, most of whom represent foreign practice, shows figures which come well within the ranges given by the author for American mills. The average of water used per ton of ore appears to be somewhat lower.

It would seem best to use as clear water as possible. Thus, Mill 28 has found that at times, without any apparent cause, on the fine jigs, the whole beds become as hard as boards, and of course the crude ore coming on passes over into the tailings. To remedy this, they have sometimes, if the water that was fed to the jigs was at all slimy, introduced clear water instead of the slimy water, the latter being removed by unwaterers.

For economy of water, Mill 22 uses the overflow of the box classifier as hydraulic water for the No. 2 jigs.

§ 454. Capacity of Jigs.—By this is meant the quantity of crude ore that can be handled in a given time. It is influenced by a number of considerations which will now be taken up. The width of the sieve seems to be one of the most important of these. Other things being the same, the capacity is nearly in proportion to the width; a jig with double the width would have double the capacity. This is not quite true, since all jigs have a strip of about 1 inch width on each side where poorer work is done and this counts more against capacity on a narrow sieve than on a wide one.

The capacity increases as the length increases, but not nearly in proportion thereto, and if longer and longer sieves were tried a length would soon be reached where further addition would gain nothing. The length of a sieve affects the capacity in this way: The act of jigging removes the mineral grains from the top layer and deposits them in the bottom bed of heavy concentrates. The concentrates are removed by automatic discharge or by passing into the hutch. The rate of settling of the mineral grains varies from the heavy, compact, pure, cubical grain, which settles from the top layer almost immediately, requiring perhaps only five or ten pulsions and suctions, to the flat scales and the included grains which settle slowly, requiring a large number of strokes. It follows that the longer the sieve the more of these grains will be caught, but, on the other

hand, each additional inch of length catches less than the previous one, while it calls for its full quantity of hydraulic water. To partially overcome this difficulty is one of the reasons for using a series of sieves, instead of one very long one, for where a series of sieves is used the hydraulic water, amount of throw, depth of the bottom bed and other adjustments can be varied to suit the conditions in that stage of the separation. As a rule, the second sieve receives less hydraulic water and less pulsion and depends more on suction, the third more still, and so on. In this way the series of sieves give a series of products graded in quality from rich to poor.

If a jig is overdriven, the head end simply becomes solidified by the grains which come faster than the jig can assimilate them, and the whole of the hydraulic water has to come up near the tail end, causing violent boiling and ruining the work of the jig. Great length of sieve aggravates this condition. With coarse work this fast feeding may become allowable by using longer stroke of the plunger and more hydraulic water, but little can be done in the way of increasing capacity on the fine jigs, because the longer stroke is not allowable, neither is greatly increased hydraulic water.

The area of the sieve surface is an important factor in the capacity of jigs, as, within certain limits, the length and width are probably to some extent interchangeable, that is to say, the capacity is proportional to the area, and it is not improbable that a sieve 24×24 inches (576 square inches), would give as good or better results than a sieve 19.2×30 inches (576 square inches), on the same quantity of ore, owing to the more deliberate rate of working and the more even bottom bed due to the shorter sieve. The manufacturer, however, if making a sieve 24 inches wide would probably make it 40 inches long, more or less, and thus gain the capacity due to length and area. This is probably because it costs more to make a wide jig than a long one and a wide jig necessitates a taller structure.

The quality of the separation affects the capacity; that is to say, a jig, to do good work, cannot be hard driven, but must be run moderately, because the particles must be separated more perfectly and require more time. The slow driven jig may use higher quantity of water per ton of ore treated, but does not always do so.

The size of the grains affects capacity as follows: Jigs working upon coarser grains have higher capacity than those working on finer. This is because of the longer plunger movement that can be used on coarse jigs, which causes a particle to settle farther in a stroke, and because of the lesser number of grains to be separated in a vertical column. For example, when jigging $\frac{1}{4}$-inch grains with a tailboard 4 inches high, the whole bed is only 16 grains high, and if the bottom bed of coarse concentrates is half of that, a grain of mineral has to settle only a distance equal to eight of its diameters in order to find itself among the concentrates. If, however, the grains are $\frac{1}{20}$ inch in diameter, the whole bed will be 80 grains high and the heavy grain has to pass below forty other grains before it finds itself among the concentrates. The amount of plunger throw, and the number of them cannot be increased sufficiently to bring the speed of separation of the fine grain up to that of the coarse.

§ 455. Boils and hard banks are very troublesome conditions which occur only on very fine jigs and limit their capacity. The hard bank forms from the suction which felts the particles together; the boils are little craters or holes in the bank, which give vent to the upward current due to pulsion, so violently in spots that the principles of good jigging are seriously interfered with. The mill man finds himself perplexed and obliged to select a mean course between the various evils. A thick bottom bed of coarse concentrates and a thin top layer are most favorable conditions for avoiding the hard bank and boils. It

will be necessary to look carefully, however, that the bottom bed does not run to waste over the tailboard. If strong suction is used to draw down the values, the hard bank is thereby made a maximum; mild suction must, therefore, be used. If much plunger throw is used, the boils are increased; little throw must, therefore, be used. If a moderate number of strokes is used with little throw, the rate of jigging is very small; the mill man therefore, will increase the number. A high number of strokes must, therefore, be used, in order to get more work done.

The per cent. of concentrates in the ore affects the capacity of a jig, the higher the per cent. the less the capacity. This is because when the concentrates form a large proportion of the jig stuff, it is impossible to get them away fast enough for high capacity, even though they are removed as fast as possible by both hutch and automatic discharge, and also because the larger proportion of concentrates forms a heavier whole bed from which it is more difficult to lift out the gangue.

It may be further said that the method by which the concentrates are removed will affect the capacity. Skimming gives the least; automatic discharge alone is second; the hutch only is probably third and the automatic discharge and hutch is probably most rapid. Varying conditions, however, may cause some change in this order.

The capacity is influenced by the ease of separation. Where two minerals to be separated are of widely different specific gravity, they separate rapidly upon the sieve and make high capacity possible. Where the minerals are in coarse crystals and break clean and free without included grains, even though their specific gravities are not far apart, high capacity is attainable. The treatment to get as easy a separation as possible, will vary with the kind of product to be jigged. If a sized product is jigged with a large quantity of water, so as to have little suction, the separation takes place at an extraordinary speed. If a sorted product is treated with a coarse sieve, a coarse, thick bottom bed, a thin top layer, and little water, making much suction, the treatment will be rapid even with moderately fine jig stuff. The finer the bottom bed and the finer the sieve, the slower will the treatment be. Where the jig stuff is fine, a thick top layer particularly makes slow jigging. In jigging the product of the first spigot of a classifier or a natural product, the method to be pursued to get the best capacity has already been indicated in § 453 under hydraulic water.

The height of the tailboard affects the capacity by making it greater as the height is diminished, but a tailboard of moderate height must be used for good work.

Irregularity of feed is a great source of loss of capacity. Over feeding spoils the work; under feeding wastes time. The feed of jigs should be, therefore, regulated to make it as even as possible.

It is impossible to give exact capacity of sieves for jigging; there are so many ways of increasing capacity, some of which are employed here and others there; there are so many grades of difficulty in the problem, some very easy, others very difficult of solution; and there are so many grades of good and bad work, one of which is called standard in one place, another in another place. The results as far as obtained in the mills are given in Table 294. The fifth column gives the total capacity of the whole jig, which ranges from 120 tons in 10 hours in Mill 10 to 2⅜ tons in 24 hours in Mill 48. The decrease from coarse jigging to fine jigging is well shown in Mills 21, 44 and 48. Since some jigs have large sieve area and others small, column No. 7 has been computed in order to get a comparative figure and gives the capacity per square foot of sieve per 24 hours, which ranges from 0.15 ton in Mill 48 to 9.60 tons in Mill 10, while the most of them are between 0.50 and 2.00 tons. The large capacity of Mill 10 is due,

first to the fact that although the gravities of the sphalerite and gangue are near one another, the crystallization is coarse, breaking easily to free sphalerite and gangue with little included grains, which can be jigged in coarse sizes; second, to the coarse sieve that is used, making a very free working open bottom bed; and third, to the large sieve area. No scheme of saving the finest slime ore has yet been adopted.

The small capacity of the finishing jigs of Mill 48 is due to the fact that they are jigging fine stuff with heavy gangue and are coaxing out the last of the light, flaky, frizzly leaf copper. None but the most careful and deliberate treatment could succeed here; it is probably the most difficult product for jigging that is to be found.

To illustrate the very high capacity of the class of jigs to which those of Mills 9 and 10 belong, Table 296 is given as the average work of a six-compartment No. 1, or roughing jig, with sieves 30×42 inches, when treating the undersize of a 9-mm. screen. This table is furnished by Mr. E. J. Tutty and Mr. Henry Faust (private communication). For the No. 2, or finishing jig, with

TABLE 296.—CAPACITY OF BLENDE JIGS OF SOUTHWEST MISSOURI.

Amount of Zinc in the Ore.	Capacity of Jig per 10 Hours.	Amount of Zinc in the Ore.	Capacity of Jig per 10 Hours.
%	Tons.	%	Tons.
5	150	20	100
10	125	30	80 to 90

six compartments, each 24×42 inches, the average capacity is 50 tons in 10 hours, of which as much as 25 tons may be turned out as clean concentrates. Working at the above capacities, the tailings should be free from mineral and the loss in slimes should be small.

Table 295 sums up notes and opinions of authorities upon foreign practice. Unfortunately, the data are not complete and comparisons cannot be readily made, but in general, it corresponds to the facts found by the author in American mills.

§ 456. Power Used in Jigging.—This may be divided into and discussed under the following heads:

Work of Lifting Sand.—During pulsion the whole bed, including the bottom bed and the top layer, are opened up and held in suspension, making large interstices through which the upward moving water passes. The lowest grains may not be lifted at all; the top grains are lifted the most; others are lifted according to their position, more toward the top, less toward the bottom. A rough computation of this work may be made by estimating the distance the water moves up and the weight of sand held in suspension, and we have weight multiplied by distance equals work.

Work of Drawing the Returning Water Down through the interstices in the whole bed and the sieve cloth is a case of friction of water flowing through small, irregular and crooked pipes. If the top layer and bottom bed were of one size, this might be approximately computed, but where these vary, the value can only be obtained by some empirical method. It should be said, however, that during the earlier part of the return stroke, the work is little or even zero, and it increases till it becomes probably one of the greatest elements in the total consumption of power by the jig.

The Friction on the Jig Walls and Sieve Cloth, Due to Moving the Large Mass of Water.—The large area of section and the slow speed of the water make this a small quantity. The smallest movement with highest speed, in Mill 29, is 400 pulsions of 0.0156 inch. The total pulsions are 6¼ inches, or pulsions

and suctions 12½ inches per minute. The greatest movement with moderately slow speed, in Mill 39, is 140 strokes per minute of 4 inches each, which gives 560 inches for pulsion and 1,120 inches, or 93 feet per minute for pulsion and suction together. This particular jig, however, gives a much larger figure than any other. As the passage is crooked and its shape irregular, this friction probably cannot be computed. These figures also show why a coarse jig uses more power than a fine one.

The Oscillatory Action.—There is in a plunger jig a definite oscillation of the water, consisting of a downward movement on the plunger side, with an upward on the sieve side, followed by the return or upward on the plunger and downward on the sieve side. This oscillation has a definite period of time for it to take place, due to gravity, and if the plunger were so speeded as to conform to this time, the forward work would be nearly restored by the return work. Practically, the rate of oscillations is much greater than that of gravity, and the machine works out of harmony with this vibration and its work is increased in consequence. No value exists of this work, but it is probably not large.

Inertia of Starting.—A certain amount of work is used in accelerating the velocity of the great mass of water from the dead point of the eccentric to half stroke. The power so used is given back to the piston during the retardation in the remaining half stroke, leaving probably a balance of no work performed.

Friction of the Piston on the Water.—A certain amount of work is expended in overcoming this. It increases as the clearance decreases. If the hydraulic water is fed in above the plunger, this friction will be greater upon the up stroke than upon the down stroke.

Mechanical Friction of the shaft in its boxes, of the eccentrics and of the belt, will be, under best conditions, a certain percentage of the whole power expended.

This analysis of the power used in jigging is practically unexplored ground and no figures exist to give values to the different contributing parts. Lump figures are given as obtained from the mills, in Tables 294 and 295. These, with the exception of the great jig in Mill 10, which uses 5 horse power, all lie between ½ and 2 horse power. The figures given for Mill 21 and from Gates catalogue both show that coarser jigs require more power than finer, owing to the greater distance traveled by the piston per minute.

Habermann[53], gives results of a dynamometer test of the power consumed by jigs at Przibram, as shown in Table 297. Ellis Clark, Jr.[26], states that according to a dynamometer test, a two-sieve jig at Przibram in 1881, jigging 28-mm. grains, with 4-mm. sieve holes, with sieves 1.26 m. long by 0.65 m. wide, and with 140 strokes per minute of 65 mm. each, consumed 2.437 horse power.

TABLE 297.—POWER FOR JIGS AT PRZIBRAM IN 1879.

Number of Sieves.	Size of Sieve.	No. of Throws per Minute.	Amount of Throw.	Horse Power Required.
	Inches.		Mm.	
4	15x34	200	6 to 8	2.36
2	15x31	160	13	1.64

Fraser & Chalmers use in computing new work (private communication): For a 1-sieve jig, 1½ horse power; for a 2-sieve jig, 2 horse power; for a 3-sieve jig, 2½ horse power; for a 4-sieve jig, 3 horse power; and they add 15% for friction of shafting, slip of belts, etc.

Rittinger estimates that jigs require $\frac{1}{10}$ to $\frac{1}{20}$ horse power per square foot of surface. This figure is lower than any of the above.

In closing, it may be said that the power required to drive a jig depends upon the area of the sieves, the height of the tailboard, the specific gravity of the jigging stuff, the length of stroke and the number of strokes per minute.

§ 457. Life of Jigs.—This depends upon the perfection of the design, the solidity of the construction, and the care with which they are handled, and also in the case of iron jigs upon the acidity of the ore and water.

Wooden Collom jigs at Lake Superior were used nearly continuously for 12 years for 24 hours a day, six days in the week, and were still doing good work, but needed to be replaced. Cast-iron jigs were put in, and have been used sixteen years and are still in good order. Lake Superior practice lays off a stamp head and all its jigs for repairs from time to time, so that the above figures should be somewhat reduced, for actual working time.

Kunhardt gives for European practice that wooden jigs last in good condition from 8 to 10 years, working 11 hours per day.

Jigs require but few repairs aside from the sieves, the wear on them being slight. Quotations of the cost of repairs from four mills are as follows: Mill 10, $25 per jig per year; Mill 16, no repairs in years; Mill 24, very small; Mill 31, $16 per year.

§ 458. Cost of Jigs.—Mill 22 reports that Harz jigs purchased cost $200, of which $90 is for iron work. This figure probably applies to three-compartment jigs and does not include freight. A home made jig can be made for $115. Best pine cost $20 to $22 per thousand at this mill.

Mill 30 reports for making four two-compartment Harz jigs, twelve three-compartment and sixteen four-compartment:

Iron work at factory	$3,037.00
Freight	505.45
Lumber, 29,400 feet at $22.50 per thousand	661.50
Labor on 32 jigs	2,670.00
Total for 32 jigs	$6,873.95
Average for one jig	214.81

Mill 15 reports the cost of four-compartment Harz jigs at $200 each.

All of the jigs above mentioned are wooden jigs with wooden frames.

§ 459. Labor for Running Jigs.—This depends upon the manner in which the jig is run; if it is fed and discharged automatically, it does not need so much labor. Table 298 gives the labor for running jigs with fixed sieves. In Mill 12 there are ten movable sieve jigs and Harz jigs, and they use six men per 10 hours at 90 cents per man. For the labor for hand jigs see § 374. In regard to European practice, Linkenbach allows one man for three 4-sieve jigs. Blömeke states that one man can attend two machines where the feed

TABLE 298.—LABOR FOR RUNNING JIGS.

Mill No.	Men per Shift.	Number of Jigs.	Cost per Man.	Mill No.	Men per Shift.	Number of Jigs.	Cost per Man.
10.....	2	2	$1.50 2.50	31....	1 3	14	$4.00 3.50
18.....	1	9	4.00	32....	2	20	3.50
20.....	1	12	3.00	34....	(a) 2	32	.....
22.....	2	16	1.50	35....	2	20	3.50
24.....	1	14	1.80	40....	2	16	3.50
26.....	1	12	3.00	43....	1	22	3.50
27.....	1	13	.....	86....	(b) 1	6	3.00
28.....	4	14	2.75				

(a) They also do the oiling. (b) He also attends the revolving screens and the cleaning jig.

and products are moved automatically, or two men to one machine where these have to be wheeled by hand. In this connection it may be noted that the quality of the labor employed is of considerable importance, as affecting the quality of the work done by the jig.

Limit of Sizes Jigged.—There are three limits to be considered in jigging: (1) The coarsest size jigged, (2) the finest size jigged, (3) the range of sizes jigged by any one jig. The first two of these are given in Table 299.

TABLE 299.—COARSEST AND FINEST SIZES FED TO JIGS.

Mill No.	Range of Sizes Fed to the Coarsest Jig.	Range of Sizes Fed to Finest Jig.	Kind of Product Fed to Finest Jig.	Mill No.	Range of Sizes Fed to the Coarsest Jig.	Range of Sizes Fed to Finest Jig.	Kind of Product Fed to Finest Jig.
	Mm.	Mm.			Mm.	Mm.	
10	12.7-0	3.18-0	Hutches of jig.	31	Over 18	2.5-0	Last spigot of classifier.
13	19.1-12.7	6.35-0	Undersize of trommel.	32	Over 12	2.0-0	" "
14	22.2-9.5	9.5-0	Undersize of screen.	33	12.7-7.9	3.3-0	" "
15	Over 12.4	2.3-0	Last spigot of classifier.	34	15-13	3.0-0	" "
16	20-10	2-0	Undersize of trommel.	35	Over 16	2.5-0	" "
17	10-7	2-0	Overflow of classifier.	36	12.7-7.9	3.3-0	" "
20	6.4-3.7	1.5-0	Undersize of trommel.	38	38.1-22.2	1.5-0	" "
21	4.6-3.48	0.64-0	Last spigot of classifier.	39	54-38.1	2.5-0	" "
22	Over 12	3-0	" "	40	20-7	3-0	" "
23	7	3-0	" "	41	15.9-9.5	3.2-0	" "
24	10-7	3-0	" "	42	12.7-6.4	.....	.....
25	6-0	3-0	Spigots of classifier and tailings of trunking machine.	43	25.4-11.1	1.30-0	Hutches of jigs.
				44	76.2-0	(a) 1.09-0	" "
				46	4.76-0	1.17-0	" "
26	5.7-3.6	0.91-0	Last spigot of classifier.	47	25.4-0	1.30-0	" "
27	38.1-25.4	2-0	" "	48	4.76-0	1.17-0	" "
28	40-25	2-0	" "	86	9-6.5	(b)	Oversize of trommel.
29	6-4	2.5-0	" "	88	.....	0.64-0	Spigot of classifier.
30	25-15	3-0	" "	92	.....	30-50 mesh.	Oversize of trommel.

(a) This, and probably the three following have a real maximum diameter of not over 0.5 mm., although they have passed through jig sieves of the sizes named. (b) Through 0.545 slot on 0.88 square hole.

§ 460. *The Coarsest Size Jigged* in a mill depends upon the perfection with which the mineral is unlocked, upon the amount of graded crushing, sizing, jigging and re-treatment of middlings, and finally, in a few cases, upon the maximum size of grains that a jig can treat on account of the high speed of water currents necessary for coarse stuff, and the consequent excessive power required. The more perfectly the heavy mineral is unlocked and, therefore, the less included grains there are found in the feed to the jig, the coarser may the feed be. Mills 27, 28, 30, 38, 39 and 43 are instances of cases where a sufficient amount of heavy mineral is unlocked to make the coarse jigging indicated worth while, and thereby save some of the loss in slimes which would be caused by finer crushing. Mill 40 tried a one-sieve jig on stuff ranging from 20 up to 50 mm., in order to save some preliminary crushing, but it was found that the concentrates had too much gangue attached.

The above instances illustrate the higher limit of feed size used when graded crushing, sizing and re-treatment of middlings is practised. Mill 10 is an instance where the whole treatment takes place upon one jig without any sizing whatever, and without any re-crushing of middlings. The ore, which is unlocked very freely, is all crushed to 12.7 mm. in order to equalize the losses between included grains on the one hand and slimes on the other.

The coarse jig in Mill 44 is an expedient for saving the large nuggets of copper from the clean ups of the steam stamp mortars, and they also incidentally save a lot of small copper.

As to the maximum size of grain that a jig will treat satisfactorily, a figure cannot be given positively. Mill 44 is an instance where jigging 76-mm. (3-inch) stuff is considered worth while, even where the largest lumps do not move. It is probable that the desired result would be better attained if the 76-mm. material was screened in a trommel with 25-mm. holes, the oversize hand picked and the undersize jigged. In fact this is practically the treatment given to similar stuff in Mill 47. Some authorities have given the maximum size that can be jigged as follows: Kunhardt, 32 mm. as usual European practice and 54 mm. at Lintorf; Davies, 41.3 mm. (1⅝ inches); Linkenbach, 30 mm.; Rittinger, 64 mm.; Le Neve Foster, 25.4 mm. (1 inch). Hand picking is used on stuff which is too coarse to be jigged. Some ideas on the lower limits of hand picking have been given in § 366.

§ 461. *The Finest Size Jigged.*—In the greater part of the mills this is not governed by the peculiarities of the ore or the extent to which graded crushing, graded sizing and graded jigging are used, but by the finest stuff that a jig is able to treat. The jig has proved such a perfect separator, as a rule, that it is fed with sizes down to its limit of good work and often beyond that point. The tailings of jigs treating fine classifier products, unless they are worked slowly, with open, free-working bottom beds, and thin top layers, which is usually not the case, contain too much of value, but the mill man has done all he can with the apparatus at command, so lets the tailings go to waste. Vanners, Wilfley tables or slime tables, are fed with the slime sorts that are too fine for the jigs.

Table 299 names the products fed to the finest jigs in thirty-five of the mills. Since many of these are the later spigot products or overflows of classifiers, the author is unable to state the exact maximum size of grain. They are quite fine; a number of them are not over 0.25-mm. maximum grain, and are mostly mixed products, ranging from a maximum grain down to very fine particles, and in some instances even down to the finest silt.

The author, in his computation for a hydraulic classifier, has taken the ground that the overflow should contain all the quartz of 0.25 mm. diameter and less. This places the feed to the finest jigs as containing quartz of 0.25 mm. diameter, and other minerals of those diameters which are equal settling, under free settling conditions, with 0.25-mm. quartz.

The authorities give the minimum products fed to jigs as follows: Kunhardt, seldom below 1 mm.; Davies, 0.79 mm. ($\frac{1}{32}$ inch); Linkenbach, 0.25 mm.; Le Neve Foster, 0.5 mm. ($\frac{1}{50}$ inch). At Clausthal two classes of graded slime between the sizes of 1 mm. and 0.5 mm. were formerly treated on jigs. Experiment upon central discharge slime tables 5.5 m. in diameter, however, showed that the latter had greater capacity, better separation and less cost, and they were, consequently, adopted. On the other hand, Bellom claims that on sands between 0.5 and 0.25 mm., jigs have greater capacity than tables, cost less, use less power and are easier managed, but preliminary sizing of feed must be more perfect, and they cause more attrition and, hence, more loss. This last view seems to be borne out by the practice in this country.

§ 462. *Ranges of Sizes Fed to a Single Jig.*—These have already been given and somewhat discussed in § 285 for all jigs treating trommel products. A few points which relate more closely to the work of jigs should be noted.

The smallest range of sizes shown in Table 283, was in Mills 27 and 28, and the largest in Mills 9 and 10. In Mill 27 a decision has recently been reached that there are too many trommels and instead of making eight sizes between 38.1 mm. and 2 mm., it is proposed to make only three or five. In the words of the superintendent: "Close sizing is entirely a question of ore and gangue. With the heavy ore of Mill 27 it is not necessary, and it is consequently a detriment, since it causes an increased loss in slimes."

Close sizing always has the advantage where it is desired to do very perfect work, for when it is used the whole bed is very open and free for the passage of water and in consequence a very perfect layering takes place, and when the concentrates are of rather low specific gravity, or there is a considerable amount of included grains or middlings of low specific gravity, such products may be saved to better advantage.

Sieve scales of many of the mills have larger gaps in them at the coarse end than would perhaps be allowed for the best separation, because the whole tailings of the coarser jigs go to re-crushing machines to unlock the included grains, and then to reconcentrators. The few grains, then, which may find their way into the first tailings, because the sieve scale is not sufficiently close to save them, all have a chance to be saved later. The loss from re-crushing these few grains

is insignificant, while the saving of multiplication of trommels and jigs to gain a perfect sieve scale may be very large.

As has been already shown in § 293, there are some imperfections in the work of trommels, so that the range of sizes in the jig feed is somewhat greater than would be indicated by the sizes of holes in the limiting trommels. In the case of classifiers, however, their work is much more imperfect (see § 352), there being practically no classifiers which do not allow very small particles to discharge with the larger sizes and as a consequence the range of sizes in the feed to jigs treating classifier products is quite large.

To illustrate the effect of fines when jigging natural products or classified products, the following sizing tests and assays are given:

In Mill 40, treating Gagnon ore, all the spigots of the No. 1 or Carkeek classifier are jigged together. Goodale[43] found that the tailings of the jigs doing this work assayed 2.7 ounces of silver per ton and 1.65% copper, and yielded to sizing the results given in Table 300. Efforts were made to improve this by putting two classifiers side by side, giving each half the work to do, also by substituting an Evans classifier, but with no better results.

TABLE 300.—SIZING TEST OF JIG TAILINGS AT MILL 40.

Sizes.	Percent of Material.	Assay in Silver.	Assay in Copper.
		Ounces per Ton.	%
On 10 mesh	3.9	3	1.5
Through 10 on 20 mesh	12.65	2.5	1.2
Through 20 on 40 mesh	45.80	2.2	1.37
Through 40 on 60 mesh	16.19	2.4	1.55
Through 60 on 80 mesh	10.00	2.4	1.72
Through 80 on 100 mesh	4.05	3.0	1.85
Through 100 mesh	4.70	7.0	4.00

In Mill 39, treating ore from the Gray Rock mine, each spigot product was treated on a separate jig. Goodale[43] found that the jig tailings assayed 2.85 ounces silver per ton, and 1.41% copper, and yielded to sizing and assaying the results given in Table 301. Sizing tests from other mills given by Goodale, show practically the same results.

In Mill 25 ore containing limestone and galena, after passing through a 6-mm. round hole, is jigged without any sizing on No. 1 jigs. The sizing tests

TABLE 301.—SIZING TESTS OF JIG TAILINGS AT MILL 39.

Sizes.	Percent of Material.	Assay in Silver.	Assay in Copper.
		Ounces per Ton.	%
On 10 mesh	2.26	2.60	0.86
Through 10 on 20 mesh	17.56	2.60	1.21
Through 20 on 40 mesh	46.06	2.36	1.18
Through 40 on 60 mesh	16.36	2.28	1.13
Through 60 on 80 mesh	8.37	2.00	1.16
Through 80 on 100 mesh	4.16	2.00	1.35
Through 100 mesh	5.22	3.44	2.68

and analyses of the feed and products are given in Table 302. The coarse concentrates of this jig are quite rich in lead, but the author has no figures on the quantity or quality of them. Other results from the same jig as obtained by Munroe and given in Table 303, show off the assays better.

Munroe also gives Table 304, for the No. 2 jig of Mill 25.

TABLE 302.—SIZING TESTS OF FEED AND PRODUCTS OF JIG NO. 1 IN MILL 25.

Sizes.	Percent of Material.	Assay in Lead. Percent.
Feed to the jig.		
Through 6 mm. on 4 mm.	2.0	.....
" 4 " " 1 "	41.2	.....
" 1 " " ¼ "	25.0	.....
" ¼ " " 0 "	31.8	.....
Hutch product as caught by a box classifier.		
On ⅝ mm.	11	79.4
Through ⅝ mm. on ¼ mm.	5	39.2
" ¼ " " $\frac{1}{16}$ "	12	22.6
" $\frac{1}{16}$ " " ⅛ "	39	14.1
" ⅛ " " 0 "	33	17.2
Tailings of the jig.		
Through 6 mm. on 1 mm.	60.2	1.03
" 1 " " ¼ "	29.6	0.91
" ¼ " " 0 "	10.2	2.25

TABLE 303.—MUNROE'S SIZING TESTS ON THE NO. 1 JIG OF MILL 25.

Size.	Percentage of Feed in Each Size.	Lead in Feed.	Lead in Hutch Product.	Lead in Coarse Concentrates.	Lead in Tailings.
Mm.		Percent.	Percent.	Percent.	Percent.
6 to 1	41.1	6.32	0	16.20	1.06
1 to ¼	29.6	9.10	74.0	7.97	0.96
¼ to ⅛	9.3	13.81	19.2	0	0.71
⅛ to $\frac{1}{16}$	1.5	12.93	14.8	0	1.09
$\frac{1}{16}$ to $\frac{1}{32}$	2.2	7.84	8.8	0	1.74
$\frac{1}{32}$ to 0	16.3	12.22	16.4	0	6.07
Average ...	.....	8.98	22.3	16.54	1.53

TABLE 304.—MUNROE'S SIZING TESTS ON THE NO. 2 JIG OF MILL 25.

Size.	Percentage of Feed in Each Size.	Lead in Feed.	Lead in Hutch Work.			Lead in Tailings.
			1st Sieve.	2d Sieve.	3d Sieve.	
Mm.		Percent.	Percent.	Percent.	Percent.	Percent.
Over ¼	8.9	40.99	79.69	70.34	41.80	3.94
¼ to ⅛	43.6	16.76				1.02
⅛ to $\frac{1}{16}$	13.3	16.40				0.62
$\frac{1}{16}$ to 0	34.2	32.58				11.97
Average...	.....	24.75	Average of three sieves, 74.00.			5.24

§ 463. All the figures in these tables show that when jigs are treating either classified products or natural products, there is a tendency of fine mineral to go into the tailings, and by increasing the suction in order to prevent this as far as possible, some of the fine gangue is also sucked down into the hutch product. The reason why this is allowed is one of expediency. The jig making hutch work is a very efficient machine; that is to say, it does a large amount of work and saves a large proportion of the fines for the amount of mill floor it covers. Its use, therefore, saves cost of mill construction and mill men have not had at hand any better means of handling this material. If some means can be devised for sizing accurately at 1 mm. or better 0.75 mm., sending all above this size to jigs and all below it to tables of the Wilfley type, then this difficulty will be overcome.

The last hutch product of a jig which has to handle fine material with the coarse, must always carry considerable gangue if the tailings are to be brought down to the lowest limit, and this product will need further treatment to bring it up in value.

An example of how successfully a jig may work, even though it has a very wide range of sizes to treat, including the finest slimes, is found in Southwest Missouri zinc practice, of which Mills 9 and 10 are examples. Here the first or roughing jig is fed with stuff ranging from 9 or 12 mm. to 0, and its hutch products are cleaned on a second or finishing jig. Average work of the district is to take ore carrying about 8% zinc and make tailings carrying only about 1½% zinc, at a total cost of about 29 cents per ton. This is possible because the blende is in large coarse crystals and is in large measure unlocked from the gangue by coarse crushing. The coarse crushing does not make much slimes. The jigs are run with coarse sieves, so that they have open, free-working bottom beds and suction has full play to save the fine ore.

A foreign example of the application of similar treatment is found in Cornwall where, according to Kunhardt, the practice exists of making only two sizes between 32 and 3 mm., in dressing copper pyrites with a rock gangue, where concentrates of a very poor grade answer the commercial requirements; also at the dressing works at Lauremburg in Nassau, in the treatment of an ore of argentiferous galena and blende, with a siliceous gangue. The results from the jigging of this material are reported to have been very satisfactory.

Another instance is at Lautenthal, where only two sizes, 32 to 13.3 mm. and 13.3 to 2 mm., are made in separating blende from quartz, using jigs with two compartments. The details are as follows:

Size of feed	32. to 13.3 mm.	13.3 to 2 mm.
Size of sieve hole	6.5 mm.	2 mm.
Height of feed apron	45 mm.	23 mm.
Height above the sieve of inverted dam of the discharge.	35 mm.	15 mm.
Length of plunger stroke	40 mm.	30 mm.
Number of strokes per minute	140	130
Capacity per hour	1½ cubic meters.	1½ cubic meters.
Quality of bottom bed	Hard.	Soft.
Quality of tailings	Contain some clean blende.	Contain very little clean blende.

§ 464. Minimum Difference in Specific Gravity of Minerals to be Separated.—As has already been stated, the greater the difference in specific gravity the easier is the separation, and conversely, the nearer the gravities are to each other, of two minerals that are to be separated, the more difficult is the separation. For example, minerals that are as near to each other as blende (specific gravity 4), and pyrite (specific gravity 5), are difficult to separate by jigging, and indeed their separation at all may depend on their mineral aggregation and fracture. If they are perfectly unlocked from each other and are in roundish grains, then they can be separated. If, however, the pyrite is more in flattish grains, and the blende in roundish, then they cannot be separated, since roundish grains settle faster than flattish grains. If the pyrite is in roundish grains and the blende is in flattish, then they are easily separated.

On account of the difficulty of separating these two minerals, various processes, such as roasting followed by jigging, roasting followed by magnetic treatment, and others are used, not only for separating blende from pyrite, but also from siderite and barite. Some of these processes are described in Chapter XVIII.

Bibliography of Jigs.

This will be found at the end of Chapter XV.

CHAPTER XV.

LAWS OF JIGGING.

§ 465. The action of the currents in the beds of the various types of jigs will now be considered:

In the Harz or plain eccentric jig, pulsion is given intermittently, alternating with suction, and the times devoted to them are about equal.

In the accelerated jig, pulsion is given intermittently, but its time interval is considerably shorter than that of the alternating suction.

In the pulsion jig, pulsion is given intermittently, but the intervening times are devoted to repose, in which settling can take place undisturbed by suction.

In the siphon separator (*Heberwäsche*) the pulsion is continuous, with no breaks for either suction or repose.

In all these types of jigs, the pulsion current acts under hindered settling conditions, and will now be considered. The laws affecting the suction current will be taken up later.

§ 466. Hindered Settling, General Principles.—This is where particles of mixed sizes, shapes and gravities, in a mass, free to move among themselves, are sorted in a rising current of water, the rising current having much less velocity than the free settling velocity of the particles, but yet enough so that the particles are in motion. The arrangement of the particles is so positive that if one of them be moved up or down from its chosen companions, it will be found, when set free, to return immediately to practically the same group as before.

Hindered settling is affected by the same qualities of both minerals and liquids as free settling (see § 354). It adds, however, the effect of crowding grains together so thickly that the spaces between them are nearly as small as they would be in a closely sized product piled in a heap. Every particle in the mass is poised in the upward-moving water, settling issues with those above it, around it and below it. If a grain above it has greater settling power it quickly gets below, if one below it has less, it quickly rises.

The effect of this upon mixed sizes of any one mineral, quartz, for example, will be to arrange them according to size; the largest grains will find their way to the bottom; the smallest will rise to the top. This order will only be interfered with by flat or elongated grains which will be a little higher in position than their size would seem to imply.

The effect upon mixed sizes of two minerals of two specific gravities, for example, quartz and galena, will be to place grains in groups which may be said to be equal settling under hindered settling conditions, but the ratio between the diameters of the quartz and galena in any one of these groups, is much greater than that obtained under free settling conditions. This ratio is of great importance, but there seems no way to get values for it except by direct test.

§ 467. Tubular Classifier Tests on Hindered Settling.—Tests were made by the author to obtain values for these ratios and to investigate the whole subject of hindered settling. For this purpose, a tubular classifier was designed

of the form shown in Fig. 345, which consists of a tin cone, *a*, with an overflow, *f*, united to a tube of glass, *b*, by a rubber connector, *c*, and having a water-supply, *d*, regulated by the cock, *g*, and a bulb, *e*, joined by a rubber connector, *h*. If this apparatus be filled with water, and a sample of mixed sands, which pass through a 10-mesh sieve (an ordinary 8-ounce bottleful represents the quantity used), be charged gradually at the top, and a slight upward current of water be admitted through the tube, *d*, the sands will rapidly assume a condition of approximate equilibrium. Here we have sands, say, of two specific gravities, and of sizes ranging from 10 mesh to finest slimes, which are held in gently-moving suspension by the slow upward current, and in a crowded condition, so much so that the volume of sand in the tube at any given time is nearly, if not quite, equal to the volume of the water. This device is well adapted to secure the conditions of hindered settling and to deliver the samples for study.

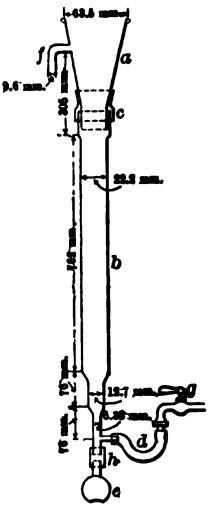

FIG. 345.—TUBULAR CLASSIFIER.

By means of this classifier, the behavior of the minerals named in Table 257, each paired with quartz, was tested. Each of these pairs was treated in the classifier (Fig. 345), by allowing from one-half hour to two hours for the grains to come to equilibrium; and since the larger part of the

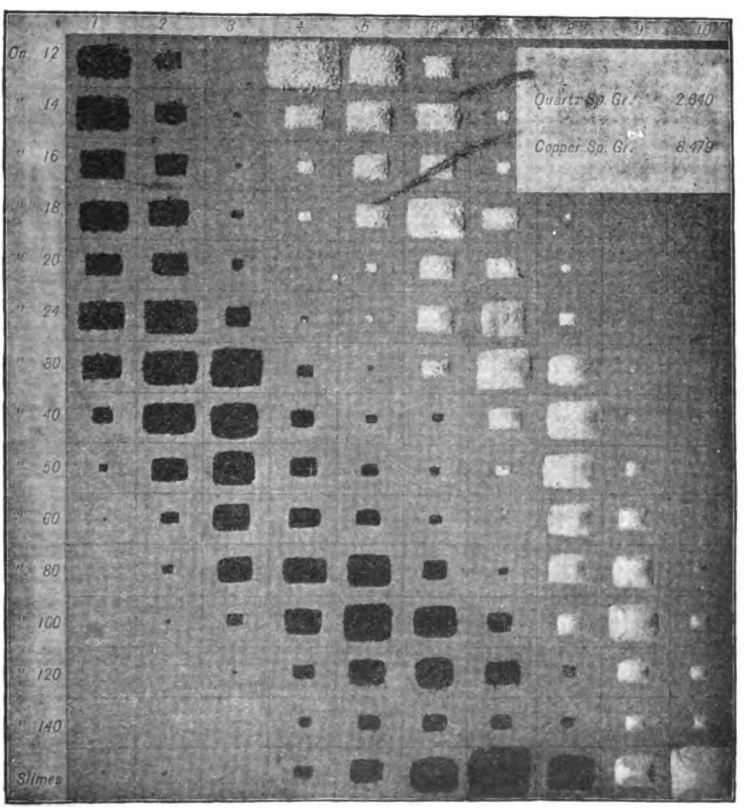

FIG. 346.—SEPARATION OF QUARTZ AND COPPER BY TUBULAR CLASSIFIER AND SIEVES.

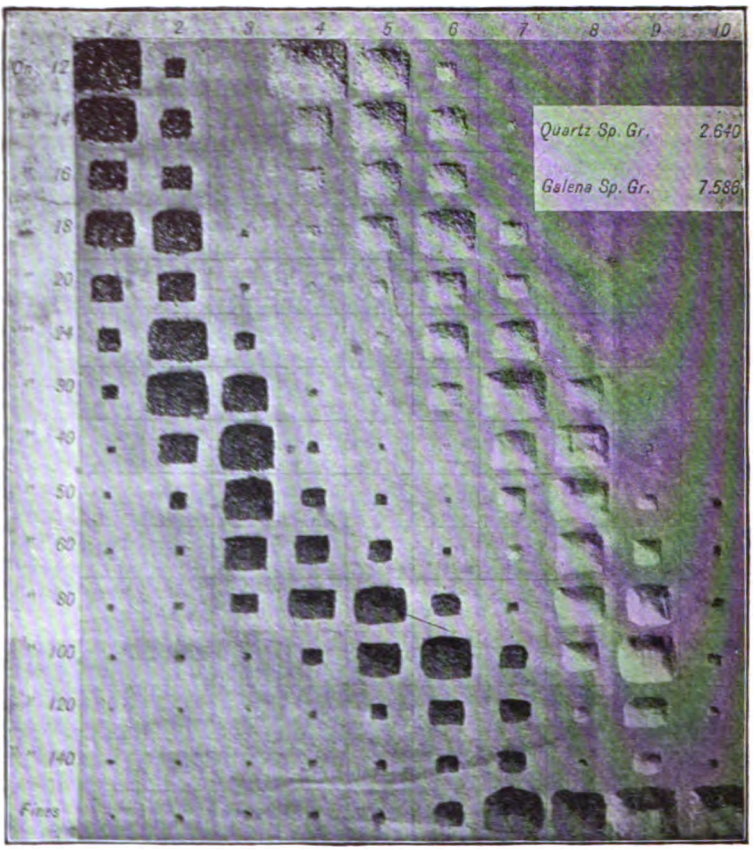

FIG. 347.—SEPARATION OF QUARTZ AND GALENA BY TUBULAR CLASSIFIER AND SIEVES.

sorting is done in the first minute, we may consider that the work is completed in half an hour. While the sands are still kept in gently-moving suspension, the current is slightly slackened by means of the cock, *g*, and the heavier grains are allowed to find their way down into the bulb, *e*. When the bulb is full, the rubber connector, *h*, is pinched with the thumb and finger, and the bulb is replaced with a new one, which has been completely filled with water, care having been taken to remove the bubble of air from the neck. In like manner the second bulb is filled and removed, and a third, a fourth, and so on until all the sand, to the finest slimes, has been drawn off. The finest silt will overflow above at *f*, along with a few particles carried over by greasy flotation. This should be caught, and may be called the last bulb or drawing.

Each of these drawings, which were ten in number, was carefully dried, sized in the nest of sieves (see Table 258), and note made of the character of each size obtained. For example, the sizes in the galena series (see Fig. 347), in the fifth bulb, were found to be perfectly pure quartz down to the 30-mesh sieve. The 40-mesh contained a little galena; the 50-mesh was nearly all galena, with a little quartz; and all the sizes below 50-mesh were pure galena.

The twelve pairs of minerals were all treated in this way, and as a means of ...ving the results, photographs were taken of the actual grains arranged

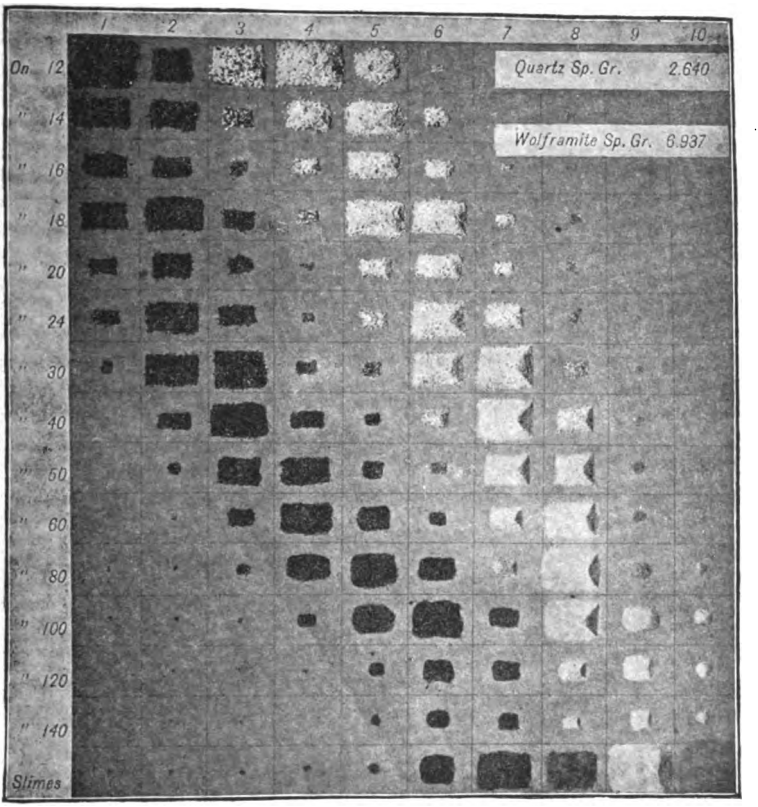

FIG. 348.—SEPARATION OF QUARTZ AND WOLFRAMITE BY TUBULAR CLASSIFIER AND SIEVES.

in the form of a graphical plot. In these photographs (see Figs. 346 to 357), the vertical columns Nos. 1, 2, 3, 4, etc., represent the successive bulbs. The horizontal lines indicate groups of particles resting on like sieves.

§ 468. RESULTS OF THE TUBULAR CLASSIFIER TESTS.—Examining the plots of the various minerals and gravities, we see a general set of features possessed in common, but changing a little with each successive photograph. First, we have, in copper (Fig. 346), a range of clean, pure quartz hills and also a range of clean copper hills and, between the two, a valley almost destitute of grains, which is widest a little above the middle. In arsenopyrite (Fig. 351), the valley is gone on the 100-mesh line and we have a plateau instead. In chalcocite (Fig. 352), the plateau has reached up to the 50-mesh line. In pyrrhotite (Fig. 354), it has reached the 40-mesh line. In epidote (Fig. 356) the plateau has disappeared below 24-mesh, and a single wide range of hills has taken its place. The above change of features is due to the difference in specific gravity of the heavy mineral. As the specific gravity lessens, the two ranges of hills come nearer together.

Estimates were made of the percentage of the heavy mineral in every hill and tables of them are given in *Am. Inst. Min. Eng.*, Vol. XXIV., pp. 433 to 446. Those of galena are given here in Table 305 for illustration.

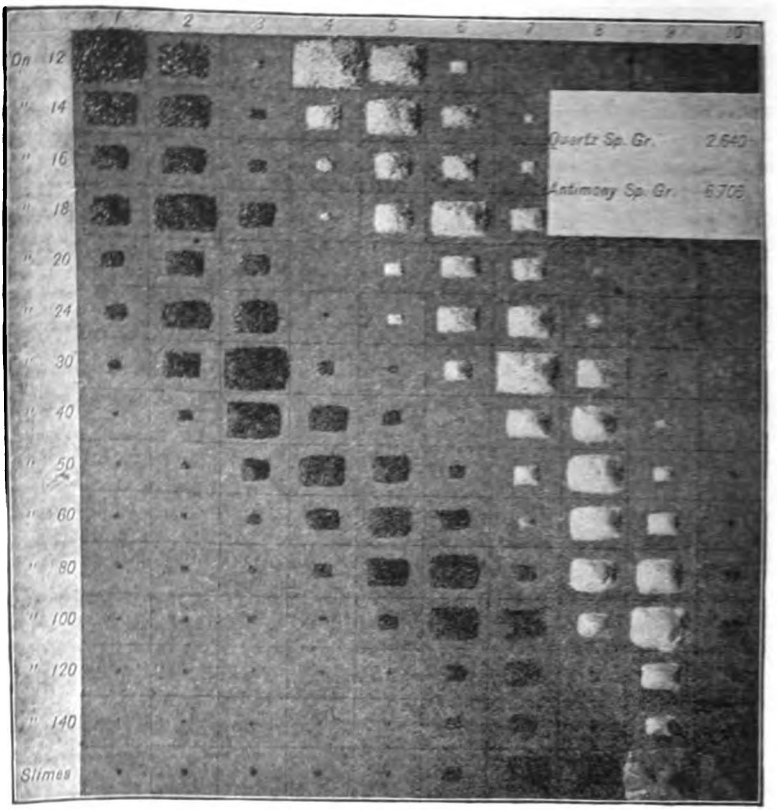

FIG. 349.—SEPARATION OF QUARTZ AND ANTIMONY BY TUBULAR CLASSIFIER AND SIEVES.

TABLE 305.—ESTIMATED PERCENTAGE OF GALENA IN THE HILLS OF FIG. 347.

Sieve-mesh.	1	2	3	4	5	6	7	8	9	10
12	100	100	.....	.....	.....	.....	.....	.....	.....	.....
14	100	100	.....	.....	.....	.....	.....	.....	.....	.....
16	100	100	.....	.....	.....	.....	.....	.....	.....	.....
18	100	100	100	.....	.....	.....	.....	.....	.....	.....
20	100	100	100	.....	.....	.....	.....	.....	.....	.....
24	100	100	100	95	.....	.....	.....	.....	.....	.....
30	100	100	100	75	.....	.....	.....	.....	.....	.....
40	100	100	100	100	50	.....	.....	.....	.....	.....
50	100	100	100	100	100	50	.....	.....	.....	75
60	100	100	100	100	100	100	.....	.....	.....	75
80	100	100	100	100	100	100	40	.....	.....	75
100	100	100	100	100	100	100	90	.....	.....	50
120	100	100	100	100	100	100	100	80	.....	50
140	100	100	100	100	100	100	100	40	.....	60
Slimes	100	100	100	100	100	100	100	95	60	75

The weights of the hills of three bulbs were taken for all the figures except that of magnetite, and from them the estimated weight of each mineral in each hill was calculated by using the percentages previously estimated. Those for galena are here given in Table 306, for illustration. Those for all the others

Am. Inst. Min. Eng., Vol. XXIV., pp. 449 to 462.

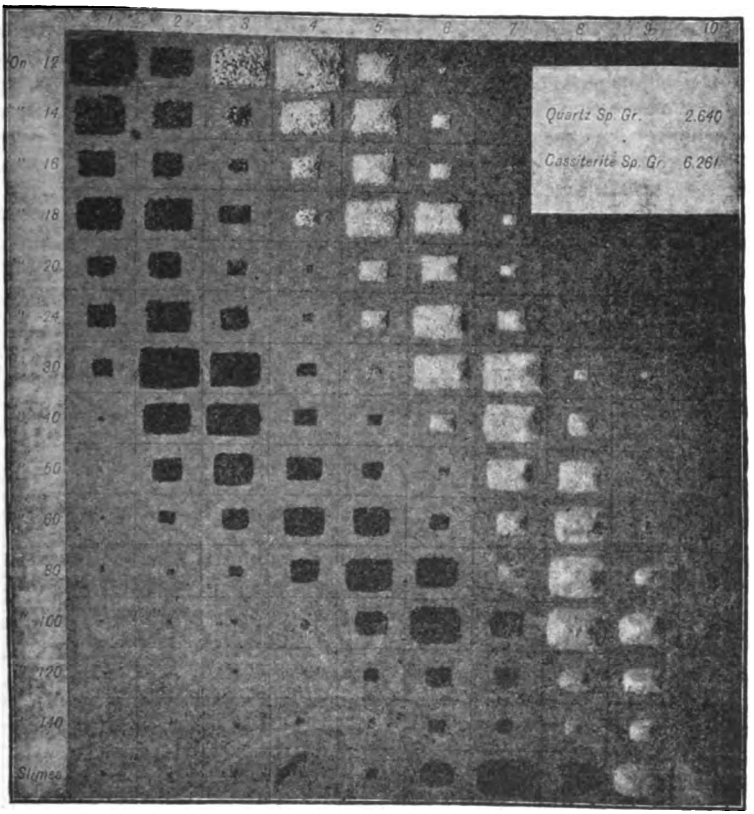

FIG. 350.—SEPARATION OF QUARTZ AND CASSITERITE BY TUBULAR CLASSIFIER AND SIEVES.

TABLE 306.—ESTIMATED WEIGHTS OF QUARTZ AND GALENA IN THE HILLS OF FIG. 347.

Sieve. Mesh.	Bulb No. 5.		Bulb No. 6.		Bulb No. 7.	
	Galena. Grams.	Quartz. Grams.	Galena. Grams.	Quartz. Grams.	Galena. Grams.	Quartz. Grams.
12	.....	8.261	.....	0.0880	.....	.....
14	.....	11.718	.....	1.447	.....	.....
16	.....	5.525	.....	1.946	.....	0.0943
18	.....	6.412	.....	10.582	.....	0.3585
20	.....	0.4273	.....	4.436	.....	0.5507
24	.....	0.1306	.....	6.790	.....	3.465
30	.....	0.0129	.....	3.268	.....	12.982
40	0.0339	.....	.....	0.0570	.....	5.897
50	0.2408	.....	0.0485	.....	.....	1.685
60	1.696	.....	0.1170	.....	.....	0.1737
80	16.335	.....	4.918	.....	0.1950	.....
100	7.705	.....	21.141	.....	2.955	.....
120	0.2378	.....	4.523	.....	3.738	.....
140	0.0580	.....	2.378	.....	3.382	.....
Slimes	0.1310	.....	1.902	.....	25.040	.....
Total	26.4270	32.5018	35.0275	28.6140	35.3100	25.1492

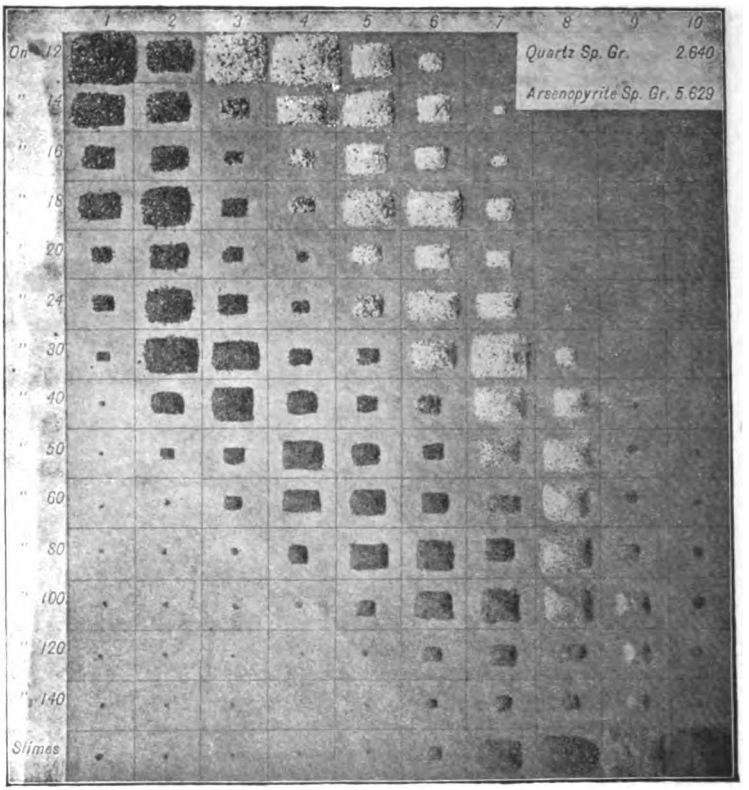

FIG. 351.—SEPARATION OF QUARTZ AND ARSENOPYRITE BY TUBULAR CLASSIFIER AND SIEVES.

Having obtained all this data, it was possible to compute the hindered settling ratios of different minerals, that is, the ratio of the diameters of those particles which are equal settling under hindered settling conditions. The mode of computation, to obtain the ratio of diameters of the particles of quartz and galena in equilibrium, for any given column or bulb, may be shown by taking as an example Fig. 347, and bulb No. 5 of Table 306. Here the average diameter of the quartz particles was obtained by multiplying all the quartz-weights for bulb No. 5 by their diameters, (obtained by taking a mean of the sieve hole through which they pass and that on which they rest), and dividing the sum of the products by the sum of the weights. The galena figures for bulb No. 5, treated similarly, give an average diameter for the galena particles. This diameter of quartz is then divided by the diameter of the galena. Two other bulbs were treated in the same way. In like manner computations were made upon all of the eleven minerals, using three bulbs for each, and these hindered settling ratios are given for all of the minerals except magnetite in Table 307.

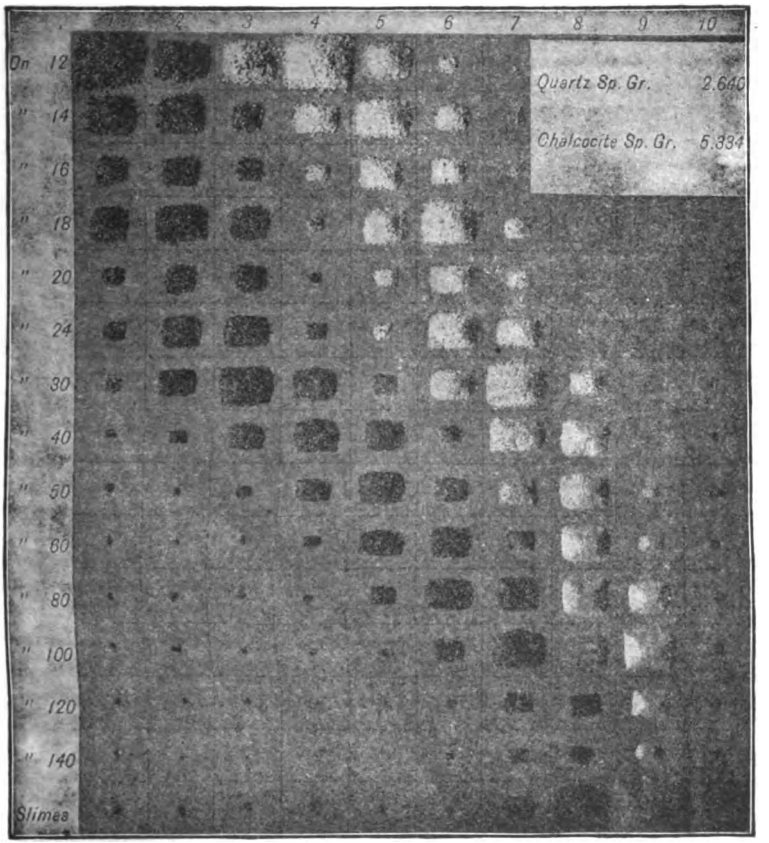

FIG. 352.—SEPARATION OF QUARTZ AND CHALCOCITE BY TUBULAR CLASSIFIER AND SIEVES.

TABLE 307.—HINDERED SETTLING RATIOS OR MULTIPLIERS FOR OBTAINING THE DIAMETER OF THE PARTICLE OF QUARTZ WHICH IN THE TUBULAR CLASSIFIER WILL BE IN EQUILIBRIUM WITH THE MINERAL SPECIFIED.

Quartz and	Ratio of the Diameter of Quartz to that of the Mineral.					
	Column 4.	Column 5.	Column 6.	Column 7.	Column 8.	Average.
Copper	.....	8.373	7.791	9.629	.....	8.598
Galena	.....	6.325	5.656	5.544	.....	5.843
Wolframite	.....	4.924	5.381	5.161	.....	5.155
Antimony	.....	4.816	4.982	4.942	.....	4.897
Cassiterite	.....	4.944	4.713	4.436	.....	4.698
Arsenopyrite	.....	3.847	3.747	3.617	.....	3.737
Chalcocite	.....	3.464	3.246	2.636	.....	3.115
Pyrrhotite	2.640	2.795	2.988	.....	.....	2.808
Sphalerite	.....	2.308	2.080	2.042	.....	2.127
Epidote	.....	1.702	1.610	2.798	.....	2.037
Anthracite	.....	.....	0.181	0.180	0.175	0.179

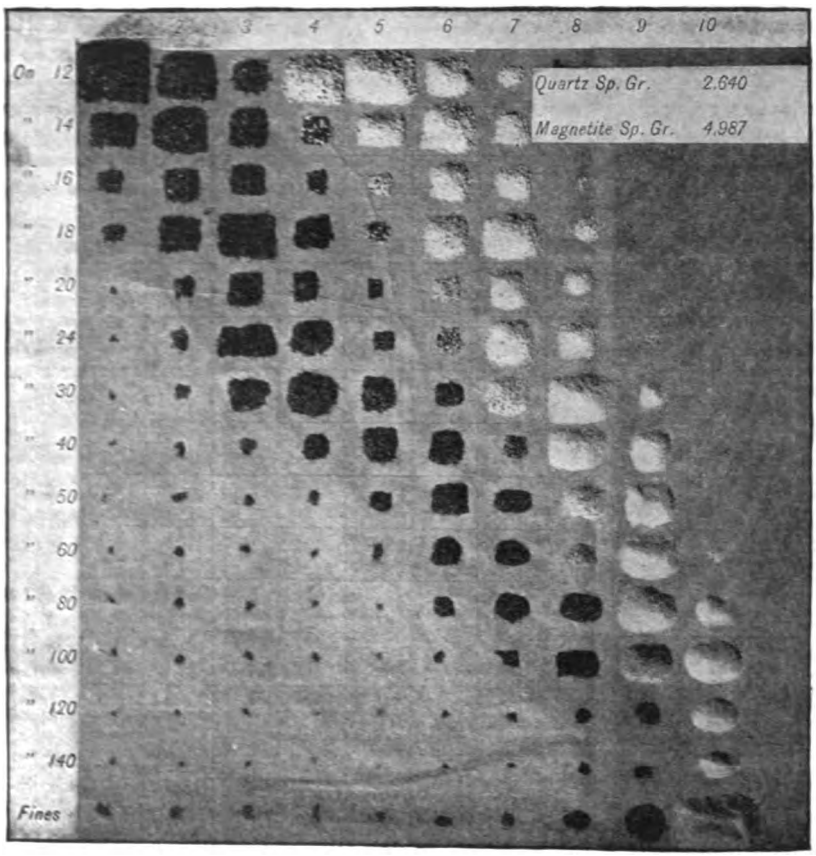

FIG. 353.—SEPARATION OF QUARTZ AND MAGNETITE BY TUBULAR CLASSIFIER AND SIEVES.

These hindered settling ratios give us the law by which particles of different minerals are separated under hindered settling conditions. They show that under such conditions as existed in the tubular classifier on grains between 10 and 100 mesh, a particle of galena will go below every particle of quartz whose diameter is less than 5.842 times the diameter of the galena particle; a particle of arsenopyrite will go below every particle of quartz whose diameter is less than 3.737 times the diameter of the arsenopyrite particle, and so on for the other minerals. By comparing these hindered settling ratios with the free settling ratios in Table 261, we see how much larger the former are and, therefore, how much easier a separation may be effected in the former case. We also see how it is that particles which are equal settling under free settling conditions can be separated under hindered settling conditions.

§ 469. The idea of classification by hindered settling of minerals taken by pairs, may be also conveyed by Fig. 358, which represents the relative sizes and positions in the vertical columns of particles of minerals of two specific gravities, both ranging from the same maximum diameters to dust, just as they placed themselves in the tubular classifier. In each case the diameters increase

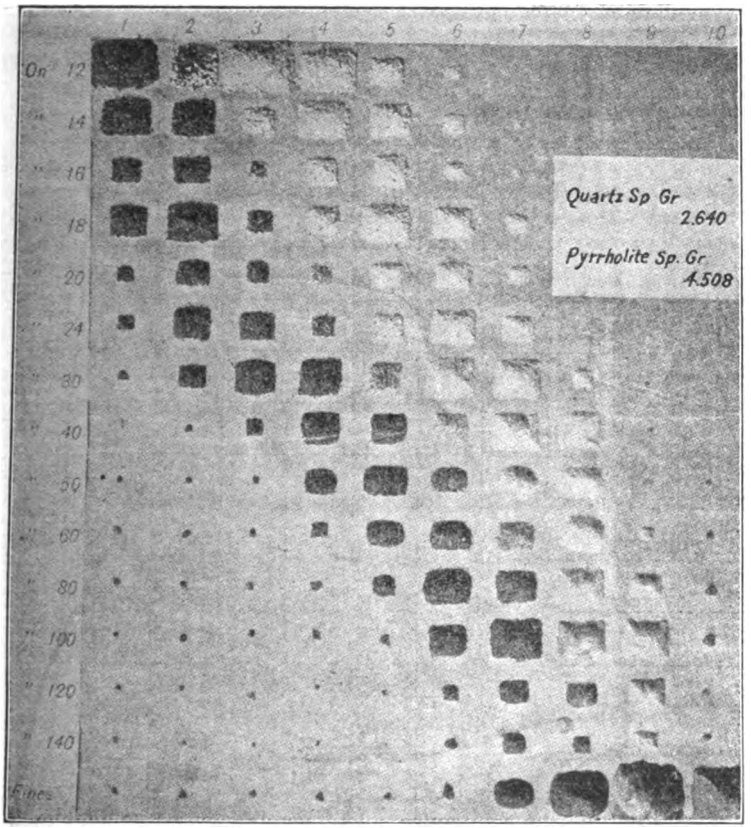

FIG. 354.—SEPARATION OF QUARTZ AND PYRRHOTITE BY TUBULAR CLASSIFIER AND SIEVES.

downward, but the largest grain of quartz cannot get below the horizon of the grain of galena which is equal settling with it under hindered settling conditions. The same is true of quartz and arsenopyrite, and of quartz and blende, but it will be noticed that the quartz is associated with a larger grain of arsenopyrite than of galena, and of blende than arsenopyrite.

The effect of hindered settling may be seen in still another way in the twelve Figs. 346 to 357. If any of these be rotated 90° left handed before the eye of the reader, it will then represent by its horizontal layers the effect of an upward current corresponding to the pulsion of a jig after it has come to equilibrium, it being understood that the grains of the two minerals of each layer are mixed together, and if we compare the figures for galena (Fig. 347), arsenopyrite (Fig. 351), and blende (Fig. 355), we see that the quartz is pushed farther away to the left in the galena figure, less far in the arsenopyrite and still less in the blende figure. This is because the quartz is in equilibrium with the grain of galena which is $\frac{1}{5.8}$ of its diameter, with the grain of arsenopyrite which is $\frac{1}{.78}$ of its diameter, and with the blende, which is $\frac{1}{2.1}$ of its diameter, respectively.

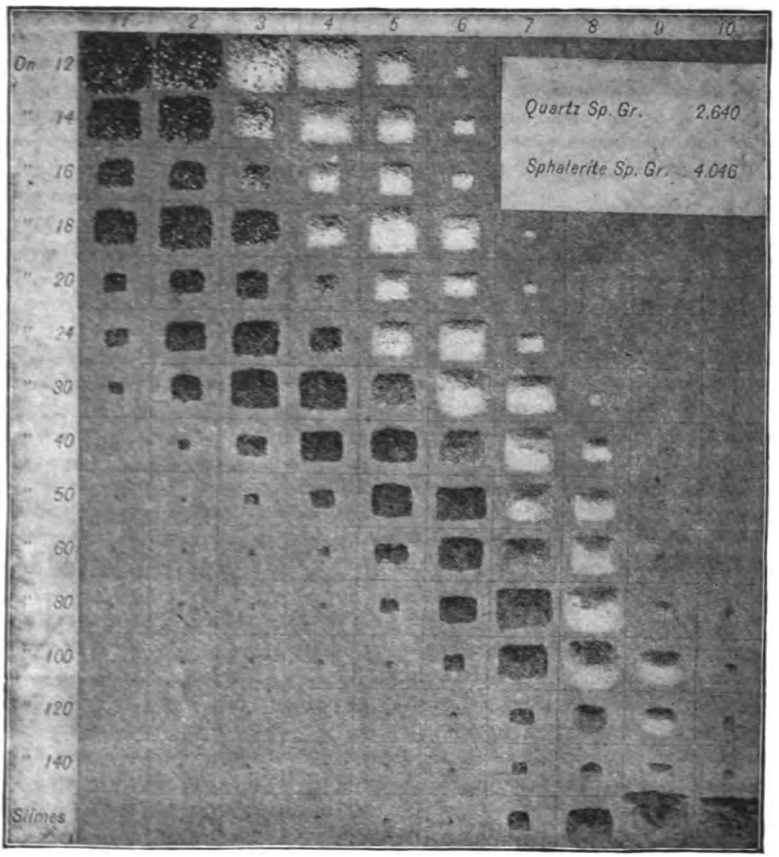

FIG. 355.—SEPARATION OF QUARTZ AND SPHALERITE BY TUBULAR CLASSIFIER AND SIEVES.

The results obtained in the tubular classifier tend to give the impression that there is a sharply defined limit between free settling and hindered settling. This is probably not true, but rather, there is a gradual transition from one to the other, that is, between the conditions which existed in the sorting tube experiments (§ 355), and the tubular classifier experiments (§ 467), there is probably a region where the diameter ratios may be between those given by the author for free settling, and those for hindered settling. This region has not yet been explored. If such is the case, it may exist in the sorting columns of some classifiers where the pulp is denser than usual.

Lest the proportions of the two minerals (equal volumes) used in the tubular classifier tests (Figs. 346 to 357), might have influenced the results, a trial test for comparison with Fig. 347 was made, using a quantity of galena equal to about $\frac{1}{10}$ of the volume of quartz, instead of equal volumes of the two minerals. The fourth, fifth and sixth bulbs were sized, and gave hills apparently at the same points as shown in Fig. 347. To demonstrate the point still further, weights and computations were made upon the fourth bulb, and yielded the ratio of the diameter of the galena particle to that of the quartz—1 : 5.966. This

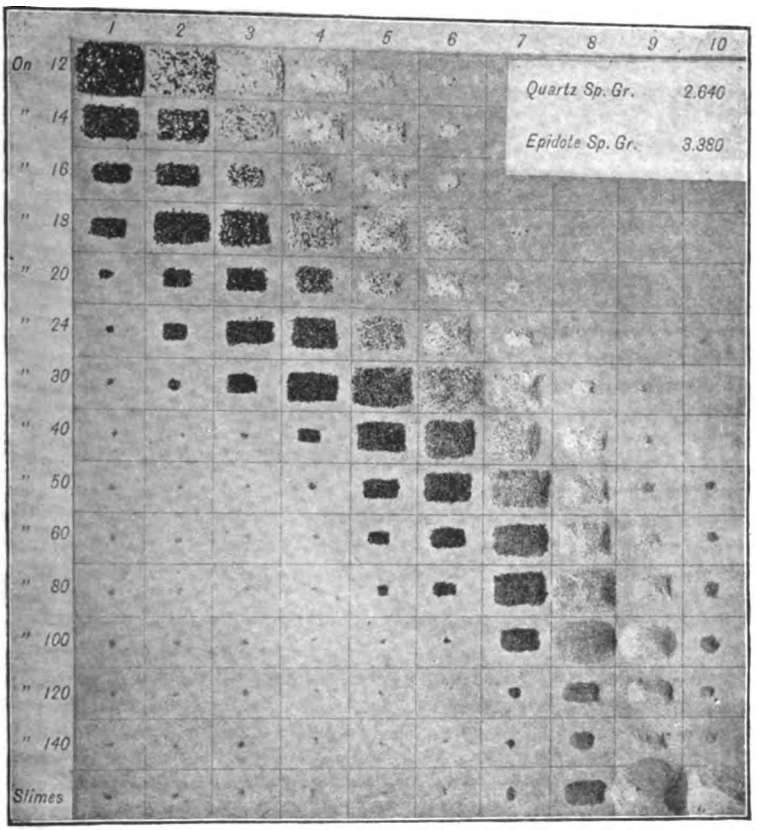

FIG. 356.—SEPARATION OF QUARTZ AND EPIDOTE BY TUBULAR CLASSIFIER AND SIEVES.

ratio is practically the same as those given in Table 307 for galena and quartz, and therefore demonstrates that the relative quantities of the two minerals have nothing to do with the law of hindered settling. The ratio of diameters is fixed.

One or two interesting facts may be noted here, although they are one side from the main thread of this discussion. In the first galena trial, a figure of which is not given here, it was found that fine galena appeared in the first bulb below 30-mesh. This may be attributed to particles abraded during the subsequent sifting operation. To test the question, the galena-quartz lot was mixed up thoroughly and run over again (see Fig. 347), and this time the fine galena, below the main range of galena hills, was much reduced, proving the conjecture to be substantially correct.

Again, the fall-velocities of these different heaps under free settling conditions, were taken in a tube (Fig. 359), designed by C. Le Neve Foster, in which, by inverting the tube, the measure may be taken over and over. The results are given in Table 308. They show that, for example, on the 20-mesh line, grains of galena in No. 1 are faster than No. 2, and No. 2 than No. 3, also for the quartz Nos. 5, 6 and 7 fall in that order, 5 being the fastest, and 7 the slowest; 5 contains the 20-mesh grains that are nearest to a cube; 7 are the flat

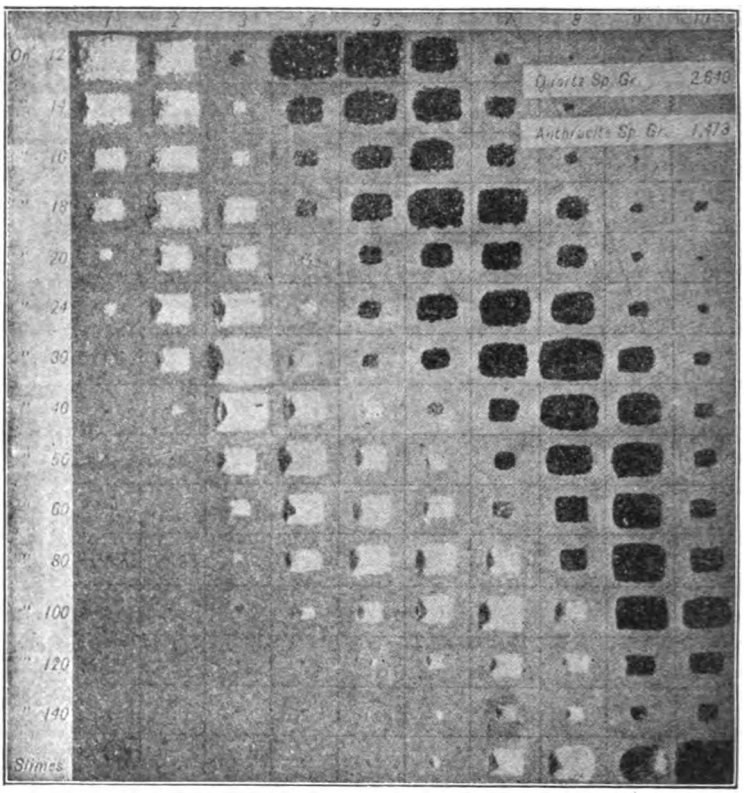

FIG. 357.—SEPARATION OF QUARTZ AND ANTHRACITE BY TUBULAR CLASSIFIER AND SIEVES.

TABLE 308.—GALENA AND QUARTZ HILLS OF FIG. 347 TESTED WITH THE FREE-FALLING TUBE (FIG. 359), FOR FALL-VELOCITIES—SERIES OF BULBS DRAWN FROM TUBULAR CLASSIFIER.

Sieve Mesh.	Series of Bulbs Drawn from Tubular Classifier.								
	1.	2.	3.	4.	5.	6.	7.	8.	9.
	Velocity in Millimeters per Second (Mean of 4 Determinations).								
On 12	390.1	361.2	.....	168.1	157.3	153.6	.....	.....	.....
" 14	336.3	330.5	.....	159.9	157.3	144.4	109.0	.....	.....
" 16	336.3	314.7	.....	138.3	146.7	132.7	108.4	.....	.....
" 18	291.1	300.0	243.8	135.5	127.5	121.9	112.1	.....	.....
" 20	282.7	278.6	209.7	.....	115.4	108.4	103.2	.....	.....
" 24	267.5	260.1	246.9	.....	106.6	101.6	99.0	86.7	.....
" 30	240.8	232.2	193.1	.....	.....	97.1	86.7	.....	.....
" 40	169.6	180.6	166.7	145.6	.....	.....	73.6	67.7	.....
" 50	.....	162.5	146.7	.....	109.6	.....	60.4	54.6	50.0
" 60	.....	.....	123.4	123.4	93.8	87.4	47.8	43.5	38.3
" 80	.....	.....	109.6	.....	88.7	76.5	.....	33.7	30.4
" 100	.....	.....	.....	76.2	76.2	63.3	53.9	26.6	21.4
" 120	.....	.....	.....	.....	66.1	61.0	62.3	.....	13.3
" 140	.....	.....	.....	.....	.....	46.9	44.2	.....	12.1
Slimes	.....	.....	.....	.....	.....	43.0	.....	.....	.....

oyster-shell-like grains, that fall much slower. In this test a group of 20 or 30 grains was timed. When the average grain passed the upper and lower marks the time was taken. The results are, therefore, averages. In the light of these facts the remarkable resemblance which was observed between these two tests of galena and quartz, the second one of which is shown in Fig. 347, becomes more interesting; for it is probable that, with certain latitude, the particles of the first test found their way back to the same identical heap in the second test. This principle of almost absolute predestination of particles for their own appointed places in ore-dressing is very important.

It will be noticed that the light color of the slimes of the 9th bulb, in Figs. 346 to 357, is almost always marked when compared with its neighbors on the right and left of it. This being a truly sorted product, the finer dark mineral hides itself beneath the coarser light mineral. This shows in all the sets except copper which had no slimes in the 10th bulb, magnetite which had almost none, and epidote the fine powder of which is extremely light colored and of which the tenth slimes are, therefore, as light as the ninth.

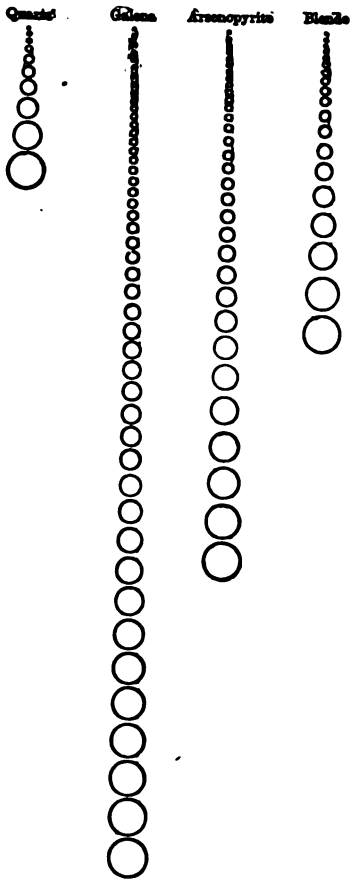

FIG. 358.—GRAPHICAL REPRESENTATION OF HINDERED SETTLING.

FIG. 359.—REVERSIBLE FREE-FALL TUBE.

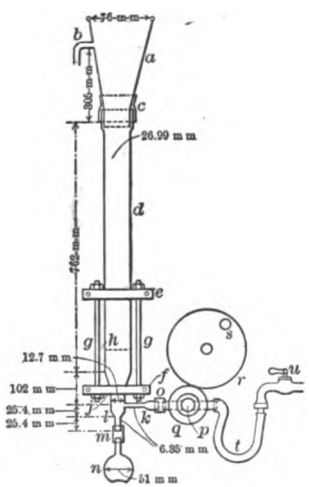

FIG. 360.—PULSION JIG.

§ 470. PULSION JIG TESTS OF HINDERED SETTLING.—Having obtained the hindered settling ratios for a continuous current, it was next necessary to ascertain if an intermittent, pulsating current would produce any variation therefrom. To test this question, a pulsion-jig was designed, which is shown in Fig. 360. It consists of a tin funnel, *a*, with overflow, *b*, connected with rubber connector, *c*, to a glass tube, *d*, cut apart at *h* for the insertion of a disc of sieve-cloth. The two parts are held together by two clamps, *e* and *f*, and two bolts, *g*, *g*, and the joint, at *h*, is made tight by a belt of rubber plaster. The tube has a branch, *k*, joined by a rubber connector, *o*, to a common plug-cock, *p*, provided with a gear-wheel, *q*, which intermeshes with a larger gear, *r*, having

a crank, *s*, turned by hand. Water is supplied through the rubber hose, *t*, and the hydrant, *u*. The lower end of the tube is drawn down to 6.35 mm. in diameter at *l*, and by rubber connector, *m*, is joined to a bulb, *n*, for receiving what passes through the sieve.

The method of operating this pulsion-jig is simply to turn on the water gently at *u*, and revolve the crank, *s*, at the speed desired. The revolution of the plug-cock, *p*, makes and breaks the water connection, and the rubber tube, *t*, is elastic enough to act as an accumulator for the instant that the water is shut off. The sand fed in at the funnel, *a*, quickly falls to the sieve, *h*, and then receives a series of intermittent upward pulsations from the movement of the water. The sand is therefore subjected to an upward current of water at one instant, which remains stagnant the next instant. These pulsations may be given at any rate up to 800 per minute.

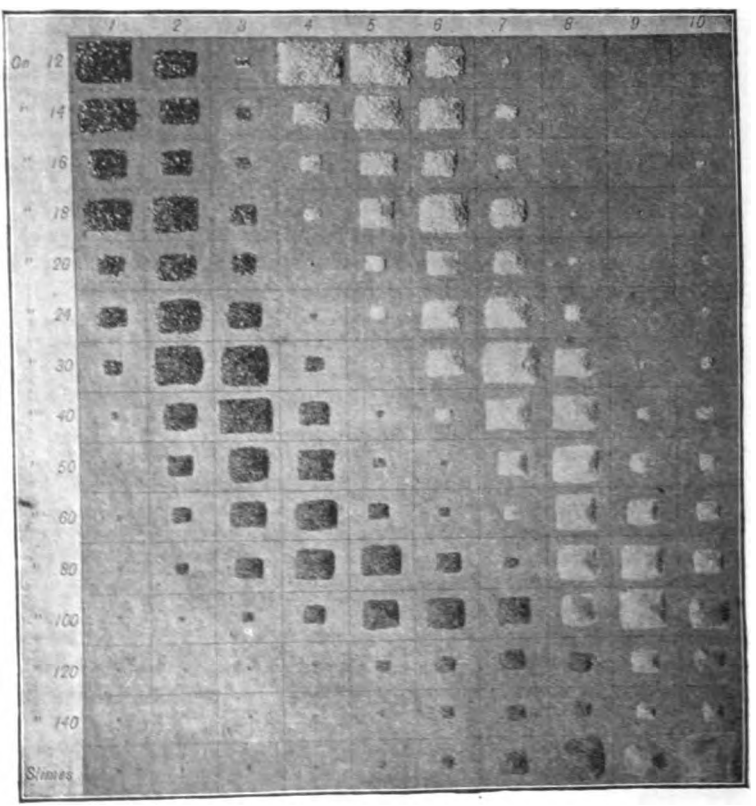

FIG. 361.—SEPARATION OF QUARTZ (SP. GR. 2.64) AND GALENA (SP. GR. 7.586) BY PULSION JIG AND SIEVES.

Two tests were made with the pulsion-jig, one upon galena and one upon sphalerite, each paired with quartz. For convenience, when in use, the sieve was removed, it having been demonstrated to the eye that the action was precisely the same whether the sieve was there or not. This permitted the products to be drawn off by the bulb in series, exactly as they were in the tubular classi-

fier test, and the products so drawn off were sized, and the different little hills were laid out and photographed as before (see Figs. 361 and 362).

The ratio for three columns of hills computed by the method adopted for the tubular classifier, yielded for the two pairs of minerals treated, ratios of diameters given in Table 309, which are practically identical with those of Table 307, obtained in the tubular classifier. It is evident, therefore, that nothing whatever has been gained by substituting intermittent pulsion for continuous current, and would seem to indicate that Rittinger was wrong in his theory that the advantage of a jig over free settling was due to the intermittent pulsion of the former, which caused the grains to have periods of acceleration during which the smaller particle of the heavy mineral came to its full velocity sooner than the larger particle of the light mineral.

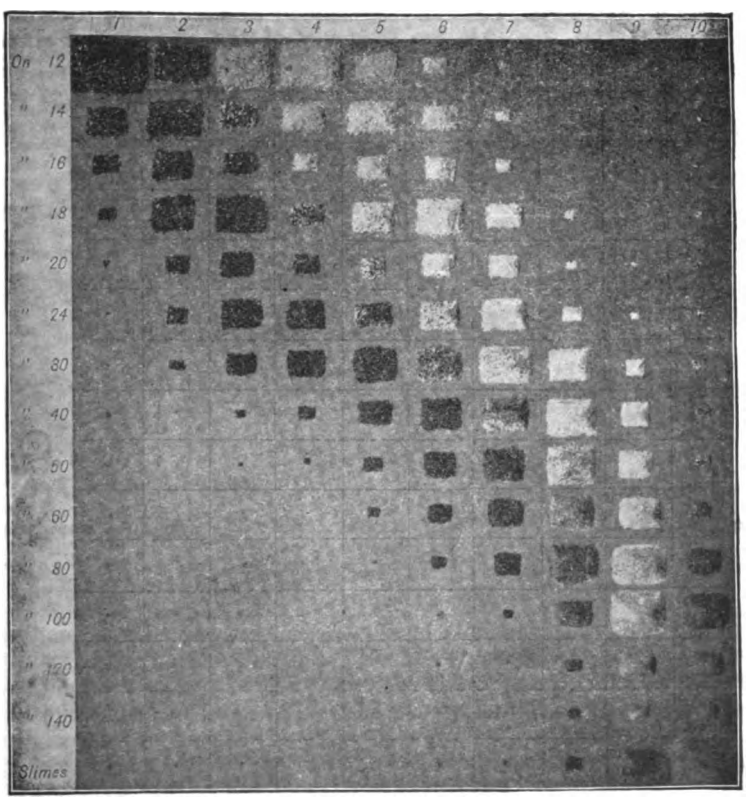

FIG. 362.—SEPARATION OF QUARTZ (SP. GR. 2.64) AND SPHALERITE (SP. GR. 4.046) BY PULSION JIG AND SIEVES.

It is interesting to notice how closely Fig. 361 for quartz and galena, and Fig. 362 for quartz and sphalerite, as obtained by the pulsion-jig, resemble Figs. 347 and 355, for the same minerals as obtained by the tubular classifier.

TABLE 309.—RATIOS OR MULTIPLIERS FOR OBTAINING THE DIAMETER OF THE PARTICLE OF QUARTZ, WHICH IN THE PULSION-JIG, WILL BE IN EQUILIBRIUM WITH THE MINERAL SPECIFIED.

Quartz with	Ratio of Average Quartz Diameter to Average Mineral Diameter.			
	Column 5.	Column 6.	Column 7.	Average.
Galena	7.161	6.103	5.074	6.113
Sphalerite	2.093	2.148	1.972	2.073

§ 471. MUNROE'S TESTS.[31]—The difference which has been found between the free settling ratio and the hindered settling ratio of any two minerals has been explained by Prof. H. S. Munroe in 1889, as due to the effect of interstitial currents.

He tested the effect of confined space upon falling particles. He timed different sizes of lead shot, or spheres, falling in a narrow glass tube filled with water (Fig. 363). If d equals the diameter of the shot, and D that of the tube, he found that the larger the fraction $\frac{d}{D}$ the greater was the retardation or loss of velocity by the shot. When this fraction equals unity, the shot stops, and on the other hand, when the fracture equals $\frac{1}{10}$ or less, then the hindering effect has practically disappeared and free settling conditions exist. He applies this principle to the question of equal-settling particles, as follows: If particles of quartz, for example, Fig. 364, are represented by the larger circles,

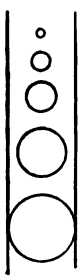

FIG. 363.—FALLING SPHERES.

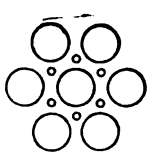

FIG. 364.—INTERSTITIAL FALL.

FIG. 365.—IMAGINARY TUBES OF INTERSTITIAL FALL.

and those of equal-settling galena by the smaller circles, then when these mixed particles are settling *en masse*, or, are held in suspension by a rising current of water, each particle may be considered to be falling in a tube, the walls of which consist of the surrounding particles. Substituting a circle in each case for the imaginary tube, we have Fig. 365, representing the conditions for galena and quartz, the outer circle representing, in each case, the imaginary tube. A glance is sufficient to show us that the fraction $\frac{d}{D}$ is much smaller for the galena particle than it is for quartz. The galena particle will, therefore, be less impeded in its fall than the quartz, and, in consequence, the particles of galena that are found adjacent to the particles of quartz will be smaller than the ratio which the law of free settling particles would indicate. Professor Munroe infers that these interstitial currents account for the fact, made use of in the mills, that a jig will save galena which is much finer than would be the case if the law of free settling particles was the only law of jigging. And he finally concludes, by equating his formulas, that the ratio of diameters for the quartz and galena, after the interstitial currents have brought the

grains to equilibrium, will be as 30:1, which, however, is much larger than the ratio of 5.8:1, obtained by the author from actual tests. In Professor Munroe's own words:

"We see, therefore, that if the material to be treated is sized between the limits of 1 mm. and 30 mm., it will be possible to separate the quartz from the galena. All the spheres of galena will have a greater falling velocity than the 1-mm. grain; all the quartz will rise more readily and fall more slowly than the 30-mm. grain."

§ 472. SUCTION, GENERAL PRINCIPLES.—This term is used to define the period when a water current is passing down through the sand resting on the sieve of a jig. This down current will carry with it any particle that is small enough to pass through the interstices between the larger grains; but the arrangement which these grains have derived from the previous pulsion (see § 470), exercises a controlling effect upon the work that suction is to do.

It has been shown already that the higher its specific gravity, the smaller will be the diameter of a grain of mineral which, under hindered settling conditions during pulsion, is adjacent to and in equilibrium with any given grain of quartz (compare galena with blende in Fig. 358), and therefore the easier will the former pass down through the interstices between its associated quartz grains, when the suction of a downward current begins to act upon it.

Carrying this line of argument still further, one sees that if it can be proved that the size of the interstices between the quartz grains bears a certain definite ratio to the diameter of the quartz, in fact that there is a definite interstitial ratio, then as a consequence, the heavy minerals can at once be divided into two groups, according to their behavior under suction: (1) Those higher gravity minerals, the diameter of which under hindered settling conditions is smaller than the interstices between the adjacent quartz grains. (2) Those lower gravity minerals, the diameter of which under hindered settling conditions is larger than the interstices between the adjacent quartz grains; or, in other words, those minerals the hindered settling ratios of which is (1) greater than, and (2) less than the interstitial ratio of quartz. The minerals of the first group will be easily sucked down by the descending current and pass through the jig sieve into the hutch below. The minerals of the second group will be more difficultly drawn down.

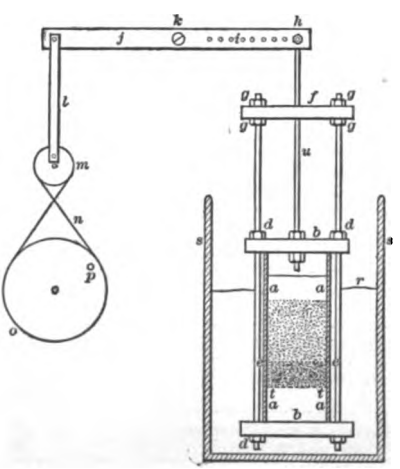

FIG. 366.—MOVABLE SIEVE JIG.

§ 473. THE AUTHOR'S TESTS ON SUCTION.—In order to throw light upon the relation of the hindered settling ratio to the interstitial ratio, and to bring out any other facts which might come to light, a little, movable sieve jig shown in Fig. 366, was designed. It consists of a glass tube, *a,a,a,a,* 127 mm. long, 32 mm. in bore, which is cut at *t,t,* into two parts, 102 mm. and 25.4 mm. long respectively —the 102 mm. being above the sieve; a disc of sieve-cloth, *t,t,* is inserted between them; the parts are held together by the wooden bars *b,b,* and the bolts, *e,e,* with nuts, *d,d.* Power is transmitted through the rod, *h,u,* the beam, *j,* oscillating upon a pivot, *k,* a connecting-rod, *l,* a small pulley, *m,* with crank-pin, a belt, *n,* and a large pulley, *o,* driven by a crank, *p.* The cross-bar, *f,* and the lock-nuts, *g,g,* are used simply to stiffen the rod, *u.* The

jig is suspended in a glass jar, *s*, with water level at *r*. By turning the crank, *p*, an oscillating motion up and down is given to *l*, received by *u*, and transmitted to the jig-sieve, *t,t*. The amount of oscillation may be controlled by connecting *u* with *j*, by means of any of the holes, *i*. The smallest oscillation was 3.2 mm., the largest, 15.9 mm. The latter was preferred for the tests.

By means of this jig and of the pulsion jig (Fig. 360), already described, the effects of pulsion and suction were studied in three different combinations, namely, pulsion with much, with little, and with no suction.

1. *Pulsion with Much Suction.*—When the jig (Fig. 366), is run with the glass tube elevated 38.1 mm. above the surface of the water at the lowest point of its stroke, the jig operates during the first few pulsions as a lift-pump, elevating the surface of the water within its tube until the inside water-level is, perhaps, 25.4 mm. above the outside level, the sand-particles acting like so many little valves. Thus it reaches equilibrium, and, from this time on, the suction due to the downward rush of water must be equal to the pulsion due to the upward rush of water. The whole bed of the jig so run is tight and only slightly mobile. The strong suction compacts it more or less. Mobility may be partially restored by using a long stroke.

2. *Pulsion with Little Suction.*—When the jig (Fig. 366), is run with the glass tube inundated to a depth of 22.2 mm. below the surface of the water at the lowest point in its stroke, then, during the downward movement of the sieve, a full pulsion movement is given to the water as it passes up through the sieve, and the sand settles through it. But, on the upward movement of the sieve, the sand settles in the sieve, and comparatively little suction results from the inertia of the water. The reason is, that there is a free discharge of the water at the top of the glass tube. Here we have pulsion with little suction. The whole bed of the jig run in this way is loose and very mobile. There is not enough suction to compact it. A shorter stroke suffices for mobility than in the case of much suction.

3. *Pulsion with no Suction.*—When the pulsion jig (Fig. 360), is used upon mixed sands, it matters not whether we revolve the cock rapidly, giving rapid, small pulsions with short intervals of repose, or, more slowly, giving fewer and stronger pulsations with longer periods of repose—the result is the same. The sands are treated by pulsion without suction. The whole bed of this jig is extremely loose and mobile, there being no suction to compact it.

TABLE 310.—JIGGING QUARTZ AND SPHALERITE (BLENDE).

Diameter of quartz in mm. Diameter of blende in mm.	1.735 1.735	1.735 1.090	1.735 0.665	1.735 0.495	1.735 0.241	1.735 0.107
Series 1, with much Suction.						
Pulsions needed for separation Percent of blende brought down	2,129 96	1,676 95	1,759 95	297 95	208 99	288 99
Series 2, with little Suction.						
Pulsions needed for separation Percent of blende brought down	306 99	838 99	846 100	1,382 98	1,729 97	Infinity (a) 0
Series 3, with no Suction.						
Pulsions needed for separation Percent of blende brought down	147 98	202 95	496 (c) 50	Infinity (b) 0	Infinity (b) 0	Infinity (b) 0

(a) The sphalerite all floated up. (b) Not tried; the sphalerite would undoubtedly have nearly if not quite all floated up. (c) No more would come down.

In all the tests upon jigging now to be described, unless otherwise stated, the stroke of the jig was 15.9 mm.; the layer of quartz was 51 mm. thick; the layer of the added mineral to be separated from the quartz, was 4.76 mm. deep,

and placed on top of the quartz. A 16-mesh sieve was used in the jig throughout the tests. The rate of the pulsations varied somewhat, as will be seen by reference to the original paper,[38] but the mean was a little over 300 per minute. In each test, the number of pulsations necessary to settle the heavy mineral was counted, and the percentage of the latter settled was estimated by the eye. These last two values served for comparing the tests. A high number of pulsions indicates difficult separation; a low number indicates easy separation.

A series of tests was made with quartz and blende, to note the behavior of six different sizes of blende, paired one at a time with a standard size of quartz, under conditions of much suction, of little suction and of no suction. The results are given in Table 310.

§ 474. On examination of these results, one sees first, that much suction gives very difficult separation on the three coarser sizes of blende, and very easy on the three finer sizes. There is, in fact, an extraordinary break between the two diameters of blende, 0.665 mm. and 0.495 mm. To what does this point? Clearly the 0.495-mm. grain is fine enough to be rapidly drawn down through the interstices, while 0.665 mm. is not. The author considers that this measures approximately the size of the interstices in quartz of 1.735-mm. diameter to be 0.495 mm., showing the quartz grains to be $\frac{1.735}{0.495}=3.50$ times as large as the interstices between them. That is, the interstitial ratio of the quartz is 3.50.

The reader may well say here that there is nothing to indicate that grains of blende between 0.495 mm. and 0.665 mm. will not be readily sucked down between grains of quartz 1.735 mm. diameter and consequently that the figure 3.50 may be too large. Time was not available to answer this question, and rather than to make any assumption, the author prefers to consider 3.50 as the interstitial factor. An indication that it may be too large is found in § 430, where the study of actual mill factors shows an average of 2.9.

Secondly, with no suction, the first two sizes of blende show easy jigging, while the last four make little or no separation.

Thirdly, little suction is much like no suction, differing from it only in the fact that on the coarse grains, jigging is not quite so easy, and on the fine grains, jigging is not quite so difficult.

A similar series of tests was made upon quartz and galena, to note the behavior of six different sizes of galena paired, one at a time, with a standard size of quartz. The results are given in Table 311.

TABLE 311.—JIGGING QUARTZ AND GALENA.

Diameter of quartz in mm....	1.735	1.735	1.735	1.735	1.735	1.735
Diameter of galena in mm....	1.735	1.090	0.665	0.495	0.241	0.107
Series 1, with much Suction.						
Pulsions needed for separation	257	302	748	337	190	86
Percent of galena brought down	100	100	98	99	100	100
Series 2, with little Suction.						
Pulsions needed for separation.....	95	384	153	210	153	354
Percent of galena brought down.....	100	100	98	99	100	(a)
Series 3, with no Suction.						
Pulsions needed for separation.....	18	50	58	368	368	Infinity.
Percent of galena brought down	100	100	98	95	(a) 60	(b)

(a) The more cubical grains apparently went down and the flatter grains floated up. (b) Not tried as the galena would undoubtedly have all floated up.

On examination of these results, one sees that galena is of such high specific gravity and the separation takes place so easily that the rules laid down above do not apply with the same force as with the blende set, but yet they sufficiently

corroborate those rules to let them stand for heavy as well as for light minerals. We notice little suction is everywhere superior to much suction, except on the very finest size, where much suction is more rapid and more effective. No suction is extraordinarily rapid on the three coarse sizes, but falls away on the fourth, and breaks down entirely on the two finest sizes.

The author also found that by jigging with much suction, small grains of quartz (0.495 mm. and less), can be drawn down through the interstices between large grains (1.735 mm.), of the same mineral while jigging with no suction forces them up to the top of the bed.

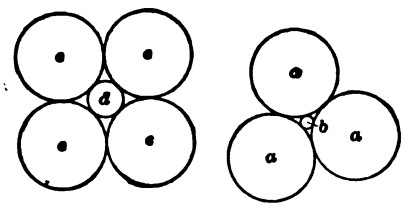

FIG. 367.

The author, in considering the interstitial ratio, sought some geometrical representation to picture the small grain of concentrates passing through interstices between the large grains of quartz. In Fig. 367 the diameters of the spheres of quartz *a a a*, will be 6.50 times that of the ore, *b*, when the ore can slip between the quartz, while the diameters of the quartz spheres, *c c c c*, will be only 2.44 times that of the ore, *d*. The interstitial ratio obtained for quartz, 3.50, makes the space smaller than *d*, but larger than *b*.

§ 475. HOPPE'S TESTS ON SUCTION.—Hoppe[139] proved the effect of suction by experimenting upon a full sized jig at an earlier date, though the fact was unknown to the author when making his experiments, as follows:

His jig had 92 throws per minute of 60 mm. each and a 3-mm. screen; on this screen he placed a bed of calcite, 35 mm. thick, composed of grains that had passed through an 18-mm. hole and rested on a 13-mm. hole and on the top of this another layer of 3-mm. calcite 35 mm. thick. On starting the jig, the whole of the 3-mm. calcite vanished at the first stroke and after a short time it had mostly passed through the sieve into the hutch. A second experiment was made, using 5-mm. calcite instead of 3-mm. for a top layer. This became mixed only gradually with the coarse bottom layer, so that at the end of the jigging the two layers were pretty uniformly mixed, with the 5-mm. particles perhaps slightly in excess near the top. Next, using a throw of 38 mm. and a 2-mm. screen, he put on a lower layer 50 mm. thick, consisting of a mixture of 13- to 18-mm. calcite, of 5-mm. calcite and of 3-mm. calcite. Upon this he placed some more of this mixture of calcite to which had been added a mixture of similar sizes of galena. After 100 strokes or about a minute, the minerals were perfectly separated into two layers, and each layer had perhaps more coarser grains below and finer grains above.

His final experiment was similar to the last, except that a mixture of all the unfinished products of the mill from 18 mm. downward, was added to the top layer. After 100 strokes, he found the galena completely below; the blende and other middle products between, and the calcite above. He concludes that this would seem to call for a roughing jig without preliminary sizing or classification.

Hoppe's work shows that 3-mm. calcite can be sucked down freely through 13- to 18-mm. calcite, while 5-mm. calcite cannot. Looking for the cause, we find the mean of 13 and 18 mm. is 15.5 mm. and the diameter ratios will be respectively for 3- and 5-mm. grains $\frac{15.5}{3}=5.2$ and $\frac{15.5}{5}=3.1$. The 3-mm. particle has, therefore, a larger diameter ratio than the author's interstitial ratio (3.5), while the 5-mm. has a smaller ratio, and therefore, should not be sucked down easily.

§ 476. AUTHOR'S TESTS ON JIGGING MIXED SIZES.—The author tried jigging mixed sizes through 10 mesh, of each of the twelve minerals of Table 257, paired

with quartz. The tailings were in every case separated from the heads, and sized on the nest of sieves (Table 258), and the per cent. of the heavy mineral estimated by the eye in every one of the sizes. Tables of the results[38] from much suction, little suction and no suction, gave an idea of whether the mineral jigged easily or not from this point of view.

The results of much suction, arranged in tabular form, showed that the tailings from jigging minerals heavier than arsenopyrite were decidedly better than the tailings from jigging that mineral, while the tailings from jigging lighter minerals were very little worse. The author is inclined, therefore, to draw the line between easy and difficult jigging at arsenopyrite. The hindered settling ratio of this mineral, with respect to quartz, is 3.7, and this would make the interstitial ratio of the quartz equal that amount, which is a little above 3.50, the interstitial ratio previously deduced in § 474. This interstitial ratio will vary somewhat with the fracture of the quartz and also of the heavy mineral, since it is measured practically by the ease with which the small particles of the latter pass through the interstices of the quartz.

It is clear that suction ratios (similar to hindered settling ratios, or interstitial ratios) which shall represent the ratio of the diameters of particles of two different minerals which are in equilibrium under the effect of suction, cannot be made, owing to the fact that the ratio is a variable under varying conditions. The only thing that can be said is that suction ratios will be much larger than hindered settling ratios.

§ 477. Final Conclusions.—To sum up all of the preceding tests on hindered settling and suction, they clearly point to the following rules of jigging:

(1) For jigging closely sized products, to get the highest speed of separation, use as little suction as the water supply will permit.

(2) For jigging classified products where the hindered settling ratio is equal to or larger than the interstitial ratio, or in other words, where the concentrates are smaller than the interstices between the grains of the gangue, use suction.

(3) For jigging classified products where the hindered settling ratio is less than the interstitial ratio, or in other words, where the concentrates are larger than the interestices between the grains of gangue, use suction.

(4) For jigging mixed sizes and gravities, natural products, or products not closely sized, suction is suitable, as no suction fails to save the finer sizes.

The amount of suction required in each case must be studied out upon the spot. In general, No. 3 will probably require a little less suction than No. 4, and No. 4 a little less than No. 2. In this connection see § 455 in regard to the effect of suction in hardening the whole bed.

The degree of sizing needed as preparation for jigging, if we are looking for the most perfect work, depends solely upon the hindered settling ratio of the minerals to be separated. If the ratio is above 3.5 (assuming this value to be sufficiently proved), then sizing is simply a matter of convenience. The fine slimes, should, of course, be removed; and, if it is more convenient to send egg-size, nut-size, pea-size and sand-size, each to its own jig, the suitable screens should be provided for this purpose, and a hydraulic separator for grading the finer sizes. But if, on the other hand, the ratio is below 3.5, then the jigging of mixed sizes cannot give perfectly clean work, and the separation will be approximate only. To effect the most perfect separation, close sizing must be adopted, and the closer the sizes are to each other, the more rapid and perfect will the jigging be. There may be conditions where the jigging of mixed sizes of this class will be considered sufficiently satisfactory, as an expedient, under the circumstances.

In the light of the foregoing work, it is not possible, owing to the variable effect of suction, to calculate, theoretically, sieve scales which depend upon the

difference in specific gravity of minerals to be separated, that is, it is not possible to give an exact range of sizes within which separation is easy and beyond which separation is difficult.

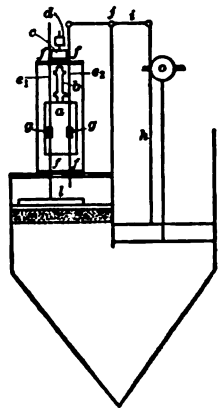

FIG. 368.—JIG INDICATOR.

§ 478. PULSION AND SUCTION INVESTIGATED IN THE MILLS.—To investigate still further the laws of pulsion and suction upon jigs in action, a jig indicator was designed and tests of jigs made in a number of mills. The indicator (see Fig. 368), consists of a cylinder, *a*, of brass 203 mm. long, 152 mm. diameter, with its axis vertical, suspended from and continuous with a bicycle ball bearing, *b*, to eliminate friction. The cylinder is rotated by clock-work, *c*, with a wind-wheel escapement, *d*, and can be made to revolve from 3 to 25 times per minute, according to the size of the wind-wheel. Upon the surface of the cylinder is wrapped a piece of paper, 203 mm. wide and 508 mm. long, upon which the curves are drawn. Two vertical recording rods, e_1,e_2, running in anti--friction roller-guides, *ffff*, with pencils, *g g*, attached, and provided with devices for throwing them into gear and out of gear, serve to record vertical motion upon the paper. The abscissa of the curve represents time, the ordinate represents movement up and down. The curve of the plunger is obtained by a vertical rod, *h*, held down on the top of the plunger and transmitting the oscillations of the latter by a horizontal beam, *i*, oscillating upon its center point, *j*, as a pivot to one of the recording rods, e_2. When the plunger moves down, its pencil records an upward motion, and *vice versa*. To get the curve of the surface of the water, a slab of cork, *l*, 254 mm. square and 25 mm. thick, is floated upon it and attached to the other recording rod, e_1, direct. Here the motion of the pencil is the same as that of the water. The curve of the top layer of quartz sand is obtained by placing on the sand a piece of sieve-cloth a little finer in mesh than the grains of quartz. This pulsates up and down with the sand, and when connected to one of the recording rods, e_1, gives the curve of the quartz. The curve of the ore bed which underlies the quartz may be obtained by sinking the piece of sieve-cloth to the desired depth and attaching it to the recording-arm, e_1.

Four curves are thus obtained: that of the plunger, marked *P* on the diagrams; that of the water, marked *W;* that of the quartz or rock, marked *R;* and that of the ore bed, marked *O*. The diagrams are shown in Figs. 369 to 380 inclusive, all of which are drawn to scale.

In the actual performance of the tests two curves only are taken at a time, namely: those of the plunger and the water; those of the plunger and the quartz or rock; and, finally, those of the plunger and the ore bed. The diagrams have been constructed by combining these curves. In this operation it was necessary to have some standard by which, for example, the rock curve and the ore curve could be superposed upon the water curve. Such a standard was found in the parallel plunger curves that went with each. Again, the superposed curves would often come longer or shorter than the water curve. In that case a new curve was sketched, making the deviation on the abscissa proportional to the distance from the starting point.

The curves here recorded were taken upon two classes of jigs only, namely, those with accelerated pulsion and retarded suction, and those with equal pulsion and suction.

Observations were made upon forty-one jigs, of which curves from twelve are here given in Figs. 369 to 380. In studying the curves one sees at once the difference between the water curves of the plain eccentric jigs (Figs. 369 to 373),

and of the accelerated jigs (Figs. 374 to 380). The former give a nearly symmetrical curve, while the latter give a much steeper slope on the pulsion side than on the suction side. One sees also that the plunger, *P*, moves more than the water, *W*, and *W* more than the gangue, *R*, and finally, that the heavy concentrates, *O*, move the least of all, and since motions are less, the velocities are

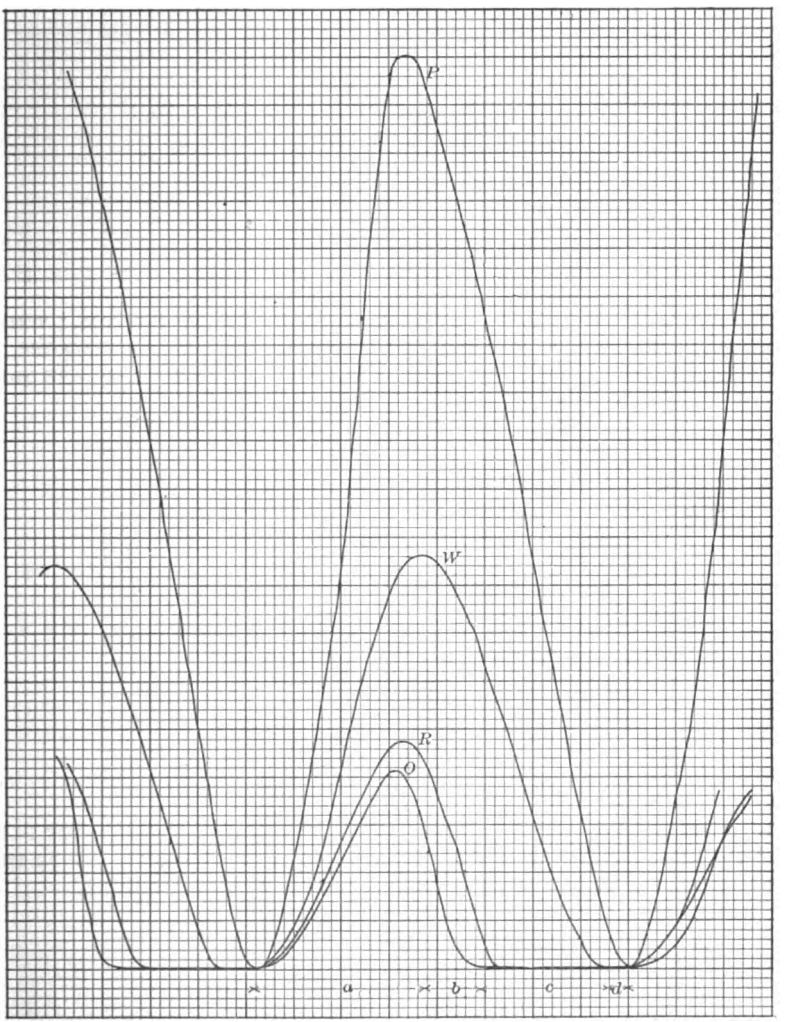

FIG. 369.—MILL 39, JIG NO. 1. SIZE OF GRAINS, 54 TO 38 MM.; THROW OF PLUNGER, 4¾ INCHES; THROWS PER MINUTE, 140; AREA OF PLUNGER, 24×48 INCHES; AREA OF SIEVE, 24×48 INCHES; SIEVE, 9.5 MM. ROUND HOLE.

less. The objection which has been advanced against the Harz jig, that it has an accelerated velocity up to mid-stroke, and then a retarded velocity to the end, is shown to be of slight account. The curves also show how much of the motion of the plunger is imparted to the water, the remainder being lost, owing to the

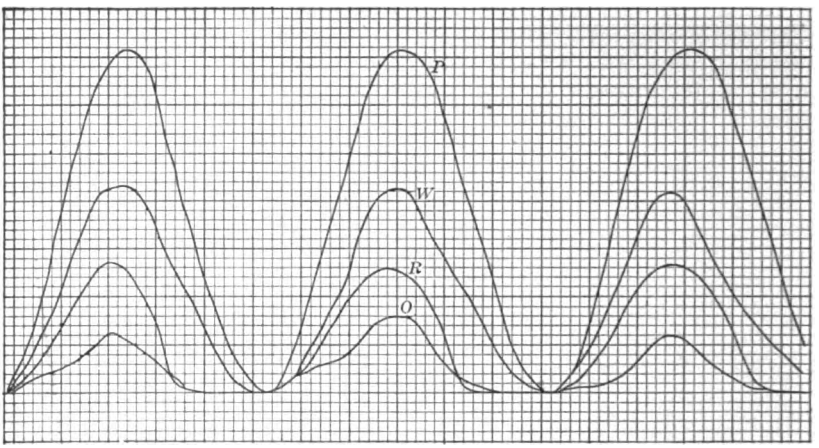

FIG. 370.—MILL 38, JIG NO. 2. SIZE OF GRAINS, 22.2 TO 9.5 MM.; THROW OF PLUNGER, 1.77 INCHES; THROWS PER MINUTE, 174; AREA OF PLUNGER, 24×36 INCHES; AREA OF SIEVE, 24×36 INCHES; SIEVE, 7.94 MM. SQUARE HOLE.

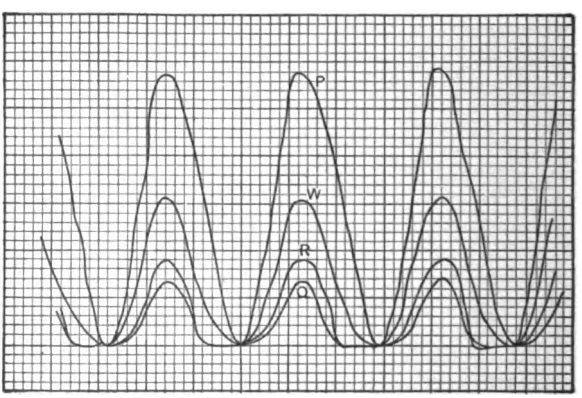

FIG. 371.—MILL 30, JIG NO. 4. SIZE OF GRAINS, 7 TO 5 MM.; THROW OF PLUNGER, 1.25 INCHES; THROWS PER MINUTE, 150; AREA OF PLUNGER, 17×32 INCHES; AREA OF SIEVE, 15×30 INCHES; SIEVE, 0.89 MM. SQUARE HOLE.

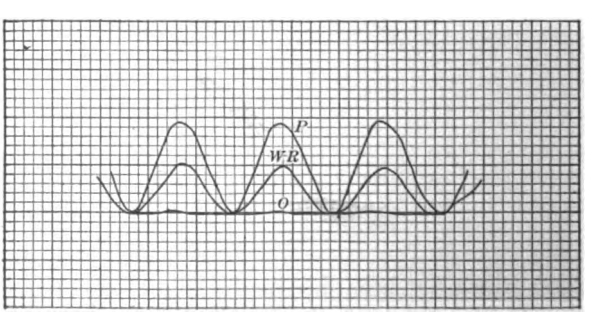

FIG. 372.—MILL 39, JIG NO. 7. SIZE OF GRAINS (3D SPIGOT OF CLASSIFIER), 4½ MM. TO 0. THROW OF PLUNGER, 0.47 INCH; THROWS PER MINUTE, 200; AREA OF PLUNGER, 15×31 INCHES; AREA OF SIEVE, 15×31 INCHES; SIEVE, 1.52 MM. SQUARE HOLE.

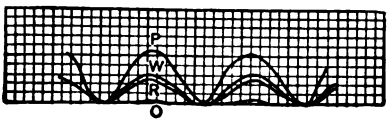

FIG. 373.—MILL 39, JIG NO. 8. SIZE OF GRAINS (4TH SPIGOT OF CLASSIFIER), 4½ MM. TO 0; THROW OF PLUNGER, 0.28 INCH; THROWS PER MINUTE, 210; AREA OF PLUNGER, 15×31 INCHES; AREA OF SIEVE, 15×31 INCHES; SIEVE, 1.04 MM. SQUARE HOLE.

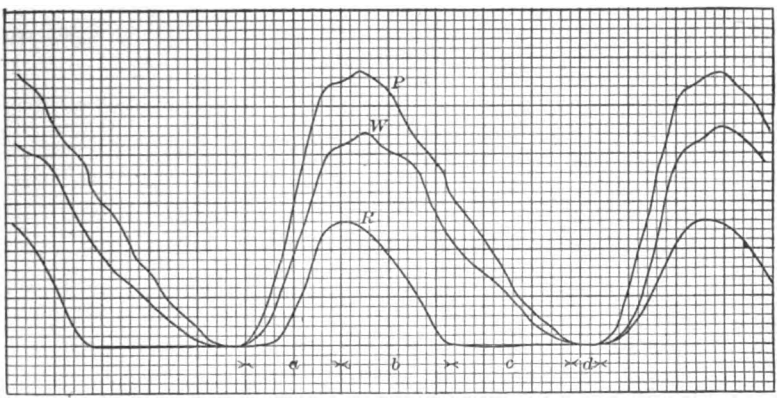

FIG. 374.—MILL 28, JIG NO. 3. CRANK-ARM ACCELERATED JIG; SIZE OF GRAINS, 16 TO 12 MM.; THROW OF PLUNGER, 1.42 INCHES; THROWS PER MINUTE, 121; AREA OF PLUNGER, 18×25 INCHES; AREA OF SIEVE, 18×29 INCHES; SIEVE, 4.75 MM. SQUARE HOLE.

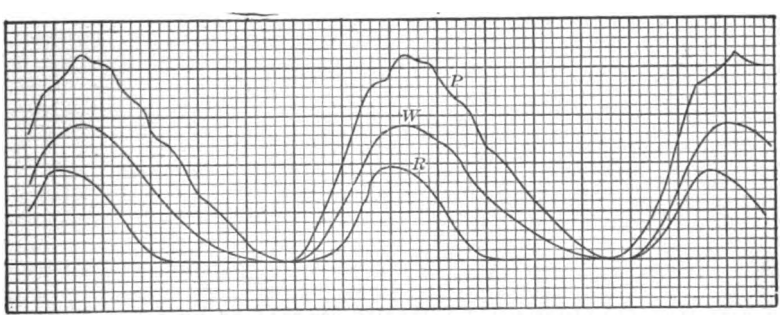

FIG. 375.—MILL 28, JIG NO. 6. CRANK-ARM ACCELERATED JIG; SIZE OF GRAINS, 5 TO 3½ MM.; THROW OF PLUNGER, 1.07 INCHES; THROWS PER MINUTE, 138; AREA OF PLUNGER, 18×25 INCHES; AREA OF SIEVE, 18×29 INCHES; SIEVE, 1.04 MM. SQUARE HOLE.

clearance of the plunger, and the frictional resistance of the screen, the bed, and the water passages.

Features of strong resemblance run through all the figures. If, for example, we refer to Figs. 369 and 374, we see that the cycle naturally divides itself into

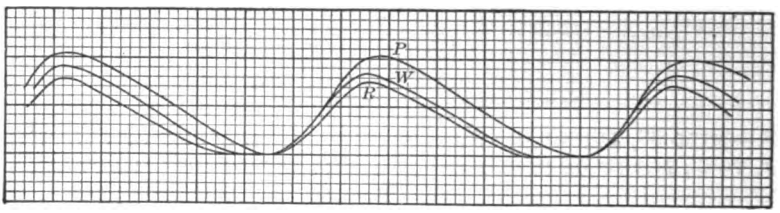

FIG. 376.—MILL 28, JIG NO. 9. CRANK-ARM ACCELERATED JIG; SIZE OF GRAINS (1ST SPIGOT OF CLASSIFIER), 2 MM. TO 0; THROW OF PLUNGER, 0.51 INCH; THROWS PER MINUTE, 135; AREA OF PLUNGER, 18×29 INCHES; AREA OF SIEVE, 18×25 INCHES; SIEVE, 3.18 SQUARE HOLE.

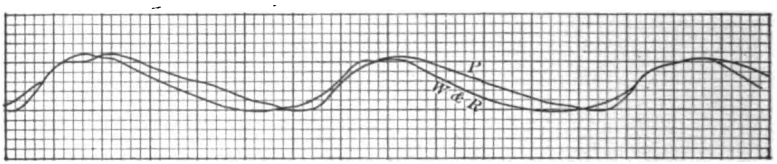

FIG. 377.—MILL 28, JIG NO. 12. CRANK-ARM ACCELERATED JIG; SIZE OF GRAINS (4TH SPIGOT OF CLASSIFIER), 2 MM. TO 0; THROW OF PLUNGER, 0.27 INCH; THROWS PER MINUTE, 180; AREA OF PLUNGER, 18×29 INCHES; AREA OF SIEVE, 18×25 INCHES; SIEVE, 1.04 MM. SQUARE HOLE.

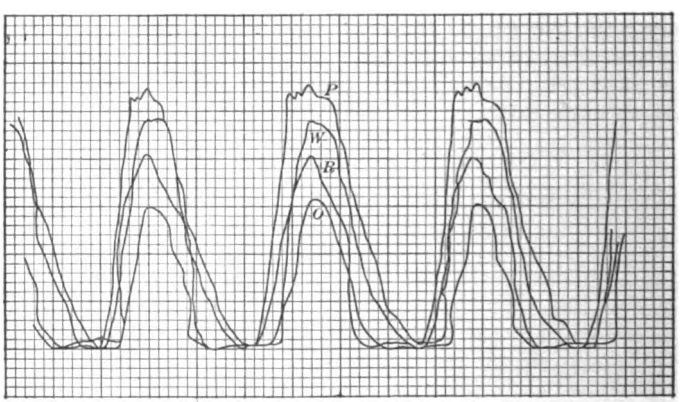

FIG. 378.—MILL 27, JIG NO. 5. CRANK-ARM ACCELERATED JIG; SIZE OF GRAINS, 10.3 TO 8.3 MM.; THROW OF PLUNGER, 1.38 INCHES; THROWS PER MINUTE, 130; AREA OF PLUNGER, $17\frac{3}{4}\times24\frac{3}{4}$ INCHES; AREA OF SIEVE, 16×23 INCHES; SIEVE, 1.57 MM. SQUARE HOLE.

four periods: the first, *a*, is pulsion; the second, *b*, is the return of the heavy concentrates to the sieve; the third, *c*, is the period of suction; and the fourth, *d*, is the period of idleness.

In regard to the period, *a*, the diverging of the lines shows that the gangue is rising more slowly than the water, and the concentrates more slowly than the gangue. The effect is the same as if the mineral particles are settling in water in a mass. It is clear therefore that the particles are being treated throughout this period according to the law of hindered settling.

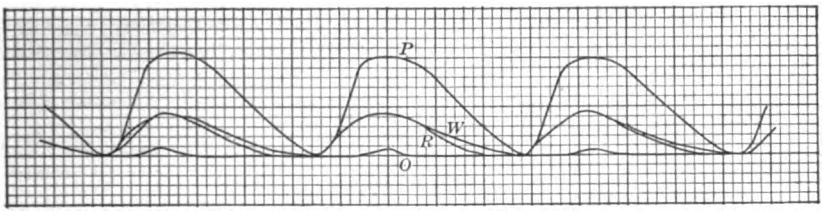

FIG. 379.—MILL 44, JIG NO. 2. COLLOM ACCELERATED HAMMER-DRIVEN SPRING-RETURN JIG; SIZE OF GRAINS (1ST SPIGOT OF CLASSIFIER, SECOND SIEVE OF JIG) 4.76 MM. TO 0; THROW OF PLUNGER, 0.51 INCH; THROWS PER MINUTE, 134; AREA OF PLUNGER, 22×17 INCHES; AREA OF SIEVE, 22×32 INCHES; SIEVE, 1.73 MM. SQUARE HOLE.

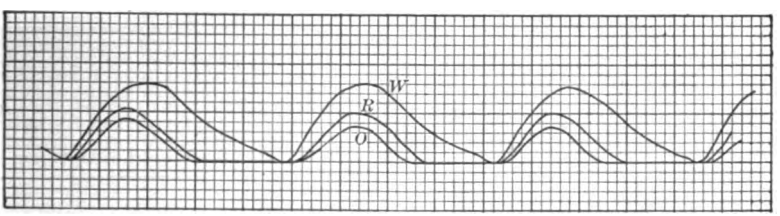

FIG. 380.—MILL 42, JIG NO. 2. COLLOM ACCELERATED HAMMER-DRIVEN SPRING-RETURN JIG; SAND (1ST SPIGOT OF CLASSIFIER), HAS BEEN THROUGH A SCREEN WITH 4.76×9.25 MM. SLOTS; THROW OF PLUNGER, 1 INCH; THROWS PER MINUTE, 130; AREA OF PLUNGER, 22×17 INCHES; AREA OF SIEVE, 22×34 INCHES; SIEVE, 8-MESH SQUARE HOLE.

In regard to the period, *b*, the lines are all nearly parallel. In some of the figures they indicate that the water at first moves downward slightly more rapidly than the gangue and concentrates, but that later, the gangue and concentrates catch up and move down a little faster than the water. Rittinger's acceleration may be taking place, together with suction during the first portion of this period while in the second portion, hindered settling is again at work.

The period, *c*, is that in which the main work of suction takes place. It is here that the water passes down through the interstices, not only between the grains of coarse concentrates, but also between the grains of gangue, so that any small particles of heavy mineral which were left by pulsion in equilibrium and adjacent to large particles of gangue, are sucked down through the interstices toward the hutch, more or less rapidly, according as they are of smaller or larger diameter compared with the gangue particles.

d, is a period of idleness which occurs on some jigs but not on others. If very short, it is due to the slowing down of the plunger at the end of the stroke. If longer, it is due to the disappearance of the water below the surface of the bed. In this case, suction may still be going on at the bottom of the bed.

In Table 312, the velocity of the water during pulsion and the percentage of the whole time of a stroke which is spent in each of the four periods, have been computed from the curves. The figures on percentages show more or less irregularity, due partly to irregularities in the curves, partly to the varying amounts of hydraulic water used, and partly to difficulties in estimating accurately the length of each period, so that no results are to be obtained from comparing individual figures. By taking averages for each of the two classes, how-

TABLE 312.—MEASUREMENTS OF JIGS AND CURVES.

Abbreviations.—h.=hutch of; hy. cl.=hydraulic classifier; In.—Inches; No.=Number; Ov.=Oversize of; Sec.=Seconds; sp.=spigot of; tr.=trommel.

Mill No.	Jig No.	Product Fed.	Area of Sieve in the Clear.	Size of Sieve Holes.	Length of Strokes.	Strokes per Minute.	Time of One Stroke.	Velocity of Water (a)	Percentage of Stroke for Pulsion.	Return.	Suction.	Idleness.
		Plain Eccentric Jigs.										
			Inches.	Mm.	In.		Sec.	In.				
20	1	Ov. No. 3 tr., 6.4 to 3.7 mm....	17x30	6.4	0.65	240	0.250	3.32	43.07	20.63	30.23	6.07
	4	Sp. No. 1 hy. cl., 1.5 mm. to 0...	17x30	1.52	0.19	400	0.150	2.24	45.7	25.5	11.60	17.2
27	9	1st sp. No. 1 hy. cl., 3 mm. to 0.	16x24	0.89	0.25	198	0.308	.....	33.93	22.13	30.43	13.58
30	4	From No. 2 trommel, 7 to 5 mm	16x28	0.89	1.44	150	0.400	4.88	44.77	30.57	22.43	2.23
	6	1st sp. No. 1 hy. cl., 3 mm. to 0.	18x32	1.07	0.66	162	0.370	4.09	42.37	44.07	13.6	0.0
38	1	Ov. No. 2 tr., 38 1 to 22.2 mm..	21½x42	7.94	2.60	165	0.364	11.99	50.0	18.6	31.4	0.0
	2	Ov. No. 3 tr., 22.2 to 9.5 mm...	24x36	7.94	1.65	174	0.345	9.11	45.6	24.5	25.5	4.4
	4	Ov. No. 5 tr., 5 to 2.5 mm.....	18¾x38¾	2.59	1.06	180	0.333	6.51	49.35	19.5	28.0	3.15
	5	1st sp. No. 1 hy. cl., 2.5 mm. to 0	18¾x38¾	2.59	0.75	193	0.311	1.71	50.0	44.5	5.5	0.0
	8	4th sp. same, 2.5 mm. to 0.....	18¾x38¾	1.47	0.30	193	0.311	6.79	45.25	16.65	28.6	9.5
39	1	From No. 1 tr., 54.0 to 38.1 mm.	24x48	9.53	4.25	140	0.429	13.92	44.9	15.4	33.3	6.4
	2	From No. 2 tr., 38.1 to 15 mm...	24x48	8.0	4.15	140	0.429	10.55	48.45	17.05	33.0	1.5
	3	Ov. No. 3 tr., 15 to 8.5 mm.....	17x30	3.58	2.20	140	0.429	9.68	44.0	25.0	25.0	6.0
	4	Ov. No. 4 tr., 8.5 to 4.5 mm.....	15x31	2.67	2.00	160	0.375	7.92	41.7	28.55	20.25	9.5
	5	1st sp. No. 1 hy. cl., 4.5 mm. to 0	15x31	2.67	1.15	180	0.333	4.74	51.4	12.15	33.75	2.7
	6	2d sp. same, 4.5 mm. to 0.....	15x31	2.13	1.20	180	0.333	3.87	45.23	26.13	20.3	8.33
	7	1st sp. No. 2 hy. cl., 4.5 mm. to 0	15x31	1.52	0.48	200	0.300	2.15	46.23	10.7	34.13	8.97
	8	2d sp. same, 4.5 mm. to 0.....	15x31	1.04	0.30	210	0.286	1.44	46.5	18.65	30.35	4.55
40	2	Ov. No. 3 tr., 7 to 4.5 mm.....	23x35	5.69	1.05	160	0.375	6.64	41.8	24.23	25.27	8.7
	4	Sp. No. 1 hy. cl., 3 mm. to 0....	23x35	1.30	0.57	210	0.286	4.81	42.93	38.0	9.53	9.53
		Crank-arm Accelerated Jigs.										
27	5	Ov. No. 5 tr., 10.3 to 8.3 mm.....	16x24	1.57	1.38	130	0.462	8.95	33.3	37.33	22.53	6.83
28	1	From No. 1 tr., 40 to 2.5 mm....	18x34	4.75	2.40	96	0.624	9.66	25.5	24.5	5.3	44.7
	2	From No. 1 tr., 25 to 16 mm....	18x34	4.75	2.08	105	0.571	13.25	26.3	25.0	46.0	2.6
	3	Ov. No. 3 tr., 16 to 12 mm.....	18x29	4.75	1.52	121	0.496	10.40	27.0	31.0	33.8	8.2
	4	Ov. No. 4 tr., 12 to 8 mm.....	18x29	3.18	1.38	123	0.488	8.73	28.6	32.8	25.8	12.8
	5	Ov. No. 5 tr., 8 to 5 mm.....	18x29	3.18	1.18	132	0.455	11.76	23.5	35.3	25.0	16.2
	6	Ov. No. 6 tr., 5 to 3.5 mm.....	18x29	1.04	1.07	138	0.435	10.70	31.4	28.6	30.0	10.0
	7	Ov. No. 7 tr., 3.5 to 2 mm.....	18x29	0.89	0.80	133	0.451	7.53	25.7	48.5	18.2	7.6
	8	Ov. No. 9 tr., 3.5 to 2 mm.....	18x29	1.04	0.70	133	0.451	6.94	25.8	33.9	37.0	3.2
	9	1st sp. No. 1 hy. cl., 2 mm. to 0.	18x29	3.18	0.50	135	0.444	4.45	31.8	48.4	4.5	15.2
	10	2d spigot of same, 2 mm. to 0..	18x29	3.18	0.35	141	0.426	2.77	34.6	48.6	2.8	13.9
	11	3d spigot of same, 2 mm. to 0..	18x29	1.04	0.32	163	0.368	4.36	34.5	56.3	0.0	9.1
	12	4th spigot of same, 2 mm. to 0.	18x29	1.04	0.28	180	0.333	3.38	24.2	50.0	0.0	25.8
		Collom Accelerated Jigs.										
42	2	1st sp. No. 1 hy. cl., 6.4 mm. to 0	22x34	4 mesh.	.....	.....	.....	3.89	30.43	24.0	42.63	2.97
	3	2d spigot of same, 6.4 mm. to 0	22x34	8 mesh.	.....	.....	.....	3.95	31.2	31.2	32.4	5.2
	4	3d spigot of same, 6.4 mm. to 0	22x34	10 mesh.	.....	.....	.....	3.03	28.85	24.35	46.8	0.0
	5	4th spigot of same, 6.4 mm. to 0	22x34	12 mesh.	.....	.....	.....	3.36	27.97	25.8	44.8	1.43
44	1	Battery residue of steam stamp 76.2 mm. to 0.....	22x34	12.7	0.71	128	0.469	5.67	34.2	11.67	50.0	4.13
	2	1st sp. No. 1 hy. cl., 4.76 mm. to 0	22x34	2.29	0.50	134	0.448	4.80	30.17	14.2	52.0	3.67
	6	2d h. No. 2 jig, 1.73 mm. to 0...	22x34	1.73	0.35	134	0.448	4.83	26.67	5.0	68.33	0.0

(a) This is the velocity during pulsion, expressed in inches per second,

ever, as shown in Table 313, the following important differences between the plain eccentric and the accelerated jig, seem to appear:

TABLE 313.—AVERAGES FROM TABLE 312.

Kind of Jig.	Average Percentage of Stroke for Pulsion.	Return.	Suction.	Idleness.
Plain eccentric.....	45.16	24.13	24.61	6.11
Crank-arm accelerated.....	28.63	38.48	19.30	13.55
Collom accelerated.....	29.93	19.46	48.14	2.49

(1) In the accelerated jig, the sum of the times spent in periods of return and suction, is 10 to 20% greater than in the plain eccentric jig, and therefore, the water is passing down through the sieve at a much more gentle velocity. The accelerated jig draws almost as much water down as the plain eccentric jig, but

it draws it down at a gentle velocity which has less tendency to "felt" the sand together in a hard cake, and has less tendency to blind the sieve. The harsher suction of the eccentric jig may of course be softened by the free use of hydraulic water where that is abundant. In reality the hydraulic water lessens suction a little more in the accelerated jig than in the plain eccentric.

(2) The time for pulsion in the accelerated jigs is about 15% less, and, consequently, the velocity of pulsion is decidedly higher than in the plain eccentric. There is no advantage in this of itself; in fact if extreme speed is given to the jig, there is a decided disadvantage, as it both shortens the time of pulsion and racks the machinery.

(3) The time of idleness is about 5% larger in the crank-arm accelerated jigs than in the plain eccentric jigs.

(4) Pulsion is not free settling. The velocities in Table 312 demonstrate the fact that the law of free-settling particles has no bearing upon jigging, unless it may apply in the case of a few stray, floating grains on the surface of the finest jigs; for, on the one hand, the current was in no case strong enough to lift the particles according to the free-settling law, and, on the other hand, the particles were not under free-settling conditions, even if the current had been strong enough.

Bibliography for Chapters XIV. and XV.*

1. Bilharz, O., (1896), "Mech. Aufbereitung," Vol. I., pp. 44-48, 58, 87. *Heberwäsche.* Harz jig. Bilharz rectangular, movable sieve jig. Movable sieve hand jig. Bilharz fixed and movable sieve circular jigs.
2. Callon, J., (1886), "Mining," Vol. III., pp. 76-90, 100. Theory. Movable sieve hand and machine jigs. Harz jigs.
3. Davies, D. C., (1886), "Metal. Min. & Mining," p. 363. History. Movable sieve and Harz jigs.
4. Davies, E. H., (1894), "Mach. Metal. Mines," p. 281. Movable sieve hand jigs. Harz jigs. Bilharz rectangular and circular movable sieve jigs.
5. Egleston, T., (1887), "Metallurgy," Vol. I., p. 469. The use of jigs for treating tailings at the Tombstone stamp mill.
6. Eissler, M., (1896), "Metallurgy Gold," p. 159. Green's movable sieve jig.
7. *Ibid.*, (1891), "Metallurgy Silver," p. 241. Harz, Collom and other fixed sieve jigs.
8. Foster, C. Le N., (1894), "Ore and Stone Mining," pp. 570, 577. Theory. Harz jig. *Heberwäsche.*
9. Gaetzschmann, M. F., (1864), "Aufbereitung," Vol. I., p. 140; Vol. II., p. 1. Elaborate article on both fixed and movable sieve jigs.
10. Goupillière, Haton de la, (1885), "Exploitation des Mines," Vol. II., p. 725. Theory. Movable sieve and fixed sieve jigs of several types.
11. Hunt, R., (1884), "British Mining," pp. 694, 757. History. Harz jig. Argall's jig. Collom's jig. Circular slime jig.
12. Kirschner, L., (1899), "Erzaufbereitung," Part II., pp. 23, 74. Movable sieve hand jig. Harz jig for coarse and fine work. Bilharz rectangular and circular moveable sieve jigs.
13. Kunhardt, W. B., (1893), "Ore Dressing," pp. 26, 68, 92. Harz jigs for coarse and fine work. Theory. Comparisons with other machines.
14. Lamprecht, R., (1888), "Kohlenaufbereitung," pp. 47, 50, 59. Various types of coarse and fine jigs for coal.
15. Linkenbach, C., (1887), "Aufbereitung der Erze," pp. 62, 86. Theory. Harz jigs for both coarse and fine work.
16. Lock, A. G., (1882), "Gold," p. 1082. Comparison of Harz and Bradford jigs on gold ore.
17. Rittinger, P. R. von, (1867), "Aufbereitungskunde," pp. 165, 270. Theory. Movable sieve jigs. Fixed sieve jigs with side plungers and under plungers. *Setzpumpe.*
18. *Ibid.*, (1870), "Erster Nachtrag," pp. 18, 49. Theory. *Setzpumpe.* Harz jig.
19. *Ibid.*, (1873), "Zweiter Nachtrag," p. 32. Theory. Harz jigs for coarse and fine work. Movable sieve jig.
20. Rose, T. K., (1894), "Gold," p. 181. Harz jigs.
21. Sparre, J. von, (1869), Criticisms of Rittinger's theory.

* For Pneumatic jigs, see Chapter XVIII., on Miscellaneous Processes.

22. *Am. Inst. Min. Eng.*, Vol. II., (1873), p. 31. H. Engelmann. Discussion of air versus water jigging. Description of Utsch side plunger jig which has a sloping sieve and cross partitions beneath which the stuff moves forward, the lighter top stuff being drawn off between each partition. Capacity, water used and results obtained.
23. *Ibid.*, Vol. V., (1877), p. 593. C. M. Rolker. Detailed description of the Collom jig and the work done by it at Lake Superior.
24. *Ibid.*, Vol. VI., (1877), p. 484. J. C. F. Randolph. Description, adjustments, capacity, etc., of Harz jigs used at Clausthal on various sizes of material.
25. *Ibid.*, Vol. VIII., (1880), p. 409. H. S. Munroe. Discussion of the losses in jigging native copper at Lake Superior, with figures on capacity and number of strokes.
26. *Ibid.*, Vol. IX., (1881), p. 420. Ellis Clark, Jr. Various details of construction, adjustments and power for Harz jigs working different sizes of stuff at Przibram; also of a movable sieve jig.
27. *Ibid.*, p. 468. S. Stutz. Theoretical discussion of water separation. Description of several forms of coal jigs with sloping sieves, plungers driven by a cam, and valves so arranged as to prevent any suction. Figures on capacity and water used.
28. *Ibid.*, Vol. XII., (1884), p. 497. S. Stutz. A few improvements are given on the coal jigs of the previous article and the advantages of the same.
29. *Ibid.*, Vol. XIII., (1884), p. 35. A. F. Wendt. Description, capacity and power of a Wendt jig which is a side plunger jig having an accelerated motion through a pair of elliptic gears.
30. *Ibid.*, Vol. XVI., (1888), p. 609. F. S. Ruttmann. Detailed description, capacity and water used on the Conkling movable sieve jig.
31. *Ibid.*, Vol. XVII., (1889), p. 637. H. S. Munroe. Result of experiments to determine the effect of interstitial currents on separation by jigs and discussion of the closeness of sizing needed.
32. *Ibid.*, p. 669. H. S. Munroe. Description of Parson's jigs used at Bonne Terre with adjustments, capacity, water used, sizing tests, discussion of the quality of their work and comparison with Collom jigs at Lake Superior; also sizing tests and adjustments of Harz jigs.
33. *Ibid.*, Vol. XVIII., (1889), p. 257. H. E. Armitage. A few notes on the adjustments of jigs.
34. *Ibid.*, Vol. XIX., (1890), p. 420. E. B. Coxe. Detailed description of Luhrig coal jig as used at Drifton, Pennsylvania. It is a sliding block, accelerated, fixed sieve jig, fed at the longitudinal partition and discharging coal mechanically over the side.
35. *Ibid.*, Vol. XXII., (1893), p. 326. Jas. Douglas. Statement that Harz jig is most popular.
36. *Ibid.*, p. 569. W. P. Blake. Results obtained from the application of jigs to the treatment of roasted blende and pyrite.
37. *Ibid.*, Vol. XXIV., (1894), p. 80. F. M. F. Cazin. Theoretical discussion of jigging. Description of Cazin's circular jig which has an annular sieve and a central plunger, both divided into eight independent sections. The ore is fed on one section and from thence the lighter part passes around one way over the tail boards of three sections in succession and is discharged, while the heavier part passes around the other way under the tail boards of four sections in succession and is discharged.
38. *Ibid.*, p. 409. R. H. Richards. Results of experiments to determine the laws of jigging.
39. *Ibid.*, p. 486. P. G. Lidner. Sizes of feed and adjustments for jigs in Sweden.
40. *Ibid.*, Vol. XXVI., (1896), pp. 3, 1034. R. H. Richards. Indicator cards of various jigs throughout the country.
41. *Ibid.*, p. 278. E. G. Tuttle. Description of an arrangement for tail discharges on all the sieves of a Harz jig.
42. *Ibid.*, p. 284. E. G. Tuttle. Description of an arrangement for double discharge on the tail of a jig.
43. *Ibid.*, p. 623. C. W. Goodale. Discussion of the losses in jig tailings at Butte and the causes thereof.
44. *Am. Mfr.*, Vol. XLIV., (1899), Jan. 18. No author. Description of the Diescher coal jig which has its piston beneath the sieve and valves in the hutch to prevent suction. Capacity and cost are given.
45. *Ibid.*, Vol. XLIX., (1891), July 3, p. 15. No author. Description of McLanahan's ore jig with fixed sieves, circular side pistons, and valves in the hutches to prevent suction.
46. *Ibid.*, Vol. LIV., (1894), p. 915.

47. *Ann. des Mines*, Series VI., Vol. XIX., (1871), pp. 317, 334., A. Henry. General article on practice in Belgium and the Rhenish provinces, describing various forms of jigs and discussion of their adjustments, capacities, etc.
48. *Ibid.*, Series VII., Vol. II., (1872), p. 130. A. Pernolet. Detailed description and results obtained by the Rexroth coal jig, which is a side plunger jig with water introduced below the plunger and valves to prevent suction; also of the Siever coal jig and of the Lamarche and Schwarz jig for fine coal, which uses a quartz bed.
49. *Ibid.*, p. 271. A. Henry. Description of Harz eccentric jigs used at Przibram, with adjustments, water, capacity and power.
50. *Ibid.*, Vol. VII., (1875), p. 244. E. Sauvage. Description of the Plumb circular movable sieve jig for coal.
51. *Ibid.*, Vol. XI., (1877), p. 271. M. Oppermann. Description and capacity of the Harz jig at Ämmeberg, Sweden. Principles of action of the Utsch jig and comparisons with the Harz jig.
52. *Ibid.*, Series VIII., Vol. XX., (1891), pp. 37, 41. M. Bellom. A somewhat general article which discusses the method of running jigs, the number of compartments, the forms of discharges and compares jigs and tables.
53. *Berg. u. Hütt. Jahrb.*, Vol. XXVII., (1879), p. 158. J. Habermann. Results of comparative tests made on fine jigs and Salzburg tables with respect to capacity, power, cost and amount of extraction.
54. *Ibid.*, Vol. XXVIII., (1880), p. 1, J. Habermann. Elaborate article describing various piston mechanisms.
55. *Berg. u. Hütt. Zeit.*, Vol. XXXI., (1872), p. 189. F. Cazin. Description and adjustments of Cazin's side piston jig.
56. *Ibid.*, Vol. XXXII., (1873), p. 127. C. Blömeke. Description and dimensions of the Braun sliding block piston jig, with semi-cylindrical hutch; also of a Harz eccentric jig. Figures on water and capacity for both.
57. *Ibid.*, pp. 325, 383, 443. . A. Pernolet. Same as *Ann. des Mines*, Series VII., Vol. II., p. 115.
58. *Ibid.*, Vol. XXXIII., (1874), p. 169. C. Blömeke. Description, dimensions, adjustments and capacities of four forms of fixed sieve side plunger eccentric jigs.
59. *Ibid.*, p. 253. No author. Description of the Utsch jig with capacity and discussion of its merits and advantages over air jigs.
60. *Ibid.*, Vol. XXXV., (1876), p. 249. M. E. Sauvage. Description of the Plumb circular movable sieve jig for coal.
61. *Ibid.*, Vol. XLI., (1882), p. 219. C. Blömeke. Adjustments of jigs at Lintorf, separating galena, blende, pyrite and gangue.
62. *Ibid.*, p. 447. O. Bilharz. Description, dimensions and capacity of the Bilharz circular fixed sieve jig with central plunger.
63. *Ibid.*, Vol. XLIV., (1885), p. 5. E. Koch. Adjustments of jigs at Gottesgabe and Hammerwäsche mills in Westphalia.
64. *Ibid.*, p. 145. C. Blömeke. Description, capacity and water used by the Bilharz circular fixed sieve jig and by the Schranz movable sieve power jig.
65. *Ibid.*, Vol. XLVII., (1888), p. 419. O. Hoppe. Comparison of a jig bed to the valves of a lifting pump.
66. *Ibid.*, Vol. L., (1891), pp. 324, 332. C. Blömeke. Similar to *A. I. M. E.*, Vol. XVII., p. 637.
67. *Ibid.*, Vol. LI., (1892), p. 188. No author. Description of the Bilharz oblong movable sieve jig and the Bilharz circular movable sieve jig.
68. *Ibid.*, Vol. LIII., (1894), pp. 141, 167. C. Blömeke. Sizes of material fed to jigs in Aurora and Dörnberg mills in Westphalia.
69. *Ibid.*, Vol. LIV., (1895), p. 202. No author. Description of the Otto Abeling mechanism.
70. *Bull. Soc. Ind. Min.*, Series I., Vol. XV., (1870), p. 437. G. Clerc. Theory of separation by jigs and discussion of the various methods of jigging.
71. *Ibid.*, p. 549. F. Robert. Article on Huet and Geyler's jig.
72. *Ibid.*, Series II., Vol. VIII., (1879), pp. 133, 276, 387, 441. J. B. Marsaut. Discussion of theory of separation by jigs; description of machines used at various jigging plants and the results obtained.
73. *Ibid.*, Series III., Vol. III., (1889), pp. 329, 338. M. Evrard. Details of construction and action of two coal jigs, one a fixed sieve jig with piston run by hand; the other a fixed sieve power jig with a pushing block feeder and an apparatus for moving the top of the bed forward mechanically instead of by a carrying current of water.
74. *Ibid.*, Vol. VIII., (1894), p. 531. Ch. Mouchet. Adjustments of Harz jigs in the Vaucron mill.
75. *Can. Min. Rev.*, Vol. XIV., (1895), p. 169. Similar to *Eng. & Min. Jour.*, Vol. LX., p. 195.

76. *Coll. Eng.*, Vol. X., (1890), p. 266. Report of Committee of *Min. Inst.* of Scotland, giving a description of the Sheppard coal washer which is a fixed sieve, side plunger jig in which suction is prevented by valves connecting the hutch with the compartment into which the coal and water fall.
77. *Ibid.*, Vol. XVII., (1896-7), p. 62. H. K. Landis. Description and method of working of movable sieve intermittent power jigs used at Friedensville, Pa.
78. *Ibid.*, p. 163. F. W. Hardwick. Principles of action and usual adjustments of coal jigs. Description, adjustments and advantages of the Baum jig.
79. *Ibid.*, p. 240. No author. Description and capacity of Stroh's continuous movable sieve coal jig.
80. *Ibid.*, p. 310. H. K. Landis. Description of hand jigs and Harz jigs in Southwest Missouri and adjustments of the same for jigging blende.
81. *Ibid.*, pp. 393, 432. H. Van F. Furman. A general article on jigs, taking up the various details of construction and adjustment, their applicability to different classes of work, with figures on capacity, power, etc.
82. *Coll. Guard.*, Vol. LXVII., (1894), p. 784. A. Habets. Description of the Baum jig for coal which uses compressed air to pulsate the water, instead of a piston.
83. *Ibid.*, Vol. LXVIII., (1894), p. 592. Same as *A. I. M. E.*, Vol. XXIV., p. 80.
84. *Ibid.*, p. 670. Same as *A. I. M. E.*, Vol. XXIV., p. 486.
85. *Ibid*, Vol. LXXI., (1896), p. 176. Same as *Rev. des Mines*, Series III., Vol. XXXI., p. 166.
86. *Ibid.*, Vol. LXXII., (1896), p. 883. Description and method of working the Baum jig for coal.
87. *Ibid.*, Vol. LXXIII., (1897), p. 826. Abstract of *Comptes Rendus*, (1896), p. 113.
88. *Col. Sci. Soc.*, (1887), Bull. No. 7. H. A. Vezin. Discusses the use of an intermediary jig.
89. *Comptes Rendus Soc. Ind. Min.*, (1891), p. 241. Mr. Grey. Description, capacity and quality of work of a side piston jig used at Karwin for extracting pyrite from schists from coal washing.
90. *Ibid.*, (1896), pp. 113, 137. P. E. Maurice. Mathematical discussion of the motion of particles in a liquid with special reference to jigs.
91. *Dingler's Polyt. Jour.*, Vol. CCXVII., (1875), p. 374. No author. Description and results given by Evrard's coal jig.
92. *Engineering*, Vol. XXIX., (1880), pp. 4, 41, 84, 121, 202, 259. Same as *Bull. Soc. Ind. Min.*, Series II., Vol. VIII., p. 387.
93. *Ibid.*, Vol. XXXII., (1881), p. 329. No author. Description and adjustments of fixed sieve jigs used at Lintorf.
94. *Ibid.*, Vol. LVIII., (1894), p. 294. No author. Description of the Ferraris jig used at Monteponi.
95. *Eng. & Min. Jour.*, Vol. XIII., (1872), p. 177. F. M. Stapff. Description, capacity and power of the Stapff jig, which is a pulsion jig with the piston below the screen and valves in the piston to prevent suction. Piston is worked by a cam and lever and weight.
96. *Ibid.*, Vol. XV., (1873), p. 33. No author. Description of Cazin's side piston jig with three sieves and one plunger which is hinged beyond the tail end and actuated by eccentric and a connecting rod at the other end.
97. *Ibid.*, pp. 177, 385. } Same as *A. I. M. E.*, Vol. II., p. 31.
98. *Ibid.*, Vol. XVI., (1873), p. 296. }
99. *Ibid.*, Vol. XXII., (1876), p. 88. E. D. Meier. Short theoretical discussion of jigging, with a description of the Osterspey jig which has a side plunger with valves in it to prevent suction. Capacity, water used, adjustments and quality of its work when jigging coal, are given.
100. *Ibid.*, Vol. XXIII., (1877), pp. 274, 294, 314, 335. Same as *A. I. M. E.*, Vol. V., p. 593.
101. *Ibid.*, Vol. XXV., (1878), p. 130. Same as *A. I. M. E.*, Vol. VI., p. 484.
102. *Ibid.*, Vol. XXXII, (1881), p 216. Abstract of *A. I. M. E.*, Vol. IX., p. 431.
103. *Ibid.*, p. 389. No author. Description, capacity and power of Rogers jig which has a door formed plunger suspended from hinges above and with valves in it to prevent suction.
104. *Ibid.*, Vol. XXXIV., (1882), p. 306. No author. Adjustments of jigs in the Hecla mill at Glendale, Montana.
105. *Ibid.*, Vol. XLIII., (1887), p. 8. No author. Description, capacity and advantages of the *heberwäsche* used at Mechernich.
106. *Ibid.*, Vol. XLV., (1888), p. 416. Same as *A. I. M. E.*, Vol. XVI., p. 609.
107. *Ibid.*, Vol. XLVII., (1889), p. 588. Same as *A. I. M. E.*, Vol. XVII., p. 669.
108. *Ibid.*, Vol. XLIX., (1890), p. 357. Abstract of *A. I. M. E.*, Vol. XVII., p. 637.
109. *Ibid.*, p. 443. C. E. Dewey. Sizing tests of jig products.

110. *Ibid.*, Vol. LVII., (1894), p. 607. No author. Description of the Otto Abeling mechanism for lifting the plunger slowly by a cam and letting it fall rapidly by gravity.
111. *Ibid.*, Vol. LVIII., (1894), p. 9. G. T. Cooley. Description of the jigs used for blende in Southwest Missouri, with adjustments, capacity and water used.
112. *Ibid.*, p. 293. Same as *Engineering*, Vol. LVIII., p. 294.
113. *Ibid.*, p. 392. J. R. Holibaugh. Dimensions and method of operation of hand jigs in Missouri.
114. *Ibid.*, Vol. LX., (1895), p. 195. F. Hille. Sizes of material to be fed to jigs with five compartments separating blende, galena, pyrite and quartz, and a list of products of each compartment.
114a. *Ibid.*, Vol. LXVI., (1898), p. 248. T. J. Greenway. Description of May's fixed sieve jig and the Hancock movable sieve jig used at Broken Hill, New South Wales.
115. *Inst. Civ. Eng.*, Vol. LXX., (1882), p. 157. J. B. Marsaut. Theory of separation by jigs.
116. *Ibid.*, Vol. CXIV., (1892-3), p. 132. M. B. Jamieson and J. Howell. Adjustments of Collom jigs at Broken Hill, Australia.
117. *Ibid.*, Vol. CXVI., (1894), pp. 27, 43. R. E. Commans. General article on jigs, entering well into details.
118. *Min. Ind.*, Vol. V., (1896), pp. 158-9. R. Cremer. Short description and discussion of the merits of Baum and Sheppard jigs used for coal.
119. *Mines and Minerals*, Vol. XVIII., (1897-8), p. 482. E. Hedburg. Description and results obtained with hand jigs and Cooley fixed sieve jigs in Southwest Missouri.
120. *Min. & Sci. Press*, Vol. LXIII., (1891), p. 56. Abstract of *A. I. M. E.*, Vol. XIX., p. 420.
121. *Ibid.*, Vol. LXXIV., (1897), p. 408. Ph. Reardon. A few notes on the construction of jigs.
122. *Ibid.*, Vol. LXXV., (1897), p. 98. E. B. Kirby. Short description of the action of a jig and discussion of the different methods of running to suit various classes of feed material.
123. *Oest. Zeit.*, Vol. XXXIV., (1886), p. 363. No author. Description, dimensions, capacity and water used on the Bilharz circular fixed sieve jig.
124. *Ibid.*, p. 653. E. Ferraris. Description and capacity of two forms of Harz jigs used at Monteponi. One has a mechanical stay box for coarse concentrates, while the other has a central pipe discharge for tailings and a double tail discharge for coarse concentrates.
125. *Ibid.*, Vol. XXXVIII., (1890), p. 214. O. Bilharz. Description, capacity, etc., of the Bilharz movable sieve jigs, both the oblong and circular forms.
126. *Ibid.*, Vol. XLIV., (1896), p. 144. Same as *Rev. des Mines*, Series III., Vol. XXXI., (1895), p. 166.
127. *Raymond's Rep.*, (1870), p. 702. W. P. Blake. Description of Wimmer's, Rittinger's, the Harz, and Huet and Geyler's jigs.
128. *Ibid.*, (1873), p. 434. W. P. Ward. Description of the Stapff and Cazin jigs as well as those described in the previous reference.
129. *Rev. des Mines*, Series III., Vol. XXXI., (1895), p. 166. No author. Description of the Francou jig for coal, which has a side piston raised by steam and falling by gravity and with valve under the piston to avoid suction. Advantages of free fall system over mechanical system.
130. *Sch. Mines Quart.*, Vol. IX., (1887-8), pp. 140, 278. Similar to *A. I. M. E.*, Vol. XVII., p. 637.
131. *Ibid.*, p. 145. G. W. Maynard and W. B. Kunhardt. Results of jigging tests on magnetic iron ore.
132. *Ibid.*, Vol. XIV., (1892-3), pp. 337, 340. Abstract from *Ann. des Mines*, Series VIII., Vol. XX., (1891), pp. 37, 41.
133. *Zeit. Berg. Hütt. u. Salinenwesen*, Vol. XXI., (1873), p. 85. E. Kutscher. Description of jigs used at Clausthal with the sizes of feed and adjustments corresponding thereto.
134. *Ibid.*, Vol. XXVIII., (1880), p. 214. Chr. Mosler. Description of the Collom jig and the amount of water used by it.
135. *Ibid.*, Vol. XXXIV., (1886), p. 44. E. Ferraris. Description of the Ferraris adjustable eccentric.
136. *Ibid.*, Vol. XLIII., (1895), p. 57. Kubale. Short description of the Sheppard coal jig.
137. *Ibid.*, p. 214. No author. Adjustments of jigs at Lautenthal for jigging blende.
138. *Zeit. Ver. Deut. Ing.*, Vol. XXX., (1891), pp. 588, 615. Köhler. Translation and comments on *A. I. M. E.*, Vol. XVII., p. 637.
139. *Ibid.*, p. 1213. O. Hoppe. Results of experiments on the effect of suction in a jig bed.
140. *Ibid.*, Vol. XXXI., (1892), p. 7. Descriptions of Evrard's coal jig, Lemières coal jig and the Bilharz fixed and movable sieve jigs.